Contract Provisions for:

NE 181st ST South Sidewalk Improvements

KENMORE PROJECT NO. 0189
KING COUNTY CDBG PROJECT NO. C15147

March 2016

Bid No: 16-C1517

City of Kenmore
18120 68th Avenue NE
PO Box 82607
Kenmore, Washington 98028-0607
Telephone (425) 398-8900

BID DOCUMENTS ONLY – NOT FOR CONSTRUCTION

Provided to Builders Exchange of WA, Inc. For usage Conditions Agreement see www.bxwa.com - Always Verify Scale

Contract Provisions for:

NE 181st ST South Sidewalk Improvements

KENMORE PROJECT NO. 0189
KING COUNTY CDBG PROJECT NO. C15147

March 2016

Bid No: 16-C1517

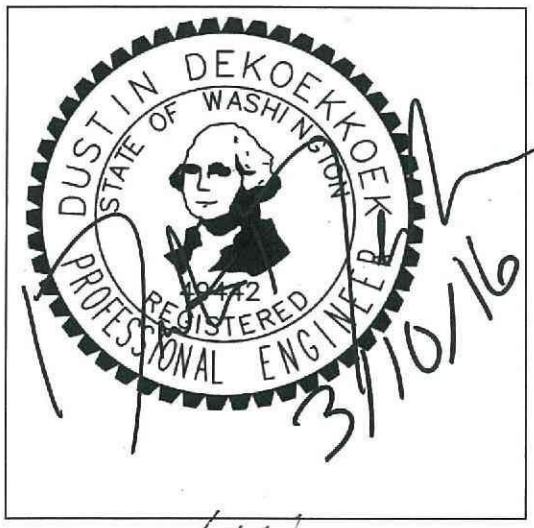

Prepared By:

Dustin DeKoekkoek, P.E.

Accepted by: 3/14/2016
City of Kenmore

BID DOCUMENTS ONLY – NOT FOR CONSTRUCTION

Provided to Builders Exchange of WA, Inc. For usage Conditions Agreement see www.bxwa.com - Always Verify Scale

TABLE OF CONTENTS

I. CALL FOR BIDS

II. INSTRUCTIONS TO BIDDERS
AND GENERAL CONTRACT TERMS AND CONDITIONS

III. BID DOCUMENTS

IV. AWARD DOCUMENTS

V. KING COUNTY SUPPLEMENTARY CDBG GENERAL CONDITIONS AND COMPLIANCE DOCUMENTS

VI. SPECIAL PROVISIONS

VII. STANDARD PLANS

VIII. AMENDMENTS TO STANDARD SPECIFICATIONS

IX. APPENDICIES

APPENDIX A
PREVAILING WAGE RATES
APPENDIX B
SITE IMPROVEMENT PERMITS
APPENDIX C
UTILITY AGREEMENTS
APPENDIX D
NORTHSHORE UTILITY DISTRICT 2014 ENGINEERING
SPECIFICATIONS – MATERIALS AND METHODS OF CONSTRUCTION

Provided to Builders Exchange of WA, Inc. For usage Conditions Agreement see www.bxwa.com - Always Verify Scale

I - CALL FOR BIDS

Provided to Builders Exchange of WA, Inc. For usage Conditions Agreement see www.bxwa.com - Always Verify Scale

CITY OF KENMORE CALL FOR BIDS

PROJECT NAME: NE 181st ST South Sidewalk Improvements
BID NUMBER: 16-C1517
BIDS DUE: March 29, 2016 at 2pm EXACTLY

Notice is hereby given that sealed Bids will be received by Kenmore City Clerk's Office at the Kenmore City Hall, 18120 68th Avenue NE, PO Box 82607, Kenmore, Washington, 98028. **Bids are due no later than 2:00:00 PM EXACTLY, Pacific local time**, according to the clock at the City's Front Reception Desk, **March 29, 2016**, at which time Bids will be opened and publicly read.

The City of Kenmore seeks a Contractor to furnish all labor, materials and equipment necessary to complete the project referenced above. **The Work shall include, but is not limited to, furnishing all labor, equipment, and materials necessary to construct approximately 700 linear feet of sidewalk on the south side of NE 181st ST between 68th Ave NE and 73rd Ave NE in the City's downtown area. Improvements include but are not limited to new curb and gutter, sidewalk, modular block wall, storm drainage, street trees and grates, irrigation, illumination system and utility conversion to underground, consistent with existing downtown improvements west of the project area.**

All Bidding shall be based upon compliance with the Contract Plans and Contract Provisions.

The estimated construction cost: $640,000.
Contract Working Days: 60

Plans, Specifications, Addenda, and the Bidders (Plan holder) list for this project may be viewed or ordered on-line from Builder's Exchange at http://www.bxwa.com. To access on-line, click on "bxwa.com", Posted Projects", "Public Works", "City of Kenmore", and "Project Bidding". Bidders must register with Builder's Exchange to be notified of Addendum and new documents on this project. The Bidders list is kept and maintained by the Builder's Exchange of Washington, Inc. Registration for the Bidders list can be made on-line, by phone 425-258-1303, or at Builder's Exchange, located at 2607 Wetmore Avenue, Everett, WA 98201. It is the Bidder's responsibility to check for Addenda and other new documents on-line. Plans, Specifications, and Addenda are also available for viewing only at the City of Kenmore City Hall.

All Bidders must certify that they are not on the Controller General's list of ineligible Contractors or on the list of parties excluded from Federal procurement or non-procurement programs.

The City expressly reserves the right to reject any or all Bids and the right to waive any informalities or irregularities and to further award the project to the lowest, responsive, responsible Bidder as it best serves the interest of the City.

Provided to Builders Exchange of WA, Inc. For usage Conditions Agreement see www.bxwa.com - Always Verify Scale

The City of Kenmore in accordance with Title VI of the Civil Rights Act of 1964, 78 Stat. 252, 42 U.S.C. 2000d to 2000d-4 and Title 49, Code of Federal Regulations, Department of Transportation, Subtitle A, Office of the Secretary, Part 21, Nondiscrimination in Federally-Assisted Programs of the Department of Transportation issued pursuant to such Act, hereby notifies all Bidders that it will affirmatively ensure that in any Contract entered into pursuant to this advertisement, disadvantaged business enterprises as defined at 49 CFR Part 26 will be afforded full opportunity to submit Bids in response to this invitation and will not be discriminated against on the grounds of race, color, national origin, or sex in consideration for an Award.

This project is financed through the King County Consortium Community Development Block Grant Program with funds obtained from the U.S. Department of Housing and Urban Development. The Contract will be subject to regulations of the Departments of Labor and Housing and Urban Development.

Attention is called to Federal provisions for Equal Employment Opportunity, HUD Section 3 requirements, and the minimum wages as set forth in the Contract Documents.

Published:

Seattle Times and Seattle Daily Journal of Commerce – **March 15, 2016**
March 22, 2016

Provided to Builders Exchange of WA, Inc. For usage Conditions Agreement see www.bxwa.com - Always Verify Scale

BXWA

II - INSTRUCTIONS TO BIDDERS AND GENERAL TERMS AND CONDITIONS

Provided to Builders Exchange of WA, Inc. For usage Conditions Agreement see www.bxwa.com - Always Verify Scale

INSTRUCTIONS TO BIDDERS AND GENERAL TERMS AND CONDITIONS

1. Standard Specifications: Bidding shall be in strict accordance with the 2014 Standard Specifications for Road, Bridge and Municipal Construction, issued by the Washington Department of Transportation (WSDOT), as modified or supplemented by the Special Provisions (hereafter, "Specification" or "Specifications"). Deletion, amendment, alteration or additions to any subsection or portion of the Standard Specifications shall pertain only to that particular portion of the section, and the balance shall continue to be in force. Bidders shall obtain these publications at the Bidder's own expense. The WSDOT Specifications can be found at http://www.wsdot.wa.gov/Publications/Manuals.

2. Interpretation of Contract Documents: No oral interpretations will be made to any Bidder as to the meaning of the Bid or Contract Documents; and any oral communication is not binding upon the City of Kenmore. Requests for an interpretation or questions must be directed via email to Kent Vaughan at kvaughan@kenmorewa.gov. Questions via phone or in person will not be accepted. Bidders shall submit questions no later than **March 24, 2016**. Any interpretation deemed necessary by the City will be in the form of an Addendum to the Bid documents.

   Addendums will be posted on the Builder's Exchange website, http://www.bxwa.com. Bidders must be registered with the project on the Builder's Exchange to receive notification of any Addendum issues. All such Addenda shall become part of the Bid Specifications. Where a response or Addendum from the City cannot be obtained prior to the Bid opening, it is understood that the Bidder has made provisions for a more costly method before submitting the Bid. Where conflicts or omissions occur in Plans, Specifications, or other related Contract Documents, Bidders shall assume the more stringent requirements and verify with the City before beginning Work.

3. Addenda: No alteration or modification of the terms and conditions of these Contract Documents will be binding unless included in a written Addendum issued and approved by the City. Bidders are responsible for checking the City of Kenmore link on the Builder's Exchange website for the issuance of any Addenda prior to submitting a Bid. Bids shall reflect performance according to the Addenda. No Bid Bond shall be released for failure to consider Addenda. Receipt of Addenda to the Bid documents by a Bidder must be acknowledged on the Bid Form. Failure to acknowledge receipt of any Addenda shall not relieve the Bidder from fulfilling all of the requirements of the Contract and may be considered an irregularity in the Proposal.

4. Signature: Each Bid must be signed in longhand by the Bidder with the Bidder's usual signature. Bids by partnership must be signed by one of the managing partners, followed by the partner's printed name. Bids by corporations must be signed by an officer having authority to sign, followed by the officer's printed name and position.

Provided to Builders Exchange of WA, Inc. For usage Conditions Agreement see www.bxwa.com - Always Verify Scale

Note: Any correction to a Bid made by interlineation, alteration or erasure shall be initialed by the person signing the Bid.

5. Non-Collusion: By submitting the Non-Collusion Declaration, the Bidder certifies that the Bid is non-collusive, is not made in the interest of any person not named, and that the Bidder has not induced or solicited others to submit a sham offer, or to refrain from proposing. Failure to submit the declaration with the Bid will result in the Bid being non-responsive.

6. Submission of Bids: To receive consideration, Bids must be submitted prior to the specified time for opening, in a sealed envelope, clearly marked with company name, address, telephone number, Bid number, title of Bid, and time of opening to:

   The Office of the Kenmore City Clerk
   18120 68th Avenue NE
   P.O. Box 82607
   Kenmore, Washington 98028-0607

   Bidders assume the risk for the method of delivery chosen. The City assumes no responsibility for delayed delivery. No oral, telephonic, email or facsimile Bids or modifications will be accepted. Any Bid or modification of a Bid received at the City of Kenmore after the stated time and date for the Bid closing will not be accepted or considered.

   Bids remain confidential until Bid opening after which Bids are considered a public record subject to public disclosure under Chapter 42.56 RCW. Bidder shall mark as "proprietary" any information that Bidder believes meets the exemption under RCW 42.56.270(1). This assertion of proprietary information will be considered by the City in response to public records requests. Bid results will be made available as soon as practical following the Bid opening. Bid results may be viewed on-line at the City of Kenmore link on the Builder's Exchange website: http://www.bxwa.com and also at the City of Kenmore website: http://www.cityofKenmore.com, click on "Kenmore In Action", "Departments", "Finance & Administration", "Bid Opportunities".

7. Bid Price: The Bid price shall include everything necessary to perform and complete the Contract, including, but not limited to, furnishing all materials, equipment, tools, transportation, plant and landscape material, and other facilities, and all management, superintendent's labor and service, except as may be provided otherwise in the Contract Documents. The Bid shall remain in effect for forty-five (45) calendar days after the Bid opening. See Standard Specifications Section 1-03.1 for additional information.

8. Bid Proposal: Proposals are to be submitted only on the forms provided with these Contract Provisions. Substitutions will not be accepted. Accompany each Bid with a certified check, cashier's check, or Surety company Bid Bond, on a form acceptable to

Provided to Builders Exchange of WA, Inc. For usage Conditions Agreement see www.bxwa.com - Always Verify Scale

the City, from State-licensed Surety Company as Surety, in an amount not less than five percent (5%) of the Bid amount, payable to the City of Kenmore. Incomplete Proposals and Proposals received after the time fixed for the opening will not be considered. Faxed responses are not acceptable.

9. Withdrawing of Bid: Bids may not be withdrawn after opening.

10. Bid Results: Bid results shall be posted on the City of Kenmore and on the Builder's Exchange websites.

11. Indemnification/Hold Harmless: The Contractor shall defend, indemnify and hold the City and its officers, agents, officials, employees, and volunteers harmless from any and all claims, injuries, damages, losses or suits including attorney fees, costs, and expenses arising out of or in connection with the performance of the Contract.

    This Contract is subject to RCW 4.24.115. In the event of liability for damages arising out of bodily injury to persons or damages to property caused by or resulting from the concurrent negligence of the Contractor and the City, its officers, officials, employees and volunteers, the Contractor's liability hereunder shall be only to the extent of the Contractor's negligence. It is further specifically and expressly understood that the indemnification provided herein constitutes the Contractor's waiver of immunity under Industrial Insurance, Title 51 RCW, solely for the purposes of this indemnification. This waiver has been mutually negotiated by the parties. The provisions of this Section shall survive the expiration or termination of the Contract

12. Taxes: Taxes are to be paid by the City as indicated on the Bid Proposal Sheet. Where no line item is provided for Washington State Sales Tax, Rule 171 (WAC 458-20-171) applies. All questions concerning applicable taxes on any portion of the Work should be directed by the Contractor to the State of Washington Department of Revenue or the local taxing authority.

13. Low Responsible Bidder: It is the intent of the City to Award a Contract to the low responsible Bidder. Before Award, the Bidder must meet the following State responsibility criteria and, if applicable, supplemental responsibility criteria to be considered a responsible Bidder. The Bidder is required to submit documentation demonstrating compliance with the criteria.
    A. State Responsibility Criteria. The Bidder must meet the following State responsibility criteria:
        1) At the time of Bid submittal, have a current certification of registration in compliance with Chapter 18.27 RCW.
        2) Have a current Washington State Unified Business Identifier (UBI) number.
        3) Not be disqualified from Bidding on any Public Works Contract under RCW 39.06.010 or 39.12.065(3).
        4) If applicable:

Provided to Builders Exchange of WA, Inc. For usage Conditions Agreement see www.bxwa.com - Always Verify Scale

a) Have Industrial Insurance (workers' compensation) coverage for the Bidder's employees working in Washington State, as required in Title 51 RCW;

b) Have a Washington State Employment Security Department number, as required in Title 50 RCW; and

c) Have a Washington State Department of Revenue State excise tax registration number, as required in Title 82 RCW.

5) For Contracts $1,000,000 or over, the Bidder must not have violated the "Off-Site Prefabricated Non-Standard Project Specific Items" reporting requirements more than one time, as determined by the Department of Labor and Industries.

B. Supplemental Bidder Responsibility Criteria. If supplemental criteria apply to this project, the criteria are included in Special Provisions Section 1-02.14. Any modifications to the supplemental criteria shall be at the sole discretion of the City and made by Addenda prior to Bid opening as set forth in Section 3.

14. Subcontractor: For Contracts that are expected to cost one million dollars or more, the Bidder shall submit as part of the Bid, or within one hour after the published Bid submittal time, the names of the Subcontractors with whom the Bidder, if awarded the Contract, will subcontract for performance of the Work of HVAC (heating, ventilation and air conditioning), plumbing (RCW, Chapter 18.106) and electrical (RCW, Chapter 19.28) or to name itself for the Work. The Bidder shall not list more than one Subcontractor for each category of Work identified, unless Subcontractors vary with Bid alternates, in which case the Bidder must indicate which Subcontractor will be used for which alternate. Failure of the Bidder to submit as part of the Bid the names of such Subcontractors or to name itself to perform such Work or the naming of two or more Subcontractors to perform the same Work shall render the Bidder's Bid nonresponsive and, therefore, void.

15. Bid Protest: Per RCW 39.04.105, if the City receives a written protest from a Bidder for a Public Works project which is the subject of competitive Bids, the City shall not execute a Contract for the project with anyone other than the protesting Bidder without first providing at least two full business days' written notice of the City's intent to execute a Contract for the project; provided that the protesting Bidder submits notice in writing of its protest no later than two full business days following Bid opening. Intermediate Saturdays, Sundays, and legal holidays are not counted.

Any protest submittal shall be delivered to:

City of Kenmore
City Clerk
18120 68th Avenue NE
P.O. Box 82607
Kenmore, Washington 98028-0607

Provided to Builders Exchange of WA, Inc. For usage Conditions Agreement see www.bxwa.com - Always Verify Scale

The words "Bid Protest" along with the Bid number and title shall be written prominently and clearly displayed on any outer cover containing the protest notice as well as the notice itself. The following minimum information must be included in the written protest notice: 1) the name, address and phone number (including area code) of the protesting Bidder; 2) the protesting Bidder contact person's name and telephone number (including area code); and 3) a statement(s) describing the nature of the protest along with supporting documentation; 4) the City Bid number and title.

If the City intends to Award the Contract to other than the low Bidder, a notice of intent to Award shall be sent to all Bidders. Any Bidder other than the selected Bidder may protest the Award using the procedure outlined above within five working days of mailing the notice or two working days of actual receipt by electronic delivery or personal delivery.

16. Award of Contract: A Contract will not be awarded, if at all, until the City is satisfied that the successful Bidder is familiar with this type of Work and has the necessary capital and tools to satisfactorily complete the project. The competency and responsibility of Bidders as evidenced by the information accompanying the Bids, including without limitation the Statement of Bidder's Qualifications, which will be subject to verification, will be considered in making the Award. Posting of the Notice of Award by regular mail to the successful Bidder by the City shall constitute delivery to the successful Bidder for the purpose of this Section. See Specifications Sections 1-03 and 1-08 for more information.

17. Reciprocal Preference for Resident Contractors: In accordance with RCW 39.04.380, a Reciprocal Preference for Resident Contractors will be enforced. For a Public Works Bid received from a nonresident Contractor from a state that provides an in-state percentage Bidding preference, a Comparable Percentage Disadvantage (CPD) will be applied to the Bid of that nonresident Contractor. The CPD is the in-state Contractor percent advantage provided by the Contractor's home State.

    For the purpose of determining the successful low Bidder, the City will multiply the Nonresident Contractor Bid amount by the CPD. The "Bid amount" shall be the total of the based Bid and all accepted alternate Bid items. The CPD shall be added to the Nonresident Contractor Bid amount which equates to the Nonresident Disadvantage Total. The Nonresident Disadvantage Total shall be compared to the Washington Contractor Bid amounts. The Bidder with the lowest total shall be the Contractor.

18. Payment: In accordance with RCW 51.12.050, the City reserves the right to deduct from the payment any outstanding industrial insurance premiums owed by the Contractor or Subcontractors.

19. Applicable Law and Forum: Any suit arising from here shall be brought in King County Superior Court.

Provided to Builders Exchange of WA, Inc. For usage Conditions Agreement see www.bxwa.com - Always Verify Scale

III - BID DOCUMENTS

Provided to Builders Exchange of WA, Inc. For usage Conditions Agreement see www.bxwa.com - Always Verify Scale

Bid Submittal Checklist

- ☐ BID PROPOSAL SHEET (Pages)
- ☐ STATEMENT OF QUALIFICATIONS (2 Pages)
- ☐ NON COLLUSION DECLARATION
- ☐ BID BOND
- ☐ LOCAL AGENCY SUBCONTRACTORS LIST (not required on Bids estimated under $1M)

Failure to submit all of the above items will result in the Bid being non-responsive.

Provided to Builders Exchange of WA, Inc. For usage Conditions Agreement see www.bxwa.com - Always Verify Scale

BID PROPOSAL SHEET

NE 181st ST South Sidewalk Improvements Project

Bid No.: 16-C1517

Having carefully examined all documents enclosed herein, the undersigned proposes to perform all Work in strict compliance with all documents, for the amount set forth below.

Schedule A – Sidewalk Improvements

Work under this Schedule includes: constructing approximately 700 linear feet of sidewalk and appurtenances on NE 181st ST between 68th Ave NE and 73rd Ave NE in the City's downtown area.

	Item Of Work	Bid Quantity	Unit	Unit Prices	Amount
DIVISION 1 – General Requirements					
A1.	Unexpected Site Changes	1	EST	$15,000	$15,000
A2.	Construction Surveying	1	LS		
A3.	SPCC Plan	1	LS		
A4.	Mobilization	1	LS		
A5.	Project Temporary Traffic Control	1	LS		
A6.	Pedestrian Traffic Control	1	LS		
DIVISION 2 - Earthwork					
A7.	Clearing and Grubbing	0.10	AC		
A8.	Saw Cutting	2,120	LF		
A9.	Roadway Excavation Incl. Haul	50	CY		
A10.	Gravel Borrow Incl. Haul	200	TON		
A11.	Shoring or Extra Excavation Class B	1	LS		

COMPANY NAME_____

Provided to Builders Exchange of WA, Inc. For usage Conditions Agreement see www.bxwa.com - Always Verify Scale

BID PROPOSAL SHEET

NE 181st ST South Sidewalk Improvements Project

Bid No.: 16-C1517

Item No	Item Of Work	Bid Quantity	Unit	Unit Prices	Amount
DIVISION 4 - Bases					
A12.	Crushed Surfacing Top Course	150	TON		
DIVISION 5 – Surface Treatments and Pavements					
A13.	HMA for Pavement Repair Cl. ½" PG 64-22	160	TON		
A14.	HMA for Approach Cl. ½" PG 64-22	40	TON		
DIVISION 6 - Structures					
A15.	Precast Concrete Barrier Type 2	16	LF		
A16.	Modular Block Wall	970	SF		
DIVISION 7 – Drainage Structures, Storm Sewers, Sanitary Sewers, Water Mains, and Conduits					
A17.	Ductile Iron Storm sewer Pipe 12 In. Diam.	430	LF		
A18.	Catch Basin Type 1	3	EA		
A19.	Connection to Existing Storm Sewer	1	EA		
A20.	Bank Run Gravel for Trench Backfill	310	TON		
DIVISION 8 – Miscellaneous Construction					
A21.	Erosion/Water Pollution Control	1	EST	$5,000	$5,000
A22.	Inlet Protection	7	EA		
A23.	Silt Fence	580	LF		
A24.	PSIPE (Zelkova Serrata "Village Green"/Village Green Zelkova) 3" Cal.	11	EA		

COMPANY NAME_____

Provided to Builders Exchange of WA, Inc. For usage Conditions Agreement see www.bxwa.com - Always Verify Scale

BID PROPOSAL SHEET

NE 181st ST South Sidewalk Improvements Project

Bid No.: 16-C1517

Item No	Item Of Work	Bid Quantity	Unit	Unit Prices	Amount
A25.	Tree Grate	11	EA		
A26.	Property Restoration	1	EST	$5,000	$5,000
A27.	Root Barrier 18 In.	176	LF		
A28.	Topsoil Type A	11	CY		
A29.	Irrigation System Complete	1	LS		
A30.	Extruded Cement Conc. Curb	15	LF		
A31.	Cement Conc. Vertical Curb and Gutter	700	LF		
A32.	Pedestrian Railing	250	LF		
A33.	Cement Conc. Driveway Entrance Type 2 – 6 In.	70	SY		
A34.	Cement Conc. Driveway Entrance Type 2 – 8 In.	34	SY		
A35.	Cement Conc. Sidewalk	620	SY		
A36.	Cement Conc. Sidewalk Thickened Edge	262	SY		
A37.	N.D.C.B.U. Mailbox	1	EST	$1,500	$1,500
A38.	Illumination System Complete	1	LS		
A39.	Permanent Signing	1	LS		
A40.	Paint Line	1,370	LF		
A41.	Painted Traffic Arrow	2	EA		
A42.	Painted Traffic Letter	4	EA		
A43.	Plastic Stop Line	10	LF		

COMPANY NAME_____

Provided to Builders Exchange of WA, Inc. For usage Conditions Agreement see www.bxwa.com - Always Verify Scale

BID PROPOSAL SHEET

NE 181st ST South Sidewalk Improvements Project

Bid No.: 16-C1517

Item No	Item Of Work	Bid Quantity	Unit	Unit Prices	Amount
A44.	Temporary Pavement Markings	685	LF		
A45.	Comcast Conduit 2 In. Diam. - Install	360	LF		
A46.	Comcast Conduit 4 In. Diam. - Install	1,290	LF		
A47.	Frontier Conduit 2 In. Diam. - Install	190	LF		
A48.	Frontier Conduit 4 In. Diam. - Install	1,300	LF		
A49.	PSE Conduit 2 In. Diam. - Install	130	LF		
A50.	PSE Conduit 3 In. Diam. - Install	210	LF		
A51.	PSE Conduit 3 In. Diam. – Furnish and Install	110	LF		
A52.	PSE Conduit 3 In. Diam. Riser – Furnish and Install	2	EA		
A53.	PSE Conduit 4 In. Diam. - Install	960	LF		
A54.	PSE 233LA Fiberglass Handhole - Install	1	EA		
A55.	PSE 575LA Precast Vault - Install	1	EA		
A56.	PSE 484LA Precast Vault - Install	1	EA		
A57.	Comcast 3642LA Precast Vault - Install	4	EA		
A58.	Frontier 2x3 Precast Vault - Install	2	EA		
A59.	Frontier 3x5 Precast Vault - Install	2	EA		
A60.	Adjust Utility Vault	1	EA		

TOTAL SCHEDULE A BID _____
(Figures)

COMPANY NAME_____

Provided to Builders Exchange of WA, Inc. For usage Conditions Agreement see www.bxwa.com - Always Verify Scale

BID PROPOSAL SHEET
NE 181st ST South Sidewalk Improvements Project
Bid No.: 16-C1517

Schedule B – Water Improvements

Work under this Schedule includes: constructing approximately 70 linear feet water main, gate valve, and service connections.

Item No	Item Of Work	Bid Quantity	Unit	Unit Prices	Amount
B1.	Unexpected Site Changes	1	EST	$5,000	$5,000
B2.	Crushed Surfacing Base Course	50	TON		
B3.	HMA for Pavement Repair Cl. ½ In. PG 64-22	8	TON		
B4.	8" Cl. 52 DI Water Pipe	70	LF		
B5.	Connect to Existing Water System	3	EA		
B6.	Additional Water Main Fittings (If Required)	700	LB		
B7.	8" Gate Valve Assembly	1	EA		
B8.	Fire Hydrant Assembly	1	EA		
B9.	¾" or 1" Water Service and Reconnection	4	EA		
B10.	1-1/2" Water Service and Reconnection	1	EA		

SUB-TOTAL SCHEDULE B BID _____
(Figures)

SALES TAX (9.5%) _____
(Figures)

TOTAL FOR SCHEDULE B BID _____
(Figures)

COMPANY NAME_____

Provided to Builders Exchange of WA, Inc. For usage Conditions Agreement see www.bxwa.com - Always Verify Scale

BID PROPOSAL SHEET

NE 181st ST South Sidewalk Improvements Project

Bid No.: 16-C1517

BID SUMMARY

Total Schedule A:_____

(Figures)

Total Schedule B:_____

(Figures)

Total Bid Schedules A+B:_____

(Figures)

_____

(Words)

COMPANY NAME_____

Provided to Builders Exchange of WA, Inc. For usage Conditions Agreement see www.bxwa.com - Always Verify Scale

BID PROPOSAL SHEET

NE 181st ST South Sidewalk Improvements Project

Bid No.: 16-C1517

BID SIGNATURE PAGE

- Use ink and print legibly
- Make sure to initial and date any changes, erasures, or cross-outs in your Bid
- When a discrepancy occurs, the unit Bid amount shall take precedence
- All information regarding this Bid may be sent to the address, phone number and email provided below
- The Bid includes all State of Washington or local sales tax, pursuant to the requirements of Rule 171 of the Department of Revenue. Where rule 170 applies, sales tax has been included on the line provided as part of the Bid
- Bidder acknowledges receipt of **Addenda** ___ through ___.
    - No Addenda issued ☐
- If awarded the Contract, the undersigned agrees to complete all the Work as specified for the above listed project within 60 WORKING DAYS after the indicated starting date appearing in an official "Notice to Proceed" issued by the City.

Company name: _____

Address: _____

Mailing Address: _____

City/State/Zip: _____

Phone: _____

E-Mail: _____

Signed by (Printed): _____

Title of Signatory: _____

Bid Signature: _____ Date: _____

COMPANY NAME _____

Provided to Builders Exchange of WA, Inc. For usage Conditions Agreement see www.bxwa.com - Always Verify Scale

BID PROPOSAL SHEET

NE 181st ST South Sidewalk Improvements Project

Bid No.: 16-C1517

STATEMENT OF BIDDER'S QUALIFICATIONS (2 pages)

The Statement of Bidder's Qualifications is to be completed by the Bidder and provided as part of the Bid submission. This statement of qualifications is also to be completed for all Subcontractors who will subcontract to perform at least twenty-five percent (25%) of the total Bid amount and be submitted by the two low Bidders within 24 hours after the Bid results are published.

Name of Firm: _____

Number of Years Doing Business Under Present Name: _____

State of Washington DOL Contractor's Registration Number: _____

State of Washington UBI Number: _____

State of Washington Department of Employment Security Number: _____

Washington State Excise Tax Registration Number: _____

Federal Tax ID Number: _____

The City may conduct reference checks for the Bidder whose Bid is under consideration for Award for verification of Bidder responsibility under mandatory and supplemental Bidder responsibility of the Contract Documents. The City may determine that the Bidder is not a responsible Bidder and may Award to the next lowest Bidder who meets the Bidder qualification requirements. In conducting reference checks, the City may include itself or other government agencies and businesses as a reference even if the Bidder did not identify these sources as a reference.

On a separate sheet, list all major projects of a similar nature which have been completed by or supervised by the Contractor within the last ten years (up to 10 most recent projects). List should include, as a minimum, the following information for each project listed:

- Project name and owner
- Project completion date, final Contract amount and working days
- Owner contact name and phone number
- Project description
- Role as Prime or Subcontractor
- Federally funded project - yes or no

References must be submitted to the City by the apparent two low Bidders within 24 hours of announcement of the Bid results.

1. **Delinquent Sales Taxes**. Are you delinquent on your taxes with the Department of Revenue?
   ☐ Yes ☐ No
   If yes, a written payment plan will be required according to Special Provisions Section 1.02.14.

COMPANY NAME _____

Provided to Builders Exchange of WA, Inc. For usage Conditions Agreement see www.bxwa.com - Always Verify Scale

BID PROPOSAL SHEET

NE 181st ST South Sidewalk Improvements Project

Bid No.: 16-C1517

2. **Federal Debarment**. Are you listed on as having an "active exclusion" on the U.S. Government's System for Award Management data base (https://www.sam.gov/)?
   ☐ Yes ☐ No

3. **Subcontractor Responsibility**. Do you have responsibility criteria for each Subcontractor as required per RCW 39.06.020?
   ☐ Yes ☐ No
   If yes, include a copy of your standard subcontract form according to Special Provisions Section 1.02.14.

4. **Prevailing Wages**. Do you have determinations by the WA Labor and Industries that prevailing wages were not paid within the last five years?
   ☐ Yes ☐ No
   If yes, list the dates of these determinations:_____.

5. **Claims Against Retainage and Bonds**. Do you have two or more claims against retainage and/or bonds on any Public Works Contract within the last three years from the date of Bid submittal?
   ☐ Yes ☐ No
   If yes, a report of such claims will be required according to Special Provisions Section 1.02.14.

6. **Public Bidding Crime**. Have you been convicted of a crime involving Bidding on a Public Works Contract in the five years prior to the Bid submittal date?
   ☐ Yes ☐ No

7. **Termination for Cause/Termination for Default**. Have you had any public Contract terminated for default or cause by a government agency within the five years from the date of Bid submittal?
   ☐ Yes ☐ No
   If yes, a report describing the circumstances of such termination or default will be required according to Special Provisions Section 1.02.14.

8. **Lawsuits**. Have judgments been entered against you within the last five years from the date of Bid submittal relating to Contract enforcement or breach?
   ☐ Yes ☐ No
   If yes, a report containing an explanation of the circumstances surrounding each such lawsuit will be required according to Special Provisions Section 1.02.14.

By the signature below, the Bidder confirms that all information provided is true and correct and agrees that the City shall retain the right to obtain any and all credit reports.

Signature :_____

Title: _____

Date:_____

Print Name: _____

COMPANY NAME_____

Provided to Builders Exchange of WA, Inc. For usage Conditions Agreement see www.bxwa.com - Always Verify Scale

BID PROPOSAL SHEET

NE 181st ST South Sidewalk Improvements Project

Bid No.: 16-C1517

Failure to return this Declaration as part of the Bid Proposal package will make the Bid nonresponsive and ineligible for Award.

NON-COLLUSION DECLARATION

I, by signing the proposal, hereby declare, under penalty of perjury under the laws of the United States that the following statements are true and correct:

1. That the undersigned person(s), firm, association or corporation has (have) not, either directly or indirectly, entered into any agreement, participated in any collusion, or otherwise taken any action in restraint of free competitive Bidding in connection with the project for which this Proposal is submitted.
2. **That by signing the signature page of this Proposal, I am deemed to have signed and to have agreed to the provisions of this declaration.**

NOTICE TO ALL BIDDERS

To report rigging activities call:

1-800-424-9071

The U.S. Department of Transportation (USDOT) operates the above toll-free "hotline" Monday through Friday, 8:00 a.m. to 5:00 p.m., Eastern Time. Anyone with knowledge of possible Bid rigging, Bidder collusion, or other fraudulent activities should use the "hotline" to report such activities.

The "hotline" is part of USDOT's continuing effort to identify and investigate Highway construction Contract fraud and abuse and is operated under the direction of the USDOT Inspector General. All information will be treated confidentially and caller anonymity will be respected.

DOT Form 272-036l EF
07/20116

COMPANY NAME_____

Provided to Builders Exchange of WA, Inc. For usage Conditions Agreement see www.bxwa.com - Always Verify Scale

BID BOND

KNOW ALL BY THESE PRESENTS:

That we, _____(Bidder), as Principal, and _____ (Bonding Company), as Surety, are held and firmly bound unto the City and the Kenmore City Council (Owner), as Obligee, in the penal sum of _____ Dollars, lawful money of the United States, for the payment of which unto Obligee, the Principal and Surety bind themselves, their heirs, executors, administrators, successors and assigns, jointly and severally, by these presents.

WHEREAS, Principal is submitting a Bid for the NE 181st ST South Sidewalk Improvements Project, Bid No. 16-C1517.

NOW, THEREFORE, the condition of this obligation is such that if Principal is awarded a Contract for the Work, and if Principal within the time specified in the Contract Documents enters into, executes and delivers to Obligee a signed agreement and the Contract bond per the Specifications, with Surety or Sureties approved by Obligee, and appropriate insurance certificates, with required endorsements and insurance coverage, as required herein in the forms provided herewith, then this obligation shall be void. If, however, Principal fails or refuses to furnish any of the above listed items in the time stated in the Contract Documents for the referenced Bid, then Principal and Surety shall pay and forfeit to Obligee the penal sum hereof.

AND IT IS HEREBY DECLARED AND AGREED that Surety shall be liable under this obligation as Principal and that nothing of any kind or nature whatsoever that will not discharge Principal shall operate as a discharge or release of liability of Surety.

AND IT IS HEREBY FURTHER DECLARED AND AGREED that this obligation shall be binding upon and inure to the benefit of Principal, Surety and Obligee and their respective heirs, administrators, executors, successors and assigns.

IN TESTIMONY WHEREOF, the Principal and Surety have caused these present to be SIGNED, SEALED AND DATED THIS _____ DAY OF _____, 20___.

_____	_____
Principal	Surety
By:_____	By: _____
Title: _____	Attorney-in Fact, Surety
	_____
	Surety's Mailing Address
	_____
	Surety's Telephone and Fax Numbers

A notarized power of attorney for the Surety's officer empowered to sign the bond must be attached to the bond.

Provided to Builders Exchange of WA, Inc. For usage Conditions Agreement see www.bxwa.com - Always Verify Scale

Subcontractor List

Prepared in compliance with RCW 39.30.060 as amended

To Be Submitted with the Bid Proposal or within One (1) Hour after the Bid Closing

Project Name: NE 181st ST South Sidewalk Improvements

Bid No.: 16-C1517

Failure to list Subcontractors who are proposed to perform the Work of heating, ventilation, and air conditioning, plumbing, as described in Chapter 18.106 RCW, and electrical as described in Chapter 19.28 RCW will result in your Bid being non-responsive and therefore void.

Subcontractor(s) that are proposed to perform the Work of heating, ventilation and air conditioning, plumbing, as described in Chapter 18-106 RCW, and electrical as described in Chapter 19.28 RCW must be listed below. The Work to be performed is to be listed below the Subcontractor(s) name.

If no Subcontractor is listed below, the Bidder acknowledges that it does not intend to use any Subcontractor to perform those items of Work.

Subcontractor Name _____

Work to be Performed _____

_____

_____

_____

Subcontractor Name _____

Work to be Performed _____

_____

_____

_____

Subcontractor Name _____

Work to be Performed _____

_____

_____

_____

Subcontractor Name _____

Work to be Performed _____

_____

_____

_____

Note: Bidders are notified that it is the opinion of the enforcement agency that PVC or metal conduit, junction boxes, utility vaults, etc, are considered electrical equipment and therefore considered part of electrical Work, even if the installation is for future use and no wiring or electrical current is connected during the project.

Provided to Builders Exchange of WA, Inc. For usage Conditions Agreement see www.bxwa.com - Always Verify Scale

IV - AWARD DOCUMENTS

Provided to Builders Exchange of WA, Inc. For usage Conditions Agreement see www.bxwa.com - Always Verify Scale

City Of Kenmore Contract Number:_____

CONTRACT AGREEMENT

NE 181st ST South Sidewalk Improvements Project
Bid No. 16-C1517

THIS AGREEMENT by and between the City of Kenmore, hereinafter the City, and , hereinafter the Contractor, is effective as of the date last executed as duplicate originals.

WITNESSETH:

That in consideration of the performance and payment under the terms and conditions contained in the Contract Documents for Bid No. 16-C1517, the parties hereto covenant and agree as follows:

I. The Contractor hereby agrees to complete the "**NE 181st ST South Sidewalk Improvements**" (hereafter "Project") in accordance with the Contract Documents, including Addenda ___ through ___ which are by this reference incorporated herein and made a part hereof.

The time limit for completion of the Work is **60** working days from the City's Notice to Proceed. The Contractor agrees to pay the City the sum set forth in the Contract Documents for each and every day said Work remains uncompleted after expiration of this time as liquidated damages.

The Contractor is responsible for determining the means and methods to be used to complete the project. The Contractor shall provide and bear the expense of all equipment, Work and labor of any sort whatsoever that may be required for the transfer of materials and for constructing and completing the Work.

II. The City promises and agrees to pay the Contractor for the Project according to the attached Contractor's Bid Proposal Sheet at the time and in the manner provided for in the Contract Documents.

III. No liability shall attach to the City of Kenmore by reason of entering into this Contract except as expressly provided in the Contract Documents.

IV. The Contractor shall defend, indemnify, and hold the City and its officers, agents, employees and volunteers harmless from any and all claims, injuries, damages, losses or suits of any nature including attorneys' fees, costs and expenses arising out of or in connection with the performance of the Contract. This Agreement is subject to RCW 4.24.115. In the event of liability for damages arising out of bodily injury to persons or damages to property caused by or resulting from the concurrent negligence of the Contractor and the City, its officers, officials, employees and volunteers, the Contractors liability hereunder shall be only to the extent of the Contractor negligence. It is further specifically and expressly understood that the indemnification provided herein constitutes the Contractor's waiver of immunity under

Provided to Builders Exchange of WA, Inc. For usage Conditions Agreement see www.bxwa.com - Always Verify Scale

City Of Kenmore Contract Number:_____

Industrial Insurance. Title 51 RCW, solely for the purposes of this indemnification. This waiver has been mutually negotiated by the parties. The provisions of this Section shall survive the expiration or termination of the Contract.

This Agreement is executed by:

City of Kenmore	Contractor
Signature: _____	Signature: _____
Print Name: _____	Print Name:_____
Title: _____	Title:_____
Date:_____	Date:_____

Payment Address: _____

_____

_____

_____

Provided to Builders Exchange of WA, Inc. For usage Conditions Agreement see www.bxwa.com - Always Verify Scale

City Of Kenmore Contract Number:_____

PAYMENT AND PERFORMANCE BOND

To City of Kenmore, WA

Bond No._____

The City of Kenmore, Washington (City) has awarded to _____

_____

(Principal), a Contract for the construction of the project designated as NE 181st ST South Sidewalk Improvements, Bid No. 16-C1517 in Kenmore, Washington (Contract), and said Principal is required under the terms of that Contract to furnish a Contract Bond for payment in accord with Title 39.08 Revised Code of Washington (RCW) and (where applicable) 60.28 RCW and for performance of all obligations under the Contract.

The Principal, and _____ (Surety), a corporation organized under the laws of the State of _____ and licensed to do business in the State of Washington as Surety and named in the current list of "Surety Companies Acceptable in Federal Bonds" as published in the Federal Register by the Audit Staff Bureau of Accounts, U.S. Treasury Dept., are jointly and severally held and firmly bound to the City, in the sum of $ _____ US Dollars, total Contract Amount, subject to the provisions herein.

This statutory payment and performance bond shall become null and void:

> If and when the Principal, its heirs, executors, administrators, successors, or assigns shall pay all persons in accordance with RCW 39.08, 39.12, and 60.28 including all workers, laborers, mechanics, Subcontractors, and materialmen, and all person who shall supply such Contractor or Subcontractor with provisions and supplies for the carrying on of such Work, and all taxes incurred on said Contract under Titles 50 and 51 RCW and all taxes imposed on the Principal under Title 82 RCW; and if such payment obligations have not been fulfilled, this bond shall remain in full force and effect.
>
> AND
>
> If and when the Principal, its heirs, executors, administrators, successors, or assigns shall well and faithfully perform all of the Principal's obligations under the Contract and fulfill all terms and conditions of all duly authorized modifications, additions, and changes to said Contract that may hereafter be made, at the time and in the manner therein specified; and if such performance obligations have not been fulfilled, this bond shall remain in force and effect

The Surety for value received agrees that no change, extension of time, alteration or addition to the terms of the Contract, the Specifications accompanying the Contract, or to the Work to be performed under the Contract shall in any way affect its obligation on this bond, and waives

Provided to Builders Exchange of WA, Inc. For usage Conditions Agreement see www.bxwa.com - Always Verify Scale

notice of any changes, extension of time, alteration or addition to the terms of the Contract or the Work performed. The Surety agrees that modifications and changes to the terms and conditions of the Contract that increase the total amount to be paid the Principal shall automatically increase the obligation of the Surety on this bond and notice to Surety is not required for such increased obligation.

This bond may be executed in two (2) original counterparts, and shall be signed by the parties' duly authorized officers. This bond will only be accepted if it is accompanied by a fully executed and original power of attorney for the office executing on behalf of the Surety.

PRINCIPAL		SURETY	
Principal Signature	Date	Surety Signature	Date
Printed Name	Date	Printed Name	Date
Title		Title	
		Surety Name	
		Address	
		City/State/Zip	
		Telephone Number	

A notarized power of attorney for the Surety's officer empowered to sign the bond must be attached.

Provided to Builders Exchange of WA, Inc. For usage Conditions Agreement see www.bxwa.com - Always Verify Scale

V – KING COUNTY SUPPLEMENTARY CDBG GENERAL CONDITIONS

Provided to Builders Exchange of WA, Inc. For usage Conditions Agreement see www.bxwa.com - Always Verify Scale

FEDERAL CONTRACT REQUIREMENTS

U.S. DEPARTMENT OF HOUSING
And
URBAN DEVELOPMENT

King County
Housing and Community Development
Supplemental Construction Contract Conditions

Provided to Builders Exchange of WA, Inc. For usage Conditions Agreement see www.bxwa.com - Always Verify Scale

SUPERSEDING

If there are conflicts between this exhibit and other sections of this bid document/agreement and amendments these Supplementary Conditions shall supersede such sections unless otherwise agreed upon in writing by both parties.

Provided to Builders Exchange of WA, Inc. For usage Conditions Agreement see www.bxwa.com - Always Verify Scale

1. PRECONSTRUCTION CONFERENCE

Either before or soon after the actual award of the Contract (but in any event prior to the start to Work at site), the Contractor or his representative, and his subcontractors, shall attend a Preconstruction Conference with representatives of the Owner, the Engineer, or Architect, and the King County Community Development Block Grant Program. The Conference will be held to establish procedures for handling shop drawings and other submittals and for processing applications for payment, and to acquaint the participants with the general plan of contract administration and requirements under which the construction operation is to proceed. The date, time, and place of the Conference will be furnished to the Contractor by the Owner or the Architect/Engineer. The Contractor will notify his subcontractors of the Conference and require their attendance.

2. SUBMISSION OF COMPLIANCE DOCUMENTS

A. In order to document his compliance with the King County Community Development Block Grant Program requirements and Federal regulations, the successful Bidder will be required to submit and to require his subcontractors to submit various forms and reports required by the Contract Documents, including but not limited to:

1. HCD Labor Form 3 Contract/Sub-Contract Activity Form;
2. HCD Labor Form 4 Prime Contractor Cert. of Business Status;
3. HCD Labor Form 5 Sub-Contract Agreement for any sub-contracts;
4. HCD Labor Form 6 Sub-Tier Sub-Contract Agreement for any sub-tier sub-contracts;
5. HCD Labor Form 6A List of Subcontractors
6. HCD Labor Form 7 Authorization to Sign Payroll
7. HCD Labor Form 8 Fringe Benefit Form attached to submitted weekly payrolls
8. HCD Labor Form 9 Dept. of Labor Weekly Payroll Form WH347
9. HCD Labor Form 9A Employee Roster Form
10. HCD Labor Form 10 No Work Performed in lieu of Dept of Labor Payroll Form if no work is performed
11. HCD Labor Form 13 Labor Compliance Closeout List
12. HCD Section 3 Form 1 HUD Section 3 re New Hires on contracts over $100,000
13. HCD – Labor 4.16 Info Form #4 – Unanticipated Discovery Plan (UDP)

B. Contractors and subcontractors will be required to allow interviews with employees on the job during working hours.

3. ACCESS TO RECORDS

Provided to Builders Exchange of WA, Inc. For usage Conditions Agreement see www.bxwa.com - Always Verify Scale

The Secretary of HUD, the King County Community Development Block Grant Program, the Comptroller General of the United States, the Owner and any of their duly authorized representatives shall have access to all books, accounts, records, reports, files, and other papers or property of the Contractor and his Subcontractors pertaining to work performed under this Contractor and his Subcontractors pertaining to work performed under this Contract for the purpose of making surveys, audits, examinations, excerpts, and transcripts. The Contractor shall retain records pertinent to this Contract for a period of six years from the date of termination or completion of this contract.

4. ELIGIBLE SUBCONTRACTORS

The Contractor shall not propose or contract with any person or entity included in the United States Department of Housing and Urban Development Consolidated List of Debarred, Suspended, and Ineligible Contractors and Grantees, or legally prohibited from conducting business in Washington State.

5. INTEREST OF CERTAIN FEDERAL OFFICIALS

No member of or delegate to the Congress of the United States and no Resident Commissioners shall be admitted to any share or part of this Agreement or to any benefit that may arise hereunder.

6. INTEREST OF OWNER'S EMPLOYEES OR OTHER PUBLIC OFFICIALS

No member officer, or employee of King County, or its designees or agents, no member of the governing body of the city in which the Project is located, and no other public official of the city in which the Project is located who exercises any functions or responsibilities with respect to the King County Community Development Block Grant Program during his or her tenure or for one year thereafter, shall have any interest, direct or indirect, in this Agreement or any subcontract, or the proceeds thereof. The Contractor shall incorporate, or cause to be incorporated, in all subcontracts a provision prohibiting such interest.

7. CERTIFICATION REGARDING LOBBYING

By signing this contract the undersigned certifies, to the best of his or her knowledge and belief, that:

A. No Federal appropriated funds have been paid or will be paid, by or on behalf of the undersigned, to any person for influencing or attempting to influence an officer or employee of any agency, a Member of Congress, an officer or employee of Congress, in connection with the awarding of any Federal contract, the making of any Federal grant, the making of any Federal loan, the entering into of any cooperative agreement, and the extension, continuation, renewal, amendment, or modification of any Federal contract, grant, loan, or cooperative agreement.

Provided to Builders Exchange of WA, Inc. For usage Conditions Agreement see www.bxwa.com - Always Verify Scale

B. If any funds other than Federal appropriated funds have been paid or will be paid to any person for influencing or attempting to influence an officer or employee of any agency, a Member of Congress, an officer or employee of Congress, or an employee of a Member of Congress in connection with this Federal contract grant, loan, or cooperative agreement, the undersigned shall complete and submit Standard Form-LLL, "Disclosure Form to Report Lobbying," in accordance with its instructions.

C. The undersigned shall require that the language of this certification be included in the award documents for all subawards at all tiers (including subcontracts, subgrants, and contracts under grants. loans and cooperative agreements) and that all subrecipients shall certify and disclose accordingly.

This certification is a material representation of fact upon which reliance was placed when this transaction was made or entered into. Submission of this certification is a prerequisite for making or entering into this transaction imposed by section 1352, title 31, U.S. Code. Any person who fails to file the required certification shall be subject to a civil penalty of not less than $10,000 and not more than $100,000 for each such failure.

8. **NOTICE OF REQUIREMENT FOR AFFIRMATIVE ACTION TO ENSURE EQUAL EMPLOYMENT OPPORTUNITY (Executive Order 11246)**

A. The offeror's or Bidder's attention is called to the "Equal Opportunity Clause" and the "Standard Federal Equal Employment Opportunity Construction Contract Specifications" set forth herein.

B. The Contractor shall provide written notification to the Director of the Office of Federal Contract Compliance Programs within 10 working days of award of any construction subcontract in excess of $10,000 at any tier for construction work under the contract resulting from this solicitation. The notification shall list the name, address and telephone number of the subcontractor; employer identification number; estimated dollar amount of the subcontract; estimated starting and completion dates of the subcontract; and the geographical area in which the contract is to be performed.

C. As used in this Notice, and in the contract resulting from this solicitation, the covered area is King County, Washington.

9. **U.S. DEPARTMENT OF HOUSING AND URBAN DEVELOPMENT STANDARD FEDERAL EQUAL EMPLOYMENT OPPORTUNITY CONSTRUCTION CONTRACT SPECIFICATIONS (Executive Order 11246)**

A. As used in these specifications:

1. "Covered area means the geographical area described in the solicitation from which this contract resulted;

Provided to Builders Exchange of WA, Inc. For usage Conditions Agreement see www.bxwa.com - Always Verify Scale

2. "Director means Director, Office of Federal Contract Compliance Programs, United States Department of Labor, or any person to whom tile Director delegates authority;

3. "Minority" includes:

   a. Black (all persons having origins in any of the Black African racial groups not of Hispanic origin);

   b. Hispanic (all persons of Mexican, Puerto Rican, Cuban, Central or South American or other Spanish Culture or origin, regardless of race);

   c. Asian and Pacific Islander (all persons having origins in any of the original peoples of the Far East, Southeast Asia, the Indian Subcontinent, or the Pacific Islands); and

   d. American Indian or Alaskan Native (all persons having origins in any of the original peoples of North American and maintaining identifiable tribal affiliations through membership and participation or community identification).

B. Whenever the Contractor, or any Subcontractor at any tier, Subcontracts a portion of the work involving any construction trade, it shall physically include in each subcontract the excess of $10,000 the provisions of these specifications and the Notice which contains the applicable goals for minority and female participation and which is set forth in the solicitations from which this contract resulted.

C. If the Contractor is participating (pursuant to 41 CFR 60-4.5) in a Hometown Plan approved by the U.S. Department of Labor in the covered area either individually or through an association, its affirmative action obligations on all work in the Plan area (including goals and timetables) shall be in accordance with the Plan for those trades which have unions participating in the Plan. Contractors must be able to demonstrate their participation in and compliance with the provisions of any such Hometown Plan. Each Contractor or Subcontractor participating in an approved Plan is individually required to comply with its obligations under the EEO clause, and to make a good faith effort to achieve each goal under the plan in each trade in which it has employees. The overall good faith performance by other Contractors or Subcontractors toward a goal in an approved Plan does not excuse any covered Contractor's or Subcontractor's failure to take good faith efforts to achieve the Plan goals and timetables.

D. The Contractor shall implement the specific affirmative action standards provided in paragraphs 7a through p of these specifications. The goals set forth in the solicitation from which this contract resulted are expressed as percentages of the total hours of employment and training of minority and female utilization the Contractor should reasonably be able to achieve in each construction trade in which it has employees in the covered area. The Contractor is expected to make

Provided to Builders Exchange of WA, Inc. For usage Conditions Agreement see www.bxwa.com - Always Verify Scale

substantially uniform progress toward its goals in each craft during the period specified.

E. Neither the provisions of any collective bargaining agreement, nor the failure by a union with whom the Contractor has a collective bargaining agreement, to refer either minorities or women shall excuse the Contractor's obligations under these specifications, Executive Order 11246, or the regulations promulgated pursuant thereto.

F. In order for the nonworking training hours of apprentices and trainees to be counted in meeting the goals, such apprentices and trainees must be employed by the Contractor during the training period, and the Contractor must have made a commitment to employ the apprentices and trainees at the completion of their training, subject to the availability of employment opportunities. Trainees must be trained pursuant to training programs approved by the U.S. Department of Labor.

G. The Contractor shall take specific affirmative actions to ensure equal employment opportunity. The evaluation of the Contractor's compliance with these specifications shall be based upon its effort to achieve maximum results from its actions. The Contractor shall document these efforts fully, and shall implement affirmative action steps at least as extensive as the following:

1. Ensure and maintain a working environment free of harassment, intimidation, and coercion, at all sites, and in all facilities at which the Contractor's employees are assigned to work. The Contractor, where possible, will assign two or more women to each construction project. The Contractor shall specifically ensure that all foremen, superintendents, and other on-site supervisory personnel are aware of and carry out the Contractor's obligation to maintain such a working environment, with specific attention to minority or female individuals working at such sites or in such facilities.

2. Establish and maintain a current list of minority and female recruitment sources, provide written notification to minority and female recruitment sources and to community organizations when the Contractor or its unions have employment opportunities available, and maintain a record of the organizations' responses.

3. Maintain a current file of the names, addresses and telephone numbers of each minority and female off-the-street applicant and minority or female referral from a union, recruitment source or community organization and of what action was taken with respect to each such individual, If such individual was sent to the union hiring hall for referral and was not referred back to the Contractor by the union or, if referred, not employed by the Contractor, this shall be documented in the file with the reason therefore, along with whatever additional actions the Contractor may have taken.

Provided to Builders Exchange of WA, Inc. For usage Conditions Agreement see www.bxwa.com - Always Verify Scale

4. Provide immediate written notification to the Director when the union or union with which the Contractor has a collective bargaining agreement has not referred to the Contractor a minority person or woman sent by the Contractor, or when the Contractor has other information that the union referral process has impeded the Contractor's efforts to meet its obligations.

5. Develop on-the-job training opportunities and/or participate in training programs for the area which expressly include minorities and women, including upgrading programs and apprenticeship and trainee programs relevant to the Contractor's employment needs, especially those programs funded or approved by the Department of Labor. The Contractor shall provide notice of these programs to the sources compiled under 7b above.

6. Disseminate the Contractor's EEO policy by providing notice of the policy to unions and training programs and requesting their cooperation in assisting the Contractor in meeting its EEO obligations; by including it in any policy manual and collective bargaining agreement; by publicizing it in the company newspaper, annual report, etc; by specific review of the policy with all management personnel and with all minority and female employees at least once a year; and by posting the company EEO policy on bulletin boards accessible to all employees at each location where construction work is performed.

7. Review, at least annually, the company's EEO policy and affirmative action obligations under these specifications with all employees having any responsibility for hiring, assignment, layoff, termination or other employment decisions including specific review of these items with onsite supervisory personnel such as Superintendents, General Foremen, etc., prior to the initiation of construction work at any job site. A written record shall be made and maintained identifying the time and place of these meetings, persons attending, subject matter discussed, and disposition of the subject matter.

8. Disseminate the Contractor's EEO policy externally by including it in any advertising in the news media, specifically including minority and female news media, and providing written notification to and discussing the Contractor's EEO policy with other Contractors and Subcontractors with whom the Contractor does or anticipates doing business.

9. Direct its recruitment efforts, both oral and written, to minority, female and community organizations, to schools with minority and female students and to minority and female recruitment and training organizations serving the Contractor's recruitment area and employment needs. Not later than one month prior to the date for the acceptance of applications for apprenticeship or other training by any recruitment source, the Contractor shall send written notification to organization such as the above, describing the openings, screening procedures, and tests to be used in the selection process.

Provided to Builders Exchange of WA, Inc. For usage Conditions Agreement see www.bxwa.com - Always Verify Scale

10. Encourage present minority and female employees to recruit other minority persons and women and, where reasonable, provide after school, summer and vacation employment to minority and female youth both on the site and in other areas of a Contractor's work force.

11. Validate all tests and other selection requirements where there is an obligation to do so under 41 CFR Part 60-3.

12. Conduct, at least annually, an inventory and evaluation at least of all minority and female personnel for promotional opportunities and encourage these employees to seek or to prepare for, through appropriate training, etc., such opportunities.

13. Ensure that seniority practices, job classifications, work assignments and other personnel practices, do not have a discriminatory effect by continually monitoring all personnel and employment related activities to ensure that the EEO policy and the Contractor's obligations under these specifications are being carried out.

14. Ensure that all facilities and company activities are nonsegregated except that separate or single-user toilet and necessary changing shall be provided to assure privacy between the sexes. Document and maintain a record of all solicitations of offers for subcontracts from minority and female construction contractors and suppliers, including circulation of solicitations to minority and female contractor associations and other business associations.

15. Document and maintain a record of all solicitations of offers for subcontractors from minority construction contractors and suppliers, including circulation of solicitations to minority and female contractor associations and other business associations.

16. Conduct a review, at least annually, of all supervisors' adherence to and performance under the Contractor's EEO policies and affirmative action obligations.

H. Contractors are encouraged to participate in voluntary associations which assist in fulfilling one or more of their affirmative action obligations (7a through p). The efforts of a contractor association, joint contractor-union, contractor-community, or other similar group of which the contractor is a member and participant, may be asserted as fulfilling any one or more of its obligations under 7a through p of these Specifications provided that the contractor actively participates in the group, makes every effort to assure that the group has a positive impact on the employment of minorities and women in the industry, ensures that the concrete benefits of the program are reflected to the Contractor's minority and female workforce participation, makes a good faith effort to meet its individual goals and timetables, and can provide access to documentation which demonstrates the

Provided to Builders Exchange of WA, Inc. For usage Conditions Agreement see www.bxwa.com - Always Verify Scale

effectiveness of actions taken on behalf of the Contractor. The obligation to comply, however, is the Contractor's and failure of such a group to fulfill an obligation shall not be a defense for the Contractor's noncompliance.

I. A single goal for minorities and a separate single goal for women have been established. The Contractor, however, is required to provide equal employment opportunity and to take affirmative action for all minority groups, both male and female, and all women, both minority and non-minority. Consequently, the Contractor may be in violation of the Executive Order if a particular group is employed in a substantially disparate manner (for example, even though the Contractor has achieved its goals for women generally, the Contractor may be in violation of the Executive Order if a specific minority group of women is under utilized).

J. The Contractor shall not use the goals and timetables or affirmative action standards to discriminate against any person because of race, color, religion, sex, or national origin.

K. The Contractor shall not enter into any Subcontract with any person or firm debarred from Government contracts pursuant to Executive Order 11246.

L. The Contractor shall carry out such sanctions and penalties for violation of these specifications and of the Equal Opportunity Clause, including suspension, termination and cancellation of existing subcontracts as may be imposed or ordered pursuant to Executive Order 11246, as amended, and implementing regulations, by the Office of Federal Contract Compliance Programs. Any Contractor who fails to carry out such sanctions and penalties shall be in violation of these specifications and Executive Order 11246, as amended.

M. The Contractor, in fulfilling its obligations under these specifications, shall implement specific affirmative action steps, at least as extensive as those standards prescribed in paragraph 7 of these specifications, so as to achieve maximum results from its efforts to ensure equal employment opportunity. If the Contractor fails to comply with the requirements of the Executive Order, the implementing regulations, or these specifications, the Director shall proceed in accordance with 41 CFR 60-4.8.

N. The Contractor shall designate a responsible official to monitor all employment related activity to ensure that the company EEO policy is being carried out, to submit reports relating to the provisions hereof as may be required by the Government and to keep records. Records shall at least include for each employee the name, address, telephone numbers, construction trade, union affiliation if any, employee identification number when assigned, social security number, race, sex, status (e.g., mechanic, apprentice trainee, helper or laborer), dates of changes in status, hours worked per week in the indicated trade, rate of pay, and locations at which the work was performed. Records shall be maintained in an easily understandable and retrievable form; however, to the degree that existing records

Provided to Builders Exchange of WA, Inc. For usage Conditions Agreement see www.bxwa.com - Always Verify Scale

satisfy this requirement, contractors shall not be required to maintain separate records.

O. Nothing herein provided shall be construed as a limitation upon the application of other laws which establish different standards of compliance or upon the application of requirements for the hiring of local or other area residents (e.g., those under the Public Works Employment Act of 1977 and the Community Development Block Grant Program).

10. COMPLIANCE WITH EQUAL OPPORTUNITY PROVISIONS FOR CONSTRUCTION PROJECTS

During the performance of this contract, the contractor agrees as follows:

A. The contractor will not discriminate against any employee or applicant for employment because of race, color, religion, sex or national origin. The contractor will take affirmative action to ensure that applicants are employed, and that employees are treated during employment without regard to their race, color, religion, sex, or national origin. Such action shall include, but not be limited to the following: Employment, upgrading, demotion, or transfer; recruitment or recruitment advertising; layoff or termination; rates of pay or other forms of compensation; and selection for training, including apprenticeship. The contractor agrees to post in conspicuous places, available to employees and applicants for employment, notices to be provided by the contracting officer setting forth the provisions of this nondiscrimination clause.

B. The contractor will, in all solicitations or advertisements for employees placed by or on behalf of the contractor, state that all qualified applicants will receive consideration for employment without regard to race, color, religion, sex, or national origin.

C. The contractor will send to each labor union or representative of workers with which he has a collective bargaining agreement or other contract or understanding, a notice to be provided by the agency contracting officer, advising the labor union or workers representative of the contractor's commitments under section 202 of Executive Order No. 11246 of September 24, 1965, and shall post copies of the notice in conspicuous places available to employees and applicants for employment.

D. The contractor will comply with all provisions of Executive Order No. 11246 of September 24, 1965, and of the rules, regulations, and relevant orders of the Secretary of Labor.

E. The contractor will furnish all information and reports required by Executive Order No. 11246 of September 24, 1965, and by rules, regulations, and orders of the Secretary of Labor, or pursuant thereto, and will permit access to his books, records, and accounts by the administering agency and the Secretary of Labor for

Provided to Builders Exchange of WA, Inc. For usage Conditions Agreement see www.bxwa.com - Always Verify Scale

purposes of investigation to ascertain compliance with such rules, regulations, and orders.

F. In the event of the contractor's noncompliance with the non-discrimination clauses of this contract or with any of such rules, regulations, or orders, this contract may be canceled, terminated, or suspended in whole or in part and the contractor may be declared ineligible for further Government contracts in accordance with procedures authorized in Executive Order No. 11246 of September 24, 1965, or by rule, regulation, or order of the Secretary of Labor, or as otherwise provided by law.

G. The contractor will include the provisions of paragraphs (1) through (7) in every subcontract or purchase order unless exempted by rules, regulations, or orders of the Secretary of Labor issued pursuant to section 204 of Executive Order No. 11246 of September 24, 1965, so that such provisions will be binding upon each subcontractor or vendor. The contractor will take such action with respect to any subcontract or purchase order as the contracting agency may direct as a means of enforcing such provisions including sanctions for noncompliance: Provided, however, that in the event the contractor becomes involved in, or threatened with, litigation with a subcontractor or vendor as a result of such direction by the contracting agency, the contractor may request the United States to enter into such litigation to protect the interests of the United States.

11. SECTION 3

A. The work to be performed under this contract is subject to the requirements of section 3 of the Housing and Urban Development Act of 1968, as amended, 12 U.S.C. 1701u (section 3). The purpose of section 3 is to ensure that employment and other economic opportunities generated by HUD assistance or HUD-assisted projects covered by section 3, shall, to the greatest extent feasible, be directed to low and very low income persons, particularly persons who are recipients of HUD assistance for housing.

B. The parties to this contract agree to comply with HUD's regulations in 24 CFR part 135, which implement section 3. As evidenced by their execution of this contract, the parties to this contract certify that they are under no contractual or other impediment that would prevent them from complying with the part 135 regulations.

C. The Contractor agrees to send to each labor organization or representative of workers with which the contractor has a collective bargaining agreement or other understanding, if any, a notice advising the labor organization or workers' representative of the contractor's commitments under this section 3 clause, and will post copies of the notice in conspicuous places at the work site where both employees and applicants for training and employment positions can see the notice. The notice shall describe the section 3 preference, shall set forth minimum number of job titles subject to hire, availability of apprenticeship and training

Provided to Builders Exchange of WA, Inc. For usage Conditions Agreement see www.bxwa.com - Always Verify Scale

positions, the qualifications for each; and the name and location of the person(s) taking applications for each of the positions; and the anticipated date the work shall begin.

D. The contractor agrees to include this section 3 clause in every subcontract subject to compliance with regulations in 24 CFR part 135, and agrees to take appropriate action, as provided in an applicable provision of the subcontract or in this section 3 clause, upon a finding that the subcontractor is in violation of the regulations in 24 CFR part 135. The contractor will not subcontract with any subcontractor where the contractor has notice or knowledge that the subcontractor has been found in violation of the regulations in 24 CFR part 135.

E. The contractor will certify that any vacant employment positions, including training positions, that are filled (1) after the contractor is selected but before the contract is executed, and (2) with persons other than those to whom the regulations of 24 CFR part 135 require employment opportunities to be directed, were not filled to circumvent the contractor's obligations under 24 CFR part 135.

F. Noncompliance with HUD's regulations in 24 CFR part 135 may result in sanctions, termination of this contract for default, and debarment or suspension from future HUD assisted contracts.

12. CERTIFICATION OF NONSEGREGATED FACILITIES

By signing the Bid Proposal, the Bidder certifies that he does not maintain or provide for his employees any segregated facilities at any of his establishments, and that he does not permit his employees to perform their services at any location, under his control, where segregated facilities are maintained. The Bidder certifies further that he will not maintain or provide for his employees any segregated facilities at any of his establishments, and that he will not permit his employees to perform their services at any location under his control where segregated facilities are maintained. The Bidder agrees that a breach of this certification will be a violation of the Equal Opportunity clause in any contract resulting from acceptance of this Bid. As used in this certification, the term segregated facilities means any waiting rooms, work areas, restrooms and washrooms, restaurants and other eating areas, time clocks, locker rooms and other storage or dressing areas, parking lots, drinking fountains, recreation or entertainment areas, transportation, and housing facilities provided for employees which are segregated by explicit directive or are in fact segregated on the basis of race, color, religion, or national origin, because of habit, local custom, or otherwise. The Bidder agrees that (except where he has obtained identical certification from proposed sub-contractors for specific time periods) he will obtain identical certifications from proposed subcontractors prior to the award of subcontracts exceeding $10,000 which are not exempt from the provisions of the Equal Opportunity clause, and that he will retain such certifications in his files.

*Note: The penalty for making false statements in offers is prescribed in 18 U.S.C. 1001.

Provided to Builders Exchange of WA, Inc. For usage Conditions Agreement see www.bxwa.com - Always Verify Scale

13. FEDERAL LABOR STANDARDS PROVISIONS

A. Applicability

The Project or Program to which the construction work covered by this contract pertains is being assisted by the United States of America and the following Federal Labor Standards Provisions are included in this Contract pursuant to the provisions applicable to such Federal assistance.

B. Minimum Wages

1. All laborers and mechanics employed or working upon the site of the work (or under the United States Housing Act of 1937 or under the Housing Act of 1949 in the construction or development of the project), will be paid unconditionally and not less often than once a week, and without subsequent deduction or rebate on any account (except such payroll deductions as are permitted by regulations issued by the Secretary of Labor under the Copeland Act (29 CFR Part 3), the full amount of wages and bona fide fringe benefits (or cost equivalents thereof) due at time of payment computed at rates not less than those contained in the wage determination of the Secretary of Labor which is attached hereto and made a part hereof, regardless of any contractual relationship which may be alleged to exist between the contractor and such laborers and mechanics. Contributions made or costs reasonably anticipated for bona fide fringe benefits under Section l(b)(2) of the Davis-Bacon Act on behalf of laborers or mechanics are considered wages paid to such laborers or mechanics, subject to the provisions of 29 CFR 5.5(a)(l)(iv); also, regular contributions made or costs incurred for more than a weekly period (but not less often than quarterly) under plans, funds, or programs, which cover the particular weekly period, are deemed to be constructively made or incurred during such weekly period.

Such laborers and mechanics shall be paid the appropriate wage rate and fringe benefits on the wage determination for the classification of work actually performed, without regard to skill, except as provided in 29 CFR Part 5.5(a)(4). Laborers or mechanics performing work in more than one classification may be compensated at the rate specified for each classification for the time actually worked therein: Provided, That the employer's payroll records accurately set forth the time spent in each classification in which work is performed, The wage determination (including any additional classification and wage rates conformed under 29 CFR Part 5.5(a)(l)(ii) and the Davis-Bacon poster (WH-1321) shall be posted at all times by the contractor and its subcontractors at the site of the work in a prominent and accessible place where it can be easily seen by the workers.

Provided to Builders Exchange of WA, Inc. For usage Conditions Agreement see www.bxwa.com - Always Verify Scale

2. Any class of laborers or mechanics which is not listed in the wage determination and which is to be employed under the contract shall be classified in conformance with the wage determination. HUD shall approve an additional classification and wage rate and fringe benefits therefore only when the following criteria have been met:

   a. The work to be performed by the classification requested is not performed by a classification in the wage determination; and

   b. The classification is utilized in the area by the construction industry; and

   c. The proposed wage rate, including any bona fide fringe benefits, bears a reasonable relationship to the wage rates contained in the wage determination.

3. If the contractor and the laborers and mechanics to be employed in the classification (if known), or their representatives, and HUD or its designee agree on the classification and wage rate (including the amount designated for fringe benefits where appropriate), a report of the action taken shall be sent by HUD or its designee to the Administrator of the Wage and Hour Division, Employment Standards Administration, U.S. Department of Labor, Washington, D.C. 20210. The Administrator, or an authorized representative, will approve, modify, or disapprove every additional classification action within 30 days of receipt and so advise HUD or its designee or will notify HUD or its designee within the 30-day period that additional time is necessary. (Approved by the Office of Management and Budget under OMB control number 1215-0140.)

4. In the event the contractor, the laborers or mechanics to be employed in the classification or their representatives, and HUD or its designee do not agree on the proposed classification and wage rate (including the amount designated for fringe benefits, where appropriate), HUD or its designee shall refer the questions, including the views of all interested parties and the recommendation of HUD or its designee, to the Administrator for determination. The Administrator, or an authorized representative, will issue a determination within 30 days of receipt and so advise) HUD or its designee or will notify HUD or its designee within the 30-day period that additional time is necessary. (Approved by the Office of Management and Budget under OMB Control Number 1215-0140.)

5. The wage rate (including fringe benefits where appropriate) determined pursuant to subparagraphs (2)(B) or (C) of this paragraph, shall be paid to all workers performing work in the classification under this contract from the first day on which work is performed in the classification.

Provided to Builders Exchange of WA, Inc. For usage Conditions Agreement see www.bxwa.com - Always Verify Scale

(i) Whenever the minimum wage rate prescribed in the contract for a class of laborers or mechanics includes a fringe benefit which is not expressed as an hourly rate, the contractor Shall either pay the benefit as stated in the wage determination or shall pay another bona fide fringe benefit or an hourly cash equivalent thereof.

(ii) If the contractor does not make payments to a trustee or other third person, the contractor may consider as part of the wages of any laborer or mechanic the amount of any costs reasonably anticipated in providing bona fide fringe benefits under a plan or program, Provided, That the Secretary of Labor has found, upon the written request of the contractor, that the applicable standards of the Davis-Bacon Act have been met. The Secretary of Labor may require the contractor to set aside in a separate account assets for the meeting of obligations, under the plan or program. (Approved by the Office of Management and Budget under OMB Control Number 1215-01-40.)

C. Withholding

HUD or its designee shall upon its own action or upon written request of an authorized representative of the Department of Labor withhold or cause to be withheld from the contractor under this contract or any other Federal contract with the same prime contractor, or any other Federally-assisted contract subject to Davis-Bacon prevailing wage requirements, which is held by the same prime contractor so much of the accrued payments or advances as may be considered necessary to laborers and mechanics, including apprentices, trainees and helpers, employed by the contractor or any subcontractor the full amount of wages required by the contract. In the event of failure to pay any laborer or mechanic, including any apprentice, trainee or helper, employed or working on the site of the work (or under the United States Housing Act of 1937 or under the Housing Act of 1949 in the construction or development of the project), all or part of the wages requited by the contract, HUD or its designee may, after written notice to the contractor, sponsor, applicant, or owner, take such action as may be necessary to cause the suspension of any further payment advance, or guarantee of funds until such violations have ceased. HUD or its designee may, after written notice to the contractor, disburse such amounts withheld for and on account of the contractor or subcontractor to the respective employees to whom they are due. The Comptroller General shall make such disbursements in the case of direct Davis-Bacon Act contracts.

D. Payrolls and Basic Records

1. Payrolls and basic records relating thereto shall be maintained by the contractor during the course of the work preserved for a period of three years thereafter for all laborers and mechanics working at the site of the work (or under the United States Housing Act of 1937, or under the Housing Act of 1949, in the construction or development of the project). Such records

Provided to Builders Exchange of WA, Inc. For usage Conditions Agreement see www.bxwa.com - Always Verify Scale

shall contain the name, address, and social security number of each such worker, his or her correct classification, hourly rates of wages paid (including rates of contributions or costs anticipated for bona fide fringe benefits or cash equivalent thereof of the types described in Section 1 (b)(2)(B) of the Davis Bacon Act), daily and weekly number of hours worked, deductions made and actual wages paid. Whenever the Secretary of Labor has found under 29 CFR 5.5 (a)(l)(iv) that the wages of any laborer or mechanic include the amount of any costs reasonably anticipated in providing benefits under a plan or described in Section l(b)(2)(B) of the Davis-Bacon Act, the contractor shall maintain records which show that the commitment to provide such benefits is enforceable, that the plan or program is financially responsible, and that the plan or program has been communicated in writing to the laborers or mechanics affected, and records which show the cost anticipated or the actual cost incurred in providing such benefits. Contractors employing apprentices or trainees under approved programs shall maintain written evidence of the registration of apprenticeship programs and certification of trainee programs, the registration of the apprentices and trainees, and the ratios and wage rates prescribed in the applicable programs. (Approved by the Office of Management and Budget under OMB Control Numbers 1215-0140 and 1215-0017.)

a. The contractor shall submit weekly for each week in which any contract work is performed a copy of all payrolls to HUD or its designee if the agency is a party to the contract, but if the agency is not such a party, the contractor will submit the payrolls to the applicant, sponsor, or owner, as the case may be, for transmission to HUD or its designee. The payrolls submitted shall set out accurately and completely all of the information required to be maintained under 29 CFR Part 5.5(a)(3)(I). This information may be submitted in any form desired. Optional Form WH-347 is available for this purpose and may be purchased from the Superintendent of Documents (Federal Stock Number 029-005-00014-1), U.S. Government Printing Office, Washington, DC. 20402. The prime contractor is responsible for the submission of copies of payrolls by all subcontractors. (Approved by the Office of Management and Budget under OMB Control Number 1215-0149.)

2. Each payroll submitted shall be accompanied by a Statement of Compliance, signed by the contractor or subcontractor or his or her agent who pays or supervises the payment of the persons employed under the contract and shall certify the following:

a. That the payroll for the payroll period contains the information required to be maintained under 29 CFR Part 5.5 (a)(3)(I) and that such information is correct and complete;

Provided to Builders Exchange of WA, Inc. For usage Conditions Agreement see www.bxwa.com - Always Verify Scale

b. That each laborer or mechanic (including each helper, apprentice, and trainee) employed on the contract during the payroll period has been paid the full weekly wages earned, without rebate, either directly or indirectly, and that no deductions have been made either directly or indirectly from the full wages earned, other than permissible deductions as set forth in 29 CFR Part 3;

c. That each laborer or mechanic has been paid not less than the applicable wage rates and fringe benefits or cash equivalents for the classification of work performed, as specified in the applicable wage determination incorporated into the contract.

3. The weekly submission of a properly executed certification set forth on the reverse side of Optional Form WH-347 shall satisfy the requirement for submission of the Statement of Compliance required by paragraph A.3.(ii)(b) of this section.

4. The falsification of any of the above certifications may subject the contractor or subcontractor to civil or criminal prosecution under Section 1001 of Title 18 and Section 231 of Title 31 of the United States Code.

5. The contractor or subcontractor shall make the records required under paragraph A.3(I) of this section available for inspection, copying, or transcription by authorized representatives of HUD or its designee or the Department of Labor, and shall permit such representatives to interview employees during working hours on the job. If the contractor or subcontractor fails to submit the required records or to make them available, HUD or its designee may, after written notice to the contractor, sponsor, applicant, or owner, take such action as may be necessary to cause the suspension of any further payment, advance, or guarantee of funds. Furthermore, failure to submit the required records upon request or to make such records available may be grounds for debarment action pursuant to 29 CFR Part 5.12.

E. Apprentices and Trainees

Apprentices will be permitted to work at less than the predetermined rate for the work they performed when they are employed pursuant to and individually registered in a bona fide apprenticeship program registered with the U.S. Department of Labor, Employment and Training Administration, Bureau of Apprenticeship and Training, or with a State Apprenticeship Agency recognized by the Bureau, or if a person is employed in his or her first 90 days of probationary employment as an apprentice in such an apprenticeship program, who is not individually registered in the program, but who has been certified by the Bureau of Apprenticeship and Training or a State Apprenticeship Agency (where appropriate) to be eligible for probationary employment as an apprentice. The

Provided to Builders Exchange of WA, Inc. For usage Conditions Agreement see www.bxwa.com - Always Verify Scale

allowable ratio of apprentices to journeymen on the job site in any craft classification shall not be greater than the ratio permitted to the contractor as to the entire work force under the registered program. Any worker listed on a payroll at an apprentice wage rate, who is not registered or otherwise employed as stated above, shall be paid not less than the applicable wage rate on the wage determination for the classification of work actually performed. In addition, any apprentice performing work on the job site in excess of the ratio permitted under the registered program shall be paid not less than the applicable wage rate on the wage determination for the work actually performed. Where a contractor is performing construction on a project in a locality other than that in which its program is registered, the ratios and wage rates (expressed in percentages of the journeyman's hourly rate) specified in the contractor's or subcontractor's registered program shall be observed. Every apprentice must be paid at not less than the rate specified in the registered program for the apprentice's level of progress, expressed as a percentage of the journeymen hourly rate specified in the applicable wage determination. Apprentices shall be paid fringe benefits in accordance with the provisions of the apprenticeship program. If the apprenticeship program does not specify fringe benefits, apprentices must be paid the full amount of fringe benefits listed on the wage determination for the applicable classification. If the Administrator determines that a different practice prevails for the applicable apprentice classification, fringes shall be paid in accordance with that determination. In the event the Bureau of Apprenticeship and Training, or a state Apprenticeship Agency recognized by the Bureau, withdraws approval of an apprenticeship program, the contractor will no longer be permitted to utilize apprentices at less than the applicable predetermined rate for the work performed until an acceptable program is approved.

F. Trainees

Except as provided in 29 CFR 5.16, trainees will not be permitted to work at less than the predetermined rate for the work performed unless they are employed pursuant to and individually registered in a program which has received prior approval, evidenced by formal certification by the U.S. Department of Labor, Employment and Training Administration. The ratio of trainees to journeymen on the job site shall not be greater than permitted under the plan approved by the Employment and Training Administration. Every trainee must be paid at not less than the rate specified in the approved program for the trainee's level of progress, expressed as a percentage of the journeyman hourly rate specified in the applicable wage determination. Trainees shall be paid fringe benefits in accordance with the provisions of the trainee program. If the trainee program does not mention fringe benefits, trainees shall be paid the full amount of fringe benefits listed on the wage determination unless the Administrator of the Wage and Hour Division determines that there is an apprenticeship program associated with the corresponding journeyman wage rate on the wage determination which provides for less than full fringe benefits for apprentices. Any employee listed on the payroll at a trainee rate who is not registered and participating in a training plan approved by the Employment and Training Administration shall be paid not

Provided to Builders Exchange of WA, Inc. For usage Conditions Agreement see www.bxwa.com - Always Verify Scale

less than the applicable wage rate on the wage determination for the work actually performed. In addition, any trainee performing work on the job site in excess of the ratio permitted under the registered program shall be paid not less than the applicable wage rate on the wage determination for the work actually performed. In the event the Employment and Training Administration withdraws approval of a training program, the contractor will no longer be permitted to utilize trainees at less than the applicable predetermined rate for the work performed until an acceptable program is approved.

G. Equal Employment Opportunity

The utilization of apprentices, trainees and journeymen under this part shall be in conformity with the equal employment opportunity requirements of Executive Order 11246, as amended, and 29 CFR Part 30.

H. Compliance with Copeland Act Requirements

The contractor shall comply with the requirements of 29 CFR Part 3 which are incorporated by reference in this contract.

I. Subcontractors

The contractor or subcontractor will insert in any subcontracts the clauses contained in 29 CFR 5.5(a)(1) through (10) and such other clauses as HUD or its designee may by appropriate instructions require, and also a clause requiring the subcontractors to include these clauses in any lower tier subcontracts. The prime contractor shall be responsible for the compliance by any subcontractor or lower tier subcontractor with all the contract clauses in 29 CFR Part 5.5.

J. Contract termination; debarment

A breach of the contract clauses in 29 CFR 5.5 may be grounds for termination of the contract, and for debarment as a contractor and a subcontractor as provided in 29 CFR 5.12.

K. Compliance with Davis-Bacon and Related Act Requirements

All rulings and interpretations of the Davis-Bacon and Related Acts contained in 29 CFR Parts 1, 3, and 5 are herein incorporated by reference in this contract.

L. Disputes concerning labor standards.

Disputes arising out of the labor standards provisions of this contract shall not be subject to the general disputes clause of this contract. Such disputes shall be resolved in accordance with the procedures of the Department of Labor set forth in 29 CFR Parts 5, 6, and 7. Disputes within the meaning of this clause include

Provided to Builders Exchange of WA, Inc. For usage Conditions Agreement see www.bxwa.com - Always Verify Scale

disputes between the contractor (or any of its subcontractors) and HUD or its designee, the U.S. Department of Labor, or the employees or their representatives.

M. Certification of Eligibility

1. By entering into this contract, the contractor certifies that neither it (nor he or she) nor any person or firm who has an interest in the contractor's firm is a person or firm ineligible to be awarded Government contracts by virtue of Section 3(a) of the Davis-Bacon Act or 29 CFR 5.12(a)(1) or to be awarded HUD contracts or participate in HUD programs pursuant to 24 CFR Part 24.

2. No part of this contract shall be subcontracted to any person or firm ineligible for award of a Government contract by virtue of Section 3(a) of the Davis-Bacon Act or 29 CFR 5.12(a)(1) or to be awarded HUD contracts or participate in HUD programs pursuant to 24 CFR Part 24.

3. The penalty for making false statements is prescribed in the U.S. Criminal Code, 18 U.S.C. 1001. Additionally, U.S. Criminal Code, Section 1010, Title 18, U.S.C., Federal Housing Administration transactions ", provides in part: "Whoever, for the purpose of...influencing in any way the action of such Administration...makes, utters or publishes any" statement, knowing the same to be false..,shall be fined not more than $5,000 or imprisoned not more than two years, or both."

N. Complaints, Proceedings, or Testimony by Employees

No laborer or mechanic to whom the wage, salary, or other labor standards provisions of this Contract are applicable shall be discharged or in any other manner discriminated against by the Contractor or any subcontractor because such employee has filed any complaint or instituted or caused to be instituted any proceeding or has testified, or is about to testify in any proceeding under or relating to the labor standards applicable under this Contract to his employer.

O. Contract Work Hours and Safety Standards Act

As used in this paragraph, the terms laborers and mechanics include watchmen and guards.

1. Overtime requirements

No contractor or subcontractor contracting for any part of the contract work which may require or involve the employment of laborers or mechanics shall require or permit any such laborer or mechanic in any workweek in which he or she is employed on such work to work in excess of forty hours in such workweek unless such laborer or mechanic receives compensation at a rate not less than one and one-half times the basic rate of pay for all hours

Provided to Builders Exchange of WA, Inc. For usage Conditions Agreement see www.bxwa.com - Always Verify Scale

worked in excess of forty hours in such workweek in any contract in an amount in excess of $100,000.

2. Violation; liability for unpaid wages; liquidated damages

In the event of any violation of the clause set forth in subparagraph (1) of this paragraph, the contractor and any subcontractor responsible therefor shall be liable for the unpaid wages.

In addition, such contractor and subcontractor shall be liable to the United States (in the case of work done under contract for the District of Columbia or a territory, to such District or to such territory), for liquidated damages. Such liquidated damages shall be computed with respect to each individual laborer or mechanic, including watchmen and guards, employed in violation of the clause set forth in subparagraph (1) of this paragraph, in the sum of $10 for each calendar day which such individual was required or permitted to work in excess of the standard workweek of forty hours without payment of the overtime wages required by the clause set forth in subparagraph (1) of this paragraph.

3. Withholding for unpaid wages and liquidated damages

HUD or its designee shall upon its own action or upon written request of an authorized representative of the Department of Labor withhold or cause to be withheld, from any moneys payable on account of work performed by the contractor or subcontractor under any such contract or any other Federal contract with the same prime contract, or any other Federally-assisted contract with the same prime contract, or any other Federally-assisted contract subject to the Contract Work Hours and Safety Standards Act, which is held by the same prime contractor such sums as may be determined to be necessary to satisfy any liabilities of such contractor or subcontractor for unpaid wages and liquidated damages as provided in the clause set forth in subparagraph (2) of this paragraph.

4. Subcontracts

The contractor or subcontractor shall insert in any subcontracts the clauses set forth in subparagraph (1) through (4) of this paragraph and also a clause requiring the subcontractors to include these clauses in any lower tier subcontracts. The prime contractor shall be responsible for compliance by any subcontractor or lower tier subcontractor with the clauses set forth in subparagraphs (1) through (4) of this paragraph.

5. Health and Safety

1. No laborer or mechanic shall be required to work in surroundings or under working conditions which are unsanitary, hazardous, or

Provided to Builders Exchange of WA, Inc. For usage Conditions Agreement see www.bxwa.com - Always Verify Scale

dangerous to his health and safety as determined under construction safety and health standards promulgated by the Secretary of Labor by regulation.

2. The Contractor shall comply with all regulations issued by the Secretary of Labor pursuant to Title 29 Part 1926 (formerly part 1518) and failure to comply may result in imposition of sanctions pursuant to the Contract Work Hours and Safety Standards Act (Public Law 91-54, 83 Stat. 96).

3. The Contractor shall include the provisions of this Article in every subcontract so that such provisions will be binding on each sub-contractor. The Contractor shall take such action with respect to any subcontract as the Secretary of Housing and Urban Development or the Secretary of Labor shall direct as a means of enforcing such provisions.

14. CLEAN AIR AND WATER POLLUTION CONTROL ACTS

The contractor shall comply with all applicable standards, orders, or requirements issued under the Federal Water Pollution Control Act (33 USC 1251 et seq.) the Clean Air Act (42 USC 1857 et seq.), Executive Order 11738, and Environmental Protection Agency regulations (40 CFR Parts 15 and 61) including the following requirements:

A. The Contractor warrants that any facility utilized in the performance of this agreement is not listed on the EPA List of Violating Facilities pursuant to 40 CFR 15.20 as of the date of contract award.

B. The Contractor will comply with all the requirements of Section 114 of the Clean Air Act and Section 308 of the Federal Water Pollution Control Act relating to inspection, monitoring, entry, reports, and information, as well as all other requirements specified in said sections and all regulations and guidelines issued thereunder.

C. The Contractor agrees that as a condition for the award of this contract he will notify the owner of the receipt of any communication from the Assistant Administrator of EPA that a facility to be utilized for the contract is under consideration to be listed on the EPA List of Violating Facilities; and will make any such notification promptly prior to contract award.

D. The Contractor will include or cause to be included the criteria and requirements in paragraphs (1) through (4) of this article in every non-exempt subcontract and will take such action as the United States Government or its agencies may direct as a means of enforcing such provisions.

15. SECTION 3 BUSINESS CONCERN REPRESENTATION

Provided to Builders Exchange of WA, Inc. For usage Conditions Agreement see www.bxwa.com - Always Verify Scale

A. The offeror represents and certifies as part of its bid/offer that it:

1. That is 51 percent or more owned by Section 3 residents; or

2. Whose permanent, full-time employees include persons, at least 30 percent of whom are currently Section 3 residents, or within three years of the date of their first employment with the business were Section 3 residents; or

3. That provides evidence of a commitment to subcontract in excess of 25 percent of the dollar award of all subcontracts to be awarded by the business under the proposed contract to Section 3 businesses as defined above and identified below:

Proposed Subcontractor (Name and Address)	Amount of Subcontract

[Continue on separate sheet as needed]

4. is **not** a Section 3 business. **(Do not complete (b))**

B. If a Section 3 business, the offeror also represents and certifies as part of its bid/offer that it is a:

1. Category I Business: A Section 3 business concern that provides economic opportunities for Section 3 residents in the service area or neighborhood in which the Section 3 covered project is located.

2. Describe below the economic opportunities for Section 3 residents in the service area or neighborhood in which the Section 3 covered project is

Provided to Builders Exchange of WA, Inc. For usage Conditions Agreement see www.bxwa.com - Always Verify Scale

located, or reference the part of your Section 3 Opportunities Plan where this is described:

_____

_____

_____

3. Category 2 Business: An entity selected to carry out a HUD Youthbuild program in the metropolitan area, or non-metropolitan county, in which the Section 3-covered funding is expended.

4. Other Section 3 business concern as indicated in (a) above.

Provided to Builders Exchange of WA, Inc. For usage Conditions Agreement see www.bxwa.com - Always Verify Scale

16. **HOLD HARMLESS AND INDEMNIFICATION**
Contractor Indemnification of County

A. This subsection applies to all non-state agencies. The Contractor shall protect, defend, indemnify, and save harmless the County, their officers, employees, and agents from any and all costs, claims, judgments, and/or awards of damages, arising out of, or in any way resulting from, the negligent acts or omissions of the Contractor, its officers, employees, contractors, subcontractors and/or agents, in its performance and/or non-performance of its obligations under this contract. The Contractor agrees that its obligations under this subparagraph extend to any claim, demand, and/or cause of action brought by, or on behalf of, any of its employees or agents. For this purpose, the Contractor, by mutual negotiation, hereby waives, as respects to the County only, any immunity that would otherwise be available against such claims under the Industrial Insurance provisions of RCW, Title 51. In the event the County incurs any judgment, award, and/or cost arising therefrom including attorneys' fees to enforce the provisions of this article, all such fees, expenses, and costs shall be recoverable from the Contractor. To the extent that an Contractor subcontractor fails to satisfy its obligation to defend and indemnify King County, as detailed in XVII, the Contractor shall protect, defend, indemnify and hold harmless King County, its officers, employees, and agents from any and all costs, claims, judgments, and/or awards or damages arising out of, or in any way resulting from the negligent act or omissions of the Contractor's contractor/subcontractor, its officers, employees, and/or agents in connection with or in support of this Contract.

B. Claims shall include, but not be limited to, assertions that use or transfer of software, book, document, report, film, tape, or sound reproduction or material of any kind, delivered hereunder, constitutes an infringement of any copyright, patent, trademark, trade name, and/or otherwise results in unfair trade practice.

C. The Contractor agrees not to perform any acts that include, but are not limited to, use or transfer of software, book, document, report, film, tape, or sound reproduction or material of any kind, delivered hereunder, that constitutes an infringement of any copyright, patent, trademark, trade name, and/or otherwise results in unfair trade practice. The Contractor agrees to indemnify the County for any harm resulting from unfair trade practices.

D. The provisions in this section shall survive the termination and/or duration of the contract term.

E. Nothing contained within this provision shall affect and/or alter the application of any other provision contained within this Contract.

17. **INSURANCE REQUIREMENTS—GENERAL**

A. Minimum Limits of Insurance—Capital Projects

The Contractor shall maintain limits no less than, for:

1. Commercial General Liability: $1,000,000 combined single limit per occurrence by bodily injury, personal injury, and property damage; and for those policies with aggregate limits, a $2,000,000 aggregate limit.

Provided to Builders Exchange of WA, Inc. For usage Conditions Agreement see www.bxwa.com - Always Verify Scale

2. Professional Liability, Errors, and Omissions: $1,000,000, Per Claim and in the Aggregate.

3. Automobile Liability: $1,000,000 combined single limit per accident for bodily injury and property damage if the use of motor vehicles is contemplated

4. Workers' Compensation: Statutory requirements of the state of residency.

5. Stop Gap /Employers Liability: $1,000,000.

6. Property Insurance: One hundred percent replacement value of funded structure.

7. Contractors Pollution Contractor shall provide Contractor's Pollution Liability coverage in the amount of $1,000,000 per occurrence and in the aggregate.

B. Minimum Limits of Insurance—-Building Construction Period

Prior to commencement of building construction and until construction is complete and approved by the Contractor, the Contractor shall cause the construction contractor and related professionals to procure and maintain insurance against claims for injuries to persons or damages to property which may arise from, or in connection with the activities related to this Contract. The Contractor and County shall be a named as additional insureds on liability policies except Workers Compensation and Professional Liability and as Named Insureds on Builders Risk policies. The cost of such insurance shall be paid by the Contractor and/or any of the Contractor's contractors/ subcontractors. The Contractor shall maintain limits no less than, for:

1. Commercial General Liability: $1,000,000 combined single limit per occurrence for bodily injury, personal injury and property damage and $2,000,000 in the aggregate. Endorsement coverage shall be documented and provided on Commercial General Liability Form CG 2010 11/85 or its equivalent.

2. Automobile Liability: $1,000,000 combined single limit per accident for bodily injury and property damage.

3. Professional Liability, Errors & Omissions: $1,000,000, Per Claim and in the Aggregate

4. *Builder's Risk Insurance: One hundred percent replacement cost value.

5. Workers Compensation: Statutory requirements of the State of residency.

6. Stop Gap or Employers Liability Coverage: $1,000,000.

C. Deductibles and Self-Insured Retentions

Any deductibles or self-insured retentions must be declared to, and approved by, the County. The deductible and/or self-insured retention of the policies shall not apply to the Contractor's liability to the County and shall be the sole responsibility of the Contractor.

Provided to Builders Exchange of WA, Inc. For usage Conditions Agreement see www.bxwa.com - Always Verify Scale

*Builders Risk Insurance does not apply to infrastructure projects that do not have a facility or structural component listed as part of the scope in the project activities.

D. Other Insurance Provisions

The insurance policies required in this Contract are to contain, or be endorsed to contain, the following provisions:

1. All Liability Policies except Professional and Workers Compensation

   a. The County, its officers, officials, employees, and agents are to be covered as additional insureds as respects liability arising out of activities performed by or on behalf of the Contractor/Contractor in connection with this Contract. Such coverage shall include Products-Completed Operations.

   b. To the extent of the Contractor's/Contractor's negligence, the Contractor's/ Contractor's insurance coverage shall be primary insurance as respects the County, its officers, officials, employees, and agents. Any insurance and/or self-insurance maintained by the County, its officers, officials, employees, or agents shall not contribute with the Contractor's insurance or benefit the Contractor in any way.

   c. The Contractor's insurance shall apply separately to each insured against whom claim is made and/or lawsuit is brought, except with respect to the limits of the insurer's liability.

2. Property Coverage Policies

   a. The County shall be added to all Property Coverage Policies as a loss payee as its interests may appear.

   b. The County shall be added as a Named Insured as their interests may appear to all Builders Risk policies

3. All Policies

   Coverage shall not be suspended, voided, canceled, reduced in coverage or in limits, except by the reduction of the applicable aggregate limit by claims paid, until after 45 days prior written notice has been given to the County.

E. Acceptability of Insurers

Unless otherwise approved by the County, insurance is to be placed with insurers with a Bests' rating of no less than A: VIII, or, if not rated with Bests, with minimum surpluses the equivalent of Bests' surplus size VIII.

Professional Liability, Errors, and Omissions insurance may be placed with insurers with a Bests' rating of B+VII. Any exception must be approved by the County.

Provided to Builders Exchange of WA, Inc. For usage Conditions Agreement see www.bxwa.com - Always Verify Scale

If, at any time, the foregoing policies shall fail to meet the above requirements, the Contractor shall, upon notice to that effect from the County, promptly obtain a new policy, and shall submit the same to the County, with appropriate certificates and endorsements, for approval.

F. Verification of Coverage

The Contractor shall furnish the County with certificates of insurance and endorsements required by this Contract. The certificates and endorsements for each insurance policy are to be signed by a person authorized by that insurer to bind coverage on its behalf. The certificates and endorsements for each insurance policy are to be on forms approved by the County prior to the commencement of activities associated with the Contract. The County reserves the right to require complete, certified copies of all required insurance policies at any time.

G. Subcontractors

The Contractor shall include all subcontractors as insureds under its policies or shall require separate certificates of insurance and policy endorsements from each subcontractor. Insurance coverages provided by contractors/subcontractors, as evidence of compliance with the insurance requirements of this Contract, shall be subject to all of the requirements stated herein.

H. Additional Federal Nondiscrimination Requirements

The Contractor shall comply with all applicable federal laws prohibiting discrimination, including the following:

1. Executive Order 11063 as amended by Executive Order 12259 and implementing regulations at 24 CFR Part 107;

2. Section 109 of the HCD Act of 1974, as amended (42 USC 5301);

3. The Americans with Disabilities Act (42 USC 1213; 47 USC 155, 201, 218 and 225); and

4. Section 504 of the Rehabilitation Act of 1973 and regulations at 24 CFR Part 8.

I. Prohibited Discriminatory Actions.

1. The Contractor may not, under any program or activity to which this Contract may apply, directly or through contractual or other arrangements, discriminate on the grounds of age, color, creed, familial status, marital status, nationality, religion, race, sex, sexual orientation, or the presence of any, physical, mental or sensory disability. Discriminatory actions may include but are not limited to the following:

   a. Denying any person access to facilities, services, financial aid or other benefits provided under the program or activity.

   b. Denying any person services due to limited English proficiency.

Provided to Builders Exchange of WA, Inc. For usage Conditions Agreement see www.bxwa.com - Always Verify Scale

c. Providing any person with facilities, services, financial aid or other benefits, which are different, or are provided in a different form from that provided to others under the program or activity.

d. Subjecting any person to segregated or separate treatment in any facility or in any matter or process related to receipt of any service or benefit under the program or activity.

e. Restricting in any way access to or in the enjoyment of any advantage or privilege enjoyed by others in connection with facilities, services, financial aid or other benefits under the program or activity.

f. Treating any person differently from others in determining whether the person satisfies any admission, enrollment, eligibility, membership, or other requirement or condition which individuals must meet in order to be provided any facilities, services or other benefit provided under the program or activity.

g. Denying any person any opportunity to participate in a program or activity as an employee.

h. Failing to design and construct facilities for first occupancy after January 26, 1993 that are readily accessible to and usable by individuals with disabilities and failure to remove architectural and communication barriers that are structural in nature in existing facilities, where such removal can be accomplished without difficulty and expense.

2. The Contractor shall not utilize criteria or methods of administration which have the effect of subjecting individuals to discrimination on the basis of age, color, familial status, nationality, race, religion, sex, or sexual orientation; or mental, physical, or sensory disability; or have the effect of defeating or substantially impairing accomplishment of the objectives of the program or activity with respect to individuals of a particular age, color, familial status, nationality, race, religion, sex, or sexual orientation; or the presence of any mental, physical, or sensory disability.

3. The Contractor, in determining the site or location of housing or facilities provided in whole or in part with funds under this Contract, may not make selections of such site or location which have the effect of excluding individuals, denying them benefits, or subjecting them to discrimination on the grounds of age, sex, marital status, familial status, religion, race, creed, color, sexual orientation, nationality, or the presence of any sensory, mental or physical disability; or which have the purpose or effect of defeating or substantially impairing the accomplishment of the objectives of the HCD Act or of the HUD Regulations.

J. Employment Projections

In all solicitations under this Contract, the Contractor shall state that all qualified applicants will be considered for employment. The words "equal opportunity employer" in advertisements shall constitute compliance with this Section.

Provided to Builders Exchange of WA, Inc. For usage Conditions Agreement see www.bxwa.com - Always Verify Scale

18. SUBCONTRACTS AND PURCHASES

A. Subcontract Defined

"Subcontract" shall mean any agreement between the Contractor and a subcontractor or between subcontractors that is based on this Contract, provided that the term "subcontract" does not include the purchase of (1) support services not related to the subject matter of this Contract, or (2) supplies.

B. Writing Required

Any work or services assigned or subcontracted hereunder shall be in writing and must be approved by the County. The Contractor agrees that it is as fully responsible to the County for the acts and omissions of its subcontractors and their employees and agents, as it is for the acts and omissions of its own employees and agents.

C. Required Contract Terms

The Contractor agrees to include the following language verbatim in every subcontract, provider agreement, or purchase agreement for services, which relate to the subject matter of this Contract:

"Subcontractor shall protect, defend, indemnify, and hold harmless King County, its officers, employees, and agents from any and all costs, claims, judgments, and/or awards of damages arising out of, or in any way resulting from the negligent act or omissions of subcontractor, its officers, employee, and/or agents in connection with or in support of this Contract. Subcontractor expressly agrees and understands that King County is a third party beneficiary to this Contract and shall have the right to bring an action against subcontractor to enforce the provisions of this paragraph."

D. Debarred Contractors

The Contractor shall not make any award at any time to any contractor, which is debarred, suspended or excluded, from participation in federal assistance programs under Executive Order 12549, "Debarment and Suspension".

E. Subcontracting Requirements

A Contractor which receives federal funds under this Contract also shall include the following Sections in every subcontract or purchase order for goods and services which are paid for in whole or in part with funds provided under this Contract:

1. The Labor Standards provisions are included in the aforesaid sub-tier contract;
2. The applicable Davis-Bacon wage rates are included in aforesaid sub-tier contract;
3. This Addendum to the contract between contractor and subcontractor is part of the sub- tier contract; and
4. Correction of any infractions of the aforesaid conditions, including infractions by the sub-contractor and any lower tier subcontractors, is a mutual responsibility.

Provided to Builders Exchange of WA, Inc. For usage Conditions Agreement see www.bxwa.com - Always Verify Scale

F. Washington State Prevailing Wages

Contractor shall maintain records indicating that the it has paid all employees performing work under this contract in compliance with state prevailing wage rules set forth in Chapter 39.12 RCW.

1. Contractor shall submit to King County, prior to work, copies of Washington State Statement of Intent to Pay Prevailing Wages".
2. Prior to release of retainage by Owner, "Affidavits of Wages Paid" by all subcontractors shall be submitted to King County as required by RCW 39.12.040. If the Contractor believes that prevailing wage are not required for this project, the Contractor shall provide verification to HCD Community Development that it has consulted with and obtained confirmation from the Washington Department of Labor and Industries that such requirements do not apply and shall submit a signed certification attesting to that fact.
3. If there is a difference between Washington State Prevailing Wages and Federal Davis-Bacon wages, the contractor and all subcontractors shall pay the higher of the two wages.

G. Federal Bid Guarantee and Bond Requirements

1. If the Contractor is subcontracting construction work under this Contract, the subcontract shall require for any construction contracts exceeding $100,000:

   a. A bid guarantee from each bidder equivalent to five percent of the bid price;
   b. A performance bond from the contractor for one hundred percent of the contract price; and
   c. A payment bond from the contractor for one hundred percent of the contract price. The Contractor may, at its discretion, require any of these requirements on construction contracts of less than $100,000. The specific requirements for bid guarantees and bonds are at 24 CFR Part 84.48(c) for nonprofit corporations and 24 CFR Part 85.36(h) for municipal corporations and agencies of the State of Washington.

2. The Contractor shall submit to the HCD Project manager all copies of Project bonds demonstrating compliance with this section and elsewhere defined in the Construction Documents.

H. Failure to Comply is Default

Failure by the Contractor to require compliance with the above terms and conditions in subcontracts shall constitute a breach of this Contract.

I. Fixed Price Procurement –the Contractor agrees to use a more restrictive procurement procedure than that specified in 24 CFR Part 84.40 through 84.48. The Contractor agrees to use only lump sum fixed price contract for all goods and services procured with funds provided under this Contract.

Provided to Builders Exchange of WA, Inc. For usage Conditions Agreement see www.bxwa.com - Always Verify Scale

J. Project Funding Sign During Construction

The Contractor shall include the following phrase on a construction sign erected during construction to identify funding sources used for the project:

"Funding for this project was provided by King County's Community Development Block Grant Program."

19. CONFLICT OF INTEREST

A. Contractor Covenants

The Contractor covenants that no officer, employee, consultant, elected or appointed official, or agent of the Contractor who exercises any functions or responsibilities in connection with the activities funded in whole or in part under this Contract, herein, or any other person who presently exercises any functions or responsibilities in connection with the activities funded herein, shall have any personal financial interest, direct or indirect, in this Contract. The Contractor shall take appropriate steps to assure compliance with this provision.

B. Non-Disclosure is Grounds for Termination

If the Contractor violates the above provisions or does not disclose other interests required to be disclosed pursuant to King County Code Chapter 3.04, or if the Contractor is a municipal corporation which has adopted an employee code of ethics, and violates the adopted employee code of ethics, the County shall not be liable for payment of services rendered pursuant to this Contract. Violation of this Section shall constitute a substantial breach of this Contract and grounds for termination as well as any other right or remedy provided in this Contract or law.

20. RECORD-KEEPING REQUIREMENTS AND SITE VISITS

A. The Contractor shall maintain, for at least six years after completion of all work under this Contract, the following:

1. Records of employment, employment advertisements, application forms, and other pertinent data, records and information related to employment, applications for employment or the administration or delivery of services or any other benefits under this Contract; and

2. Records, including written quotes, bids, estimates or proposals submitted to the Contractor by all businesses seeking to participate on this Contract, and any other information necessary to document the actual use of and payments to subcontractors and suppliers in this Contract, including employment records.

The County may visit, at any time, the site of the work and the Contractor's office to review the foregoing records. The Contractor shall provide every assistance requested by the County during such visits. In all other respects, the Contractor shall make the foregoing records available to the County for inspection and copying upon request. If this Contract involves

Provided to Builders Exchange of WA, Inc. For usage Conditions Agreement see www.bxwa.com - Always Verify Scale

federal funds, the Contractor shall comply with all record keeping requirements set forth in any federal rules, regulations or statutes included or referenced in the contract documents.

B. Sanctions for Violations

Any violation of the mandatory requirements of the provisions of this Section shall be a material breach of contract for which the Contractor may be subject to damages, withholding payment and any other sanctions provided for by the Contract and by applicable law.

C. Additional Federal Nondiscrimination Requirements

The Contractor shall comply with all applicable federal laws prohibiting discrimination, including the following:

1. Executive Order 11063 as amended by Executive Order 12259 and implementing regulations at 24 CFR Part 107;

2. Section 109 of the HCD Act of 1974, as amended (42 USC 5301);

3. The Americans with Disabilities Act (42 USC 1213; 47 USC 155, 201, 218 and 225); and

4. Section 504 of the Rehabilitation Act of 1973 and regulations at 24 CFR Part 8.

D. Employment Projections

In all solicitations under this Contract, the Contractor shall state that all qualified applicants will be considered for employment. The words "equal opportunity employer" in advertisements shall constitute compliance with this Section.

E. Construction Project Requirements

1. Prior to any payment on the project, pre-approval must be received from County staff that federal labor standards and other requirements as described in the Construction Documents have been met. If the Agency pays the Contractor before the County approves, the Contractor will be responsible for any compliance problems.

2. Construction project reporting:

   a. All documentation and communication regarding this project shall be identified by the HCD Project Activity Number and Project Name.

   b. The weekly payroll reports and documentation of construction activity and supporting documents for labor compliance shall be submitted to: King County Housing and Community Development, Attn.: Randy Poplock, 401 Fifth Avenue, Suite 510, Seattle, WA 98104 prior to any payment of CDBG funds for work that the Contractor has applied for payment. Upon review and approval of said documents, the Contractor shall be advised by the County that payment can be made.

Provided to Builders Exchange of WA, Inc. For usage Conditions Agreement see www.bxwa.com - Always Verify Scale

c. The Contractor shall provide documentation to the County at contract/subcontract completion showing that the contract activities were completed in accordance with the Contract.

GENERAL WAGE DECISION

U.S. Department of Labor

The following Federal Davis-Bacon wage rates are made a part of this agreement. The Contractor is responsible for complying with the current Federal wage decision during the construction period.

Provided to Builders Exchange of WA, Inc. For usage Conditions Agreement see www.bxwa.com - Always Verify Scale

VI - SPECIAL PROVISIONS

Provided to Builders Exchange of WA, Inc. For usage Conditions Agreement see www.bxwa.com - Always Verify Scale

TABLE OF CONTENTS

INTRODUCTION TO THE SPECIAL PROVISIONS 1

DESCRIPTION OF WORK 1

DIVISION 1 3

1-01 DEFINITIONS AND TERMS 3
1-01.3 Definitions 3

1-02 BID PROCEDURES AND CONDITIONS 6
1-02.1 Qualifications of Bidder 7
1-02.2 Plans and Specifications 7
1-02.5 Proposal Forms 7
1-02.6 Preparation of Proposal 8
1-02.7 Bid Deposit 9
1-02.9 Delivery of Proposal 9
1-02.10 Withdrawing, Revising, or Supplementing Proposal 10
1-02.13 Irregular Proposals 10
1-02.14 Disqualification of Bidders 11
1-02.15 Pre Award Information 15

1-03 AWARD AND EXECUTION OF CONTRACT 15
1-03.1 Consideration of Bids 16
1-03.3 Execution of Contract 16
1-03.4 Contract Bond 17
1-03.7 Judicial Review 17

1-04 SCOPE OF THE WORK 18
1-04.2 Coordination of Contract Documents, Plans, Special Provisions, Specifications, and Addenda 18
1-04.4 Changes 18
1-04.4(1) Unexpected Site Changes 18
1-04.11 Final Cleanup 19

1-05 CONTROL OF WORK 19
1-05.3 Plans and Working Drawings 19
1-05.4 Conformity With and Deviations From Plans and Stakes 20
1-05.4(1) Construction Surveying – Roadway 20
1-05.4(2) Bridge and Structure Surveys 24
1-05.4(3) Payment 24
1-05.7 Removal of Defective and Unauthorized Work 25
1-05.11 Final Inspections and Operational Testing 26
1-05.11(1) Substantial Completion Date 26
1-05.11(2) Final Inspection and Physical Completion Date 26
1-05.11(3) Operational Testing 27
1-05.11(4) Punch List Completion 28
1-05.13 Superintendents, Labor And Equipment Of Contractor 28

Provided to Builders Exchange of WA, Inc. For usage Conditions Agreement see www.bxwa.com - Always Verify Scale

1-05.15 Method of Serving Notices 28
1-05.15(1) Forms 28
1-05.16 Water and Power 29
1-05.18 Record Drawings 29
1-05.19 Contractor's Daily Diary 31
1-05.20 Stockpiling of Materials and Construction Office 32

1-06 CONTROL OF MATERIAL 33
1-06 ***Buy America*** 33
1-06.1 Approved Materials Prior to Use 34
1-06.1(5) Materials and Equipment Furnished by Owner 34
1-06.6 Recycled Materials 35

1-07 LEGAL RELATIONS AND RESPONSIBILITIES TO THE PUBLIC 35
1-07.1 Laws to be Observed 35
1-07.2 State Sales Tax 36
1-07.2(1) State Sales Tax — Rule 171 36
1-07.2(2) State Sales Tax — Rule 170 37
1-07.2(3) Services 37
1-07.6 Permits and Licenses 37
1-07.9 Wages 38
1-07.9(1) General 38
1-07.9(5) Required Documents 38
1-07.12 Federal Agency Inspection 38
1-07.13 Contractor's Responsibility for Work 38
1-07.13(1) General 39
1-07.13(2) Relief of Responsibility for Completed Work 39
1-07.13(4) Repair of Damage 39
1-07.15 Temporary Water Pollution/Erosion Control 39
1-07.15(1) Spill Prevention, Control and Countermeasures Plan 39
1-07.16 Protection and Restoration of Property 39
1-07.16(1) Private/Public Property 40
1-07.16(1)A Protection and Restoration of Existing Markers and Monuments 40
1-07.16(1)B Maintenance of Project Site and Public Facilities 41
1-07.16(1)C Garbage Service 41
1-07.16(2) Vegetation Protection and Restoration 41
1-07.16(3) Fences, Mailboxes, Incidentals 42
1-07.17 Utilities and Similar Facilities 42
1-07.17(1) Utility Construction, Removal, or Relocation by the Contractor 44
1-07.17(2) Utility Construction, Removal, or Relocation by Others 45
1-07.18 Public Liability and Property Damage Insurance 45
1-07.23 Public Convenience and Safety 46
1-07.23(1) Construction Under Traffic 46
1-07.24 Rights of Way 47

1-08 PROSECUTION AND PROGRESS 47
1-08.0 Preliminary Matters 48
1-08.0(1) Preconstruction Conference 48
1-08.0(2) Hours of Work 49

Provided to Builders Exchange of WA, Inc. For usage Conditions Agreement see www.bxwa.com - Always Verify Scale

1-08.0(3) Preconstruction Submittals 50
1-08.0(4) Weekly Project Meetings 50
1-08.0(5) Progress Schedules 50
1-08.1 Subcontracting 51
1-08.3 Progress Schedule 51
1-08.3(2) Progress Schedule Types 51
1-08.3(2)A Type A Progress Schedule 51
1-08.3(3) Schedule Updates 51
1-08.4 Notice to Proceed and Prosecution of Work 52
1-08.5 Time for Completion 53
1-08.9 Liquidated Damages 54

1-09 MEASUREMENT AND PAYMENT 54
1-09.1 Measurement of Quantities 54
1-09.6 Force Account 55
1-09.9 Payments 55
1-09.11 Claims and Disputes 56
1-09.11(3) Time Limitation and Jurisdiction 56
1-09.13 Claims Resolution 57
1-09.13(3) Claims $250,000 or Less 57

1-10 TEMPORARY TRAFFIC CONTROL 57
1-10.2 Traffic Control Management 57
1-10.2(1) General 57
1-10.2(2) Traffic Control Plans 58
1-10.2(4) Pedestrian Traffic Control 58
1-10.4 Measurement 61
1-10.4(3) Reinstating Unit Items with Lump Sum Traffic Control ..... **Error! Bookmark not defined.**

DIVISION 2 62

2-01 CLEARING, GRUBBING, AND ROADSIDE CLEANUP 62
2-01.2 Disposal of Usable Material and Debris 62
2-01.2(1) Disposal Method No. 1 - Open Burning 62

2-02 REMOVAL OF STRUCTURES AND OBSTRUCTIONS 62
2-02.3 Construction Requirements 62
2-02.3(3) Removal of Pavement, Sidewalks, Curbs, and Gutters 62
2-02.4 Measurement 62
2-02.5 Payment 63

2-03 ROADWAY EXCAVATION AND EMBANKMENT 63
2-03.3 Construction Requirements 63
2-02.3(14) Embankment Construction 63
2-03.3(14)D Compaction and Moisture Control Tests 63
2-03.4 Measurement 63

2-11 TRIMMING AND CLEANUP 64
2-11.1 Description 64

Provided to Builders Exchange of WA, Inc. For usage Conditions Agreement see www.bxwa.com - Always Verify Scale

2-11.4 Measurement....64
2-11.5 Payment....64

DIVISION 5....65

5-04 HOT MIX ASPHALT....65
5-04.2 Materials....65
5-04.3 Construction Requirements....65
5-04.3(8) Mixing....65
5-04.3(8)A Acceptance Sampling and Testing—HMA Mixture....65
5-04.3(8)A1 General....65
5-04.3(8)A4 Definition of Sampling Lot and Sublot....66
5-04.3(8)A5 Test Results....66
5-04.3(8)A6 Test Methods....68
5-04.3(10) Compaction....67
5-04.3(10)B Control....67
5-04.3(10)B1 Control....68
5-04.3(10)B3 Longitudinal Joint Density....69
5-04.3(10)B4 Test Results....69
5-04.3(11) Reject Work....68
5-04.3(11)A General....69
5-04.3(11)C Rejection Without Testing....69
5-04.3(12) Joints....70
5-04.3(13) Surface Smoothness....70
5-04.4 Measurement....69
5-04.5 Payment....70
5-04.5(1) Quality Assurance Price Adjustments....71
5-04.5(1)A Price Adjustments for Quality of HMA Mixture....71
5-04.5(1)B Price Adjustments for Quality of HMA Compaction....71

DIVISION 6....71

6-20 MODULAR BLOCK WALLS....71
6-20.1 Description....71
6-20.2 Materials....71
6-20.1 Construction Requirements....72
6-20.1 Measurement....73
6-20.1 Payment....74

DIVISION 7....75

7-04 STORM SEWERS....75
7-04.2 Materials....75
7-04.3 Construction Requirements....75
7-04.3(1) Cleaning and Testing....75
7-04.3(1)G Television Inspection....75
7-04.5 Payment....75

7-05 MANHOLES, INLETS, CATCH BASINS, AND DRYWELLS....75

Provided to Builders Exchange of WA, Inc. For usage Conditions Agreement see www.bxwa.com - Always Verify Scale

7-05.1 Description 77
7-05.3 Construction Requirements 77
7-05.3(5) Connection to Existing Storm Sewers 77
7-05.4 Measurement 78
7-05.5 Payment 78

7-09 WATER MAINS 77
7-09.2 Materials 77
7-09.3 Construction Requirements 77

7-12 VALVES FOR WATER MAINS 78
7-12.1 Description 77
7-12.2 Materials 77
7-12.3 Construction Requirements 77
7-12.4 Measurement 77
7-12.5 Payment 77

DIVISION 8 88

8-01 EROSION CONTROL AND WATER POLLUTION CONTROL 88
8-01.3 Construction Requirements 88
8-01.3(1) General 88
8-01.3(1)A Submittals 88

8-02 ROADSIDE RESTORATION 89
8-02.2 Materials 89
8-02.3 Construction Requirements 89
8-02.3(1) Responsibility During Construction 89
8-02.3(5) Planting Area Preparation 90
8-02.3(17) Property Restoration 90
8-02.3(18) Root Barrier 90
8-02.4 Measurement 82
8-02.5 Payment 91

8-03 IRRIGATION SYSTEMS 91
8-03.3 Construction Requirements 83
8-03.3(15) Repair or Replace Existing Irrigation System 84
8-03.5 Payment 84

8-04 CURBS, GUTTER, AND SPILLWAYS 91
8-04.3 Construction Requirements 84
8-04.5 Payment 85

8-05 PEDESTRIAN RAILING 91
8-05.1 Description 89
8-05.2 Materials 89
8-05.3 Construction Requirements 85
8-05.4 Measurement 89
8-05.5 Payment 89

Provided to Builders Exchange of WA, Inc. For usage Conditions Agreement see www.bxwa.com - Always Verify Scale

8-06 CEMENT CONCRETE DRIVEWAY ENTRANCES 86
8-06.3 Construction Requirements 86
8-06.4 Measurement 86
8-06.5 Payment 86

8-14 CEMENT CONCRETE SIDEWALKS 86
8-14.3 Construction Requirements 86
8-14.3(3) Placing and Finishing Concrete 86
8-14.3(4) Curing 94
8-14.3(6) Documentation 94
8-14.4 Measurement 95
8-14.5 Payment 95

8-18 MAILBOX SUPPORT 96
8-18.1 Description 96
8-18.3 Construction Requirements 96
8-18.4 Measurement 96
8-18.5 Payment 96

8-20 ILLUMINATION, TRAFFIC SIGNAL SYSTEMS, INTELLIGENT TRANSPORTATION SYSTEMS, AND ELECTRICAL 96
8-20.3 Construction Requirements 89
8-20.3(5) Conduits 89
8-20.3(6) Junction Boxes, Cable Vaults, and Pull Boxes 112
8-20.3(8) Wiring 112
8-20.3(9) Bonding, Grounding 112
8-20.4 Measurement 112
8-20.5 Payment 112

8-37 UTILITY UNDERGROUNDING 105
8-37.1 Description 105
8-37.2 Materials 108
8-37.3 Construction Requirements 108
8-37.4 Measurement 115
8-37.5 Payment 116

DIVISION 9 126

9-14 EROSION CONTROL AND ROADSIDE PLANTING 126
9-14.1 Soil 126
9-14.1(1) Topsoil Type A 126
9-14.8 Root Barrier 127

9-37 DETECTABLE WARNING SURFACE 127
9-37.1 General 127

Provided to Builders Exchange of WA, Inc. For usage Conditions Agreement see www.bxwa.com - Always Verify Scale

INTRODUCTION TO THE SPECIAL PROVISIONS

(August 14, 2013 APWA GSP)

The Work on this project shall be accomplished in accordance with the *Standard Specifications for Road, Bridge and Municipal Construction*, 2014 edition, as issued by the Washington State Department of Transportation (WSDOT) and the American Public Works Association (APWA), Washington State Chapter (hereafter "Standard Specifications"). The Standard Specifications, as modified or supplemented by the Amendments to the Standard Specifications and these Special Provisions, all of which are made a part of the Contract Documents, shall govern all of the Work.

These Special Provisions are made up of both General Special Provisions (GSPs) from various sources, which may have project-specific fill-ins; and project-specific Special Provisions. Each Provision either supplements, modifies, or replaces the comparable Standard Specification, or is a new Provision. The deletion, amendment, alteration, or addition to any subsection or portion of the Standard Specifications is meant to pertain only to that particular portion of the section, and in no way should it be interpreted that the balance of the section does not apply.

The project-specific Special Provisions are not labeled as such. The GSPs are labeled under the headers of each GSP, with the effective date of the GSP and its source. For example:

(March 8, 2013 APWA GSP)
(April 1, 2013 WSDOT GSP)
(May 2013 KENMORE GSP)
(King County GSP)

Also incorporated into the Contract Documents by reference are:

- *Manual on Uniform Traffic Control Devices for Streets and Highways*, currently adopted edition, with Washington State modifications, if any
- *Standard Plans for Road, Bridge and Municipal Construction*, WSDOT/APWA, current edition
- 2007 King County Road Design and Construction Standards (KCDCS)
- Revised Draft Guidelines for Accessible Public Rights-of-Way, November 23, 2005 (commonly referred to as the 2005 PROWAG)

The Contractor shall obtain copies of these publications, at the Contractor's own expense.

DESCRIPTION OF WORK

(April 2015 KENMORE GSP)

Provided to Builders Exchange of WA, Inc. For usage Conditions Agreement see www.bxwa.com - Always Verify Scale

Work for this project consists of constructing *** approximately 700 linear feet of sidewalk on the south side of NE 181st ST between 68th Ave NE and 73rd Ave NE in the City's downtown area. Improvements include but are not limited to new curb and gutter, sidewalk, modular block wall, storm drainage, street trees and grates, irrigation, illumination system and utility conversion to underground, consistent with existing downtown improvements west of the project area. ***

The Work to be performed under this Contract consists of the furnishing of materials, equipment, tools, labor, and other Work or items included thereto (excepting any materials, equipment, utilities, or service, if any specified herein to be furnished by the Contracting Agency or others), and performing all Work as required by the Contract in accordance with the Contract Plans, these Contract Provisions, and the Standard Specifications, all of which are made a part hereof.

If no Bid item is specified for Work or Work has no payment section identified, said Work shall be included in the various Bid items.

✶ ✶ IMPORTANT - PLEASE READ ✶ ✶

These Special Provisions *supplement*, add *new*, *replace*, *revise, or delete* the combined WSDOT Standard Specifications and Amendments. For clarification of the purpose of the sections provided, these Special Provisions have the following added section descriptors:

SUPPLEMENT:	Adds language to the identified section of the Standard Specifications.
NEW:	Specification section/subsection is unique to this project and will not be found in the Standard Specifications.
REPLACE:	A replacement of the entire identified section or subsection of the Standard Specifications.
REVISE:	A revision of the identified sentence, paragraph, or table of the Standard Specifications.
DELETE:	A deletion of an entire section, subsection, or specified text of the Standard Specifications
{Date} WSDOT GSP:	A WSDOT General Special Provision
{Date} APWA GSP:	An APWA General Special Provision.
{Date} KENMORE GSP:	A City of Kenmore General Special Provision.
(******):	A project Special Provision

Provided to Builders Exchange of WA, Inc. For usage Conditions Agreement see www.bxwa.com - Always Verify Scale

DIVISION 1
GENERAL REQUIREMENTS

1-01 DEFINITIONS AND TERMS

1-01.3 Definitions

(January 4, 2016 APWA GSP)

DELETE the heading **Completion Dates** and the three paragraphs that follow it, and REPLACE them with the following:

Dates

Bid Opening Date
The date on which the Contracting Agency publicly opens and reads the Bids.

Award Date
The date of the formal decision of the Contracting Agency to accept the lowest responsible and responsive Bidder for the Work.

Contract Execution Date
The date the Contracting Agency officially binds the Agency to the Contract.

Notice to Proceed Date
The date stated in the Notice to Proceed on which the Contract time begins.

Substantial Completion Date
The day the Engineer determines the Contracting Agency has full and unrestricted use and benefit of the facilities, both from the operational and safety standpoint, any remaining traffic disruptions will be rare and brief, and only minor incidental Work, replacement of temporary substitute facilities, plant establishment periods, or correction or repair remains for the Physical Completion of the total Contract.

Physical Completion Date
The day all of the Work is physically completed on the project. All documentation required by the Contract and required by law does not necessarily need to be furnished by the Contractor by this date.

Completion Date
The day all the Work specified in the Contract is completed and all the obligations of the Contractor under the Contract are fulfilled by the Contractor. All documentation required by the Contract and required by law must be furnished by the Contractor before establishment of this date.

Final Acceptance Date
The date on which the Contracting Agency accepts the Work as complete.

SUPPLEMENT this Section with the following:

Provided to Builders Exchange of WA, Inc. For usage Conditions Agreement see www.bxwa.com - Always Verify Scale

All references in the Standard Specifications, Amendments, or WSDOT General Special Provisions, to the terms "Department of Transportation", "Washington State Transportation Commission", "Commission", "Secretary of Transportation", "Secretary", "Headquarters", and "State Treasurer" shall be revised to read "Contracting Agency".

All references to the terms "State" or "state" shall be revised to read "Contracting Agency" unless the reference is to an administrative agency of the State of Washington, a State statute or regulation, or the context reasonably indicates otherwise.

All references to "State Materials Laboratory" shall be revised to read "Contracting Agency designated location".

All references to "final Contract voucher certification" shall be interpreted to mean the Contracting Agency form(s) by which final payment is authorized, and final completion and acceptance granted.

Additive
A supplemental unit of Work or group of Bid items, identified separately in the Bid Proposal, which may, at the discretion of the Contracting Agency, be awarded in addition to the Base Bid.

Alternate
One of two or more units of Work or groups of Bid items, identified separately in the Bid Proposal, from which the Contracting Agency may make a choice between different methods or material of construction for performing the same Work.

Business Day
A business day is any day from Monday through Friday except holidays as listed in Section 1-08.5.

Contract Bond
The definition in the Standard Specifications for "Contract Bond" applies to whatever bond form(s) are required by the Contract Documents, which may be a combination of a Payment Bond and a Performance Bond.

Contract Documents
See definition for "Contract".

Contract Time
The period of time established by the terms and conditions of the Contract within which the Work must be physically completed.

Provided to Builders Exchange of WA, Inc. For usage Conditions Agreement see www.bxwa.com - Always Verify Scale

Notice of Award
The written notice from the Contracting Agency to the successful Bidder signifying the Contracting Agency's acceptance of the Bid Proposal.

Notice to Proceed
The written notice from the Contracting Agency or Engineer to the Contractor authorizing and directing the Contractor to proceed with the Work and establishing the date on which the Contract time begins.

Traffic
Both vehicular and non-vehicular traffic, such as pedestrians, bicyclists, wheelchairs, and equestrian traffic.

(April 2015 KENMORE GSP)
SUPPLEMENT this Section with the following:

Base Bid
The Work described within the Plans and Specifications prior to adjustments for alternative, additive and deductive Bid items.

Contract Price
Either the unit price, the unit prices, or lump sum price or prices named in the Proposal, or in properly executed change orders.

Days
Days as used in these Special Provisions will be understood to mean working days unless otherwise stated.

Deductive Bid
One or more Bid items/items of Work which must be part of the Bid but may be included in the Contract Award and total amount deducted from the Base Bid.

Engineer
Engineer also includes the City Engineer or duly authorized City representative who is a currently licensed registered Engineer in the State of Washington, or an authorized member of a licensed consulting firm retained by the Contracting Agency for the construction engineering of a specific Public Works project.

Or Equivalent
A manufactured article, material, method, or Work, which in the opinion of the Engineer, is equally desirable or suitable for the purposes intended in the Contract Documents, as compared with similar articles specifically mentioned therein.

Owner

Provided to Builders Exchange of WA, Inc. For usage Conditions Agreement see www.bxwa.com - Always Verify Scale

The City of Kenmore and its authorized representatives, which is a party to the Agreement. Also referred to in the General Special Provisions as Contracting Agency.

Performance Bond/Payment Bond
Same as "Contract Bond" defined in the Standard Specifications.

Points
Wherever reference is made to Engineer's points, this shall mean all marks, bench marks, reference points, stakes, hubs, tack, etc., established by the Engineer for maintaining horizontal and vertical control of the Work.

Project
The Structure or improvement to be constructed in whole or in part through the performance of the Contract.

Project Manual
Same as Contract Provisions.

Proposal Form
The Instructions to Bidders and General Terms and Conditions and the Bid Proposal Documents of the Contract Provisions.

Provide
Means "furnish and install" as specified and shown in the Plans.

Punch List
A list of remaining Contract Work provided after the establishment of the Substantial Completion Date and necessary to reach Physical Completion.

Supplemental Drawings and Instructions
Additional instructions by the Engineer at request of the Contractor by means of Drawings or documents necessary, in the opinion of Engineer, for the proper execution of the Work. Such Drawings and instructions are consistent with the Contract Documents.

Utility
Public or private fixed improvement for the transportation of fluids, gases, power, signals, or communications and shall be understood to include tracks, overhead and underground wires, cables, pipelines, conduits, ducts, sewers, or storm drains.

1-02 BID PROCEDURES AND CONDITIONS

1-02.1 Prequalification of Bidders

Provided to Builders Exchange of WA, Inc. For usage Conditions Agreement see www.bxwa.com - Always Verify Scale

DELETE this Section and REPLACE it with the following:

1-02.1 Qualifications of Bidder

(January 24, 2011 APWA GSP)

Before Award of a Public Works Contract, a Bidder must meet at least the minimum qualifications of RCW 39.04.350(1) to be considered a responsible Bidder and qualified to be awarded a Public Works project.

1-02.2 Plans and Specifications

(June 27, 2011 APWA GSP)

DELETE this Section and REPLACE it with the following:

Information as to where Bid Documents can be obtained or reviewed can be found in the Call for Bids (Advertisement for Bids) for the Work.

After Award of the Contract, Plans and Specifications will be issued to the Contractor at no cost as detailed below:

To Prime Contractor	No. of Sets	Basis of Distribution
Reduced Plans (11" x 17")	2	Furnished automatically upon Award.
Contract Provisions	2	Furnished automatically upon Award.
Large Plans (e.g., 22" x 34")	1	Furnished only upon request.

Additional Plans and Contract Provisions may be obtained by the Contractor from the source stated in the Call for Bids, at the Contractor's own expense.

1-02.5 Proposal Forms

(*June 27, 2011 APWA GSP*)

DELETE this Section and REPLACE it with the following:

The Proposal Form will identify the project and its location and describe the Work. It will also list estimated quantities, units of measurement, the items of Work, and the materials to be furnished at the unit Bid prices. The Bidder shall complete spaces on the Proposal Form that call for, but are not limited to, unit prices; extensions; summations; the total Bid amount; signatures; date; and, where applicable, retail sales taxes and acknowledgment of addenda; the Bidder's name, address, telephone

Provided to Builders Exchange of WA, Inc. For usage Conditions Agreement see www.bxwa.com - Always Verify Scale

number, and signature; the Bidder's D/M/WBE commitment, if applicable; a State of Washington Contractor's Registration Number; and a Business License Number, if applicable. Bids shall be completed by typing or shall be printed in ink by hand, preferably in black ink. The required certifications are included as part of the Proposal Form.

The Contracting Agency reserves the right to arrange the Proposal Forms with alternates and additives, if such be to the advantage of the Contracting Agency. The Bidder shall Bid on all alternates and additives set forth in the Proposal Form unless otherwise specified.

1-02.6 Preparation of Proposal

(*June 27, 2011 APWA GSP*)

SUPPLEMENT the second paragraph with the following:

4. If a minimum Bid amount has been established for any item, the unit or lump sum price must equal or exceed the minimum amount stated.

5. Any correction to a Bid made by interlineation, alteration, or erasure, shall be initialed by the signer of the Bid.

DELETE the last paragraph, and REPLACE it with the following:

The Bidder shall make no stipulation on the Bid Form, nor qualify the Bid in any manner.

A Bid by a corporation shall be executed in the corporate name, by the president or a vice president (or other corporate officer accompanied by evidence of authority to sign).

A Bid by a partnership shall be executed in the partnership name, and signed by a partner. A copy of the partnership agreement shall be submitted with the Bid Form if any D/M/WBE requirements are to be satisfied through such an agreement.

A Bid by a joint venture shall be executed in the joint venture name and signed by a member of the joint venture. A copy of the joint venture agreement shall be submitted with the Bid Form if any D/W/MBE requirements are to be satisfied through such an agreement.

(August 2, 2004 WSDOT GSP)

The fifth and sixth paragraphs of this Section are DELETED.

Provided to Builders Exchange of WA, Inc. For usage Conditions Agreement see www.bxwa.com - Always Verify Scale

1-02.7 Bid Deposit

(March 8, 2013 APWA GSP)

SUPPLEMENT this Section with the following:

Bid bonds shall contain the following:

1. Contracting Agency-assigned number for the project;
2. Name of the project;
3. The Contracting Agency named as obligee;
4. The amount of the Bid bond stated either as a dollar figure or as a percentage which represents five percent of the maximum Bid amount that could be awarded;
5. Signature of the Bidder's officer empowered to sign official statements. The signature of the person authorized to submit the Bid should agree with the signature on the bond, and the title of the person must accompany the said signature;
6. The signature of the Surety's officer empowered to sign the bond and the power of attorney.

If so stated in the Contract Provisions, the Bidder must use the bond form included in the Contract Provisions.

If so stated in the Contract Provisions, cash will not be accepted for a Bid deposit.

1-02.9 Delivery of Proposal

(August 15, 2012 APWA GSP, Option A)

DELETE this Section and REPLACE it with the following:

Each Proposal shall be submitted in a sealed envelope, with the Project Name and Project Number as stated in the Call for Bids clearly marked on the outside of the envelope, or as otherwise required in the Bid Documents, to ensure proper handling and delivery.

If the project has FHWA funding and requires DBE Written Confirmation Documents or Good Faith Effort Documentation, then to be considered responsive, the Bidder shall submit with their Bid Proposal, written Confirmation Documentation from each DBE firm listed on the Bidder's completed DBE Utilization Certification, form 272-056A EF, as required by Section 1-02.6.

The Contracting Agency will not open or consider any Bid Proposal that is received after the time specified in the Call for Bids for receipt of Bid Proposals, or received in a location other than that specified in the Call for Bids.

Provided to Builders Exchange of WA, Inc. For usage Conditions Agreement see www.bxwa.com - Always Verify Scale

1-02.10 Withdrawing, Revising, or Supplementing Proposal

(July 23, 2015 APWA GSP)

DELETE this Section, and REPLACE it with the following:

After submitting a physical Bid Proposal to the Contracting Agency, the Bidder may withdraw, revise, or supplement it if:

1. The Bidder submits a written request signed by an authorized person and physically delivers it to the place designated for receipt of Bid Proposals, and
2. The Contracting Agency receives the request before the time set for receipt of Bid Proposals, and
3. The revised or supplemented Bid Proposal (if any) is received by the Contracting Agency before the time set for receipt of Bid Proposals.

If the Bidder's request to withdraw, revise, or supplement its Bid Proposal is received before the time set for receipt of Bid Proposals, the Contracting Agency will return the unopened Proposal package to the Bidder. The Bidder must then submit the revised or supplemented package in its entirety. If the Bidder does not submit a revised or supplemented package, then its Bid shall be considered withdrawn.

Late revised or supplemented Bid Proposals or late withdrawal requests will be date recorded by the Contracting Agency and returned unopened. Mailed, emailed, or faxed requests to withdraw, revise, or supplement a Bid Proposal are not acceptable.

1-02.13 Irregular Proposals

(January 4, 2016 APWA GSP)

DELETE this Section and REPLACE it with the following:

1. A Proposal will be considered irregular and will be rejected if:
    a. The Bidder is not prequalified when so required;
    b. The authorized Proposal form furnished by the Contracting Agency is not used or is altered;
    c. The completed Proposal form contains any unauthorized additions, deletions, alternate Bids, or conditions;
    d. The Bidder adds provisions reserving the right to reject or accept the Award, or enter into the Contract;
    e. A price per unit cannot be determined from the Bid Proposal;
    f. The Proposal form is not properly executed;
    g. The Bidder fails to submit or properly complete a Subcontractor list, if applicable, as required in Section 1-02.6;
    h. The Bidder fails to submit or properly complete a Disadvantaged Business Enterprise Certification, if applicable, as required in Section 1-02.6;

Provided to Builders Exchange of WA, Inc. For usage Conditions Agreement see www.bxwa.com - Always Verify Scale

i. The Bidder fails to submit written confirmation from each DBE firm listed on the Bidder's completed DBE Utilization Certification that they are in agreement with the Bidders DBE participation commitment, if applicable, as required in Section 1-02.6, or if the written confirmation that is submitted fails to meet the requirements of the Special Provisions;

j The Bidder fails to submit DBE Good Faith Effort documentation, if applicable, as required in Section 1-02.6, or if the documentation that is submitted fails to demonstrate that a Good Faith Effort to meet the Condition of Award was made;

k. The Bid Proposal does not constitute a definite and unqualified offer to meet the material terms of the Bid invitation; or

l. More than one Proposal is submitted for the same project from a Bidder under the same or different names.

2. A Proposal may be considered irregular and may be rejected if:

a. The Proposal does not include a unit price for every Bid item;

b. Any of the unit prices are excessively unbalanced (either above or below the amount of a reasonable Bid) to the potential detriment of the Contracting Agency;

c. Receipt of Addenda is not acknowledged;

d. A member of a joint venture or partnership and the joint venture or partnership submit Proposals for the same project (in such an instance, both Bids may be rejected); or

e. If Proposal form entries are not made in ink.

1-02.14 Disqualification of Bidders

(March 8, 2013 APWA GSP, Option B)

DELETE this Section and REPLACE it with the following:

A Bidder will be deemed not responsible if the Bidder does not meet the mandatory Bidder responsibility criteria in RCW 39.04.350(1), as amended; or does not meet the following Supplemental Criteria:

1. **<u>Delinquent State Taxes</u>**

A <u>Criterion</u>: The Bidder shall not owe delinquent taxes to the Washington State Department of Revenue without a payment plan approved by the Department of Revenue.

B. <u>Documentation</u>: The Bidder shall not be listed on the Washington State Department of Revenue's "Delinquent Taxpayer List" website: http://dor.wa.gov/content/fileandpaytaxes/latefiling/dtlwest.aspx , or if they are so listed, they must submit a written payment plan approved by

Provided to Builders Exchange of WA, Inc. For usage Conditions Agreement see www.bxwa.com - Always Verify Scale

the Department of Revenue, to the Contracting Agency by the deadline listed below.

2. **Federal Debarment**

A Criterion: The Bidder shall not currently be debarred or suspended by the Federal government.

B. Documentation: The Bidder shall not be listed as having an "active exclusion" on the U.S. government's "System for Award Management" database (www.sam.gov).

3. **Subcontractor Responsibility**

A Criterion: The Bidder's standard subcontract form shall include the Subcontractor responsibility language required by RCW 39.06.020, and the Bidder shall have an established procedure which it utilizes to validate the responsibility of each of its Subcontractors. The Bidder's subcontract form shall also include a requirement that each of its Subcontractors shall have and document a similar procedure to determine whether the sub-tier Subcontractors with whom it contracts are also "responsible" Subcontractors as defined by RCW 39.06.020.

B. Documentation: The Bidder, if and when required as detailed below, shall submit a copy of its standard subcontract form for review by the Contracting Agency, and a written description of its procedure for validating the responsibility of Subcontractors with which it contracts.

4. **Prevailing Wages**

A Criterion: The Bidder shall not have a record of prevailing wage violations as determined by WA Labor & Industries in the five years prior to the Bid submittal date, that demonstrates a pattern of failing to pay workers prevailing wages, unless there are extenuating circumstances and such circumstances are deemed acceptable to the Contracting Agency.

B. Documentation: The Bidder, if and when required as detailed below, shall submit a list of all prevailing wage violations in the five years prior to the Bid submittal date, along with an explanation of each violation and how it was resolved. The Contracting Agency will evaluate these explanations and the resolution of each complaint to determine whether the violation demonstrate a pattern of failing to pay its workers prevailing wages as required.

Provided to Builders Exchange of WA, Inc. For usage Conditions Agreement see www.bxwa.com - Always Verify Scale

5. **Claims Against Retainage and Bonds**

A Criterion: The Bidder shall not have a record of excessive claims filed against the retainage or payment bonds for Public Works projects in the three years prior to the Bid submittal date, that demonstrate a lack of effective management by the Bidder of making timely and appropriate payments to its Subcontractors, suppliers, and workers, unless there are extenuating circumstances and such circumstances are deemed acceptable to the Contracting Agency.

B. Documentation: The Bidder, if and when required as detailed below, shall submit a list of the Public Works projects completed in the three years prior to the Bid submittal date that have had claims against retainage and bonds and include for each project the following information:

- Name of project
- The owner and contact information for the owner;
- A list of claims filed against the retainage and/or payment bond for any of the projects listed;
- A written explanation of the circumstances surrounding each claim and the ultimate resolution of the claim.

6. **Public Bidding Crime**

A Criterion: The Bidder and/or its owners shall not have been convicted of a crime involving Bidding on a Public Works Contract in the five years prior to the Bid submittal date.

B. Documentation: The Bidder, if and when required as detailed below, shall sign a statement (on a form to be provided by the Contracting Agency) that the Bidder and/or its owners have not been convicted of a crime involving Bidding on a Public Works Contract.

7. **Termination for Cause / Termination for Default**

A Criterion: The Bidder shall not have had any Public Works Contract terminated for cause or terminated for default by a government agency in the five years prior to the Bid submittal date, unless there are extenuating circumstances and such circumstances are deemed acceptable to the Contracting Agency.

B. Documentation: The Bidder, if and when required as detailed below, shall sign a statement (on a form to be provided by the Contracting Agency) that the Bidder has not had any Public Works Contract terminated for

Provided to Builders Exchange of WA, Inc. For usage Conditions Agreement see www.bxwa.com - Always Verify Scale

cause or terminated for default by a government agency in the five years prior to the Bid submittal date; or if Bidder was terminated, describe the circumstances.

8. **Lawsuits**

A Criterion: The Bidder shall not have lawsuits with judgments entered against the Bidder in the five years prior to the Bid submittal date that demonstrate a pattern of failing to meet the terms of Contracts, unless there are extenuating circumstances and such circumstances are deemed acceptable to the Contracting Agency

B. Documentation: The Bidder, if and when required as detailed below, shall sign a statement (on a form to be provided by the Contracting Agency) that the Bidder has not had any lawsuits with judgments entered against the Bidder in the five years prior to the Bid submittal date that demonstrate a pattern of failing to meet the terms of Contracts, or shall submit a list of all lawsuits with judgments entered against the Bidder in the five years prior to the Bid submittal date, along with a written explanation of the circumstances surrounding each such lawsuit. The Contracting Agency shall evaluate these explanations to determine whether the lawsuits demonstrate a pattern of failing to meet of terms of construction related Contracts

As evidence that the Bidder meets the mandatory and supplemental responsibility criteria stated above, the apparent two lowest Bidders must submit to the Contracting Agency by 12:00 P.M. (noon) of the second business day following the Bid submittal deadline, a written statement verifying that the Bidder meets all of the mandatory and supplemental criteria together with supporting documentation including but not limited to that detailed above (sufficient in the sole judgment of the Contracting Agency) demonstrating compliance with all mandatory and supplemental responsibility criteria. The Contracting Agency reserves the right to request such documentation from other Bidders as well, and to request further documentation as needed to assess Bidder responsibility. The Contracting Agency also reserves the right to obtain information from third-parties and independent sources of information concerning a Bidder's compliance with the mandatory and supplemental criteria, and to use that information in their evaluation. The Contracting Agency may (but is not required to) consider mitigating factors in determining whether the Bidder complies with the requirements of the supplemental criteria.

The basis for evaluation of Bidder compliance with these mandatory and supplemental criteria shall include any documents or facts obtained by Contracting Agency (whether from the Bidder or third parties) including but not limited to: (i)

Provided to Builders Exchange of WA, Inc. For usage Conditions Agreement see www.bxwa.com - Always Verify Scale

financial, historical, or operational data from the Bidder; (ii) information obtained directly by the Contracting Agency from others for whom the Bidder has worked, or other public agencies or private enterprises; and (iii) any additional information obtained by the Contracting Agency which is believed to be relevant to the matter.

If the Contracting Agency determines the Bidder does not meet the Bidder responsibility criteria above and is therefore not a responsible Bidder, the Contracting Agency shall notify the Bidder in writing, with the reasons for its determination. If the Bidder disagrees with this determination, it may appeal the determination within two (2) business days of the Contracting Agency's determination by presenting its appeal and any additional information to the Contracting Agency. The Contracting Agency will consider the appeal and any additional information before issuing its final determination. If the final determination affirms that the Bidder is not responsible, the Contracting Agency will not execute a Contract with any other Bidder until at least two business days after the Bidder determined to be not responsible has received the Contracting Agency's final determination.

Request to Change Supplemental Bidder Responsibility Criteria Prior to Bid: Bidders with concerns about the relevancy or restrictiveness of the Supplemental Bidder Responsibility Criteria may make or submit requests to the Contracting Agency to modify the criteria. Such requests shall be in writing, describe the nature of the concerns, and propose specific modifications to the criteria. Bidders shall submit such requests to the Contracting Agency no later than five (5) business days prior to the Bid submittal deadline and address the request to the Project Engineer or such other person designated by the Contracting Agency in the Bid Documents.

1-02.15 Pre-Award Information

(August 14, 2013 APWA GSP)

REVISE this Section to read:

Before awarding any Contract, the Contracting Agency may require one or more of these items or actions of the apparent lowest responsible Bidder:

1. A complete statement of the origin, composition, and manufacture of any or all materials to be used,
2. Samples of these materials for quality and fitness tests,
3. A progress schedule (in a form the Contracting Agency requires) showing the order of and time required for the various phases of the Work,
4. A breakdown of costs assigned to any Bid item,
5. Attendance at a conference with the Engineer or representatives of the Engineer,
6. Obtain, and furnish a copy of, a business license to do business in the city or county where the Work is located.

Provided to Builders Exchange of WA, Inc. For usage Conditions Agreement see www.bxwa.com - Always Verify Scale

7. Any other information or action taken that is deemed necessary to ensure that the Bidder is the lowest responsible Bidder.

1-03 AWARD AND EXECUTION OF CONTRACT

1-03.1 Consideration of Bids

(January 23, 2006 APWA GSP)

REVISE the first paragraph to read:

After opening and reading Proposals, the Contracting Agency will check them for correctness of extensions of the prices per unit and the total price. If a discrepancy exists between the price per unit and the extended amount of any Bid item, the price per unit will control. If a minimum Bid amount has been established for any item and the Bidder's unit or lump sum price is less than the minimum specified amount, the Contracting Agency will unilaterally revise the unit or lump sum price, to the minimum specified amount and recalculate the extension. The total of extensions, corrected where necessary, including sales taxes where applicable and such additives and/or alternates as selected by the Contracting Agency, will be used by the Contracting Agency for Award purposes and to fix the Awarded Contract Price amount and the amount of the Contract Bond.

1-03.3 Execution of Contract

(October 1, 2005 APWA GSP)

REVISE this Section to read:

Copies of the Contract Provisions, including the unsigned Form of Contract, will be available for signature by the successful Bidder on the first business day following Award. The number of copies to be executed by the Contractor will be determined by the Contracting Agency.

Within twenty (20) calendar days after the Award date, the successful Bidder shall return the signed Contracting Agency-prepared Contract, an insurance certification as required by Section 1-07.18, and a satisfactory bond as required by law and Section 1-03.4. Before execution of the Contract by the Contracting Agency, the successful Bidder shall provide any pre-Award information the Contracting Agency may require under Section 1-02.15.

Until the Contracting Agency executes a Contract, no Proposal shall bind the Contracting Agency nor shall any Work begin within the project limits or within Contracting Agency-furnished sites. The Contractor shall bear all risks for any Work begun outside such areas and for any materials ordered before the Contract is executed by the Contracting Agency.

Provided to Builders Exchange of WA, Inc. For usage Conditions Agreement see www.bxwa.com - Always Verify Scale

If the Bidder experiences circumstances beyond their control that prevents return of the Contract Documents within the calendar days after the Award date stated above, the Contracting Agency may grant up to a maximum of five (5) additional calendar days for return of the documents, provided the Contracting Agency deems the circumstances warrant it.

1-03.4 Contract Bond

(July 23, 2015 APWA GSP)

DELETE the first paragraph and REPLACE it with the following:

The successful Bidder shall provide executed payment and performance bond(s) for the full Contract amount. The bond may be a combined payment and performance bond; or be separate payment and performance bonds. In the case of separate payment and performance bonds, each shall be for the full Contract amount. The bond(s) shall:

1. Be on Contracting Agency-furnished form(s);
2. Be signed by an approved Surety (or Sureties) that:
   a. Is registered with the Washington State Insurance Commissioner, and
   b. Appears on the current Authorized Insurance List in the State of Washington published by the Office of the Insurance Commissioner,
3. Guarantee that the Contractor will perform and comply with all obligations, duties, and conditions under the Contract, including but not limited to the duty and obligation to indemnify, defend, and protect the Contracting Agency against all losses and claims related directly or indirectly from any failure:
   a. Of the Contractor (or any of the employees, Subcontractors, or lower tier Subcontractors of the Contractor) to faithfully perform and comply with all Contract obligations, conditions, and duties, or
   b. Of the Contractor (or the Subcontractors or lower tier Subcontractors of the Contractor) to pay all laborers, mechanics, Subcontractors, lower tier Subcontractors, material person, or any other person who provides supplies or provisions for carrying out the Work;
4. Be conditioned upon the payment of taxes, increases, and penalties incurred on the project under Titles 50, 51, and 82 RCW; and
5. Be accompanied by a power of attorney for the Surety's officer empowered to sign the bond; and
6. Be signed by an officer of the Contractor empowered to sign official statements (sole proprietor or partner). If the Contractor is a corporation, the bond(s) must be signed by the president or vice president, unless accompanied by written proof of the authority of the individual signing the bond(s) to bind the corporation (i.e., corporate resolution, power of attorney, or a letter to such effect signed by the president or vice president).

Provided to Builders Exchange of WA, Inc. For usage Conditions Agreement see www.bxwa.com - Always Verify Scale

1-03.7 Judicial Review

(July 23, 2015 APWA GSP)

REVISE this Section to read:

Any decision made by the Contracting Agency regarding the Award and execution of the Contract or Bid rejection shall be conclusive subject to the scope of judicial review permitted under Washington Law. Such review, if any, shall be timely filed in the Superior Court of the county where the Contracting Agency headquarters is located, provided that where an action is asserted against a county, RCW 36.01.05 shall control venue and jurisdiction.

1-04 SCOPE OF THE WORK

1-04.2 Coordination of Contract Documents, Plans, Special Provisions, Specifications, and Addenda

(March 13, 2012 APWA GSP)

REVISE the second paragraph to read:

Any inconsistency in the parts of the contract shall be resolved by following this order of precedence (e.g., 1 presiding over 2, 2 over 3, 3 over 4, and so forth):

1. Addenda
2. Proposal Form
3. Special Provisions
4. Contract Plans
5. Amendments to the Standard Specifications
6. Standard Specifications
7. Contracting Agency's Standard Plans or Details (if any), and
8. WSDOT Standard Plans for Road, Bridge, and Municipal Construction.

1-04.4 Changes

(*April 2015 KENMORE GSP*)

1-04.4(1) Minor Changes

REPLACE this Section with the following:

1-04.4(1) Unexpected Site Changes

Payments or credits for changes amounting to $15,000 or less may be made under the Bid item "Unexpected Site Changes". At the discretion of the Contracting Agency, this

Provided to Builders Exchange of WA, Inc. For usage Conditions Agreement see www.bxwa.com - Always Verify Scale

procedure for Unexpected Site Changes may be used in lieu of the more formal procedure as outlined in Section 1-04.4, Changes.

The Contractor will be provided a copy of the completed order for Unexpected Site Changes. The agreement for the Unexpected Site Changes will be documented by signature of the Contractor, or notation of verbal agreement. If the Contractor is in disagreement with anything required by the order for Unexpected Site Changes, the Contractor may protest the order as provided in Section 1-04.5.

Payments will be determined in accordance with Section 1-09.6. For the purpose of providing a common Proposal for all Bidders, the Contracting Agency has entered an amount for "Unexpected Site Changes" in the Proposal to become a part of the total Bid by the Contractor. Credits will be determined in accordance with Section 1-09.4.

1-04.11 Final Cleanup

(*April 2015 KENMORE GSP*)
SUPPLEMENT this Section with the following:

Final cleanup shall also include cleaning out all storm drain pipe and Structures and any ditches that may have been contaminated during construction as a direct result of the Contractor's activities.

1-05 CONTROL OF WORK

1-05.3 Plans and Working Drawings

(*April 2015 KENMORE GSP*)
SUPPLEMENT this Section with the following:

Shop Drawings, material product information, and/or catalog cuts shall be furnished by the Contractor for all items indicated in various sections of the Contract Documents. An electronic copy shall be submitted for Engineer's review. A minimum of two (2) hard copies may be submitted in-lieu of an electronic copy.

Drawings shall show the name of the project, the name of the Contractor and, if any, the names of suppliers, manufacturers and Subcontractors. Shop Drawings shall be submitted promptly and in orderly sequence so as to cause no delay in prosecution of the Work.

The Engineer will return submittals to the Contractor with any comments noted thereon. If the Contractor makes any changes to the submittal, resubmit in the same manner as specified for the original submittals. The Contractor, in the letter of transmittal accompanying resubmittal, shall direct specific attention to any revisions made.

Provided to Builders Exchange of WA, Inc. For usage Conditions Agreement see www.bxwa.com - Always Verify Scale

One copy of all submittals shall be kept constantly accessible at the construction site.

During the course of construction, the Contractor shall maintain a set of red-lined as-built Working Drawings reflecting changes to the Work from the Bid documents. After all construction is completed, the Contractor shall provide one (1) copy of the red lined as-built Drawings of all new, modified, or relocated Work.

As Work progresses, the Contractor shall review current as-built information with City Inspectors.

REVISE the fifth sentence of the third paragraph with the following:

Unless stated elsewhere in the Contract, the Engineer will require up to ***five (5)*** working days from the date the submittals or resubmittals are received until they are reviewed and returned to the Contractor.

SUPPLEMENT the second paragraph with the following:

All such Drawings, Specifications and copies thereof prepared or furnished by the Engineer are the Contracting Agency's property. They are not to be used on other Work.

1-05.4 Conformity With and Deviations From Plans and Stakes
(April 2015 KENMORE GSP)

SUPPLEMENT this Section with the following:

The Contractor shall establish and maintain temporary construction easement lines and property corner stakes along the City Right of Way for all private properties adjacent to the project for the duration of the project.

1-05.4(1) Construction Surveying – Roadway
(*April 2015 KENMORE GSP*)

NEW Section:

Copies of the Contracting Agency-provided primary survey control data are available for the Bidder's inspection at the office of the Project Engineer.

The Contractor shall be responsible for setting, maintaining, and resetting all alignment stakes, slope stakes, and grades necessary for the construction of the Roadbed, drainage, surfacing, paving, channelization and pavement marking, illumination and signals, guardrails and barriers, and signing. Except for the survey

Provided to Builders Exchange of WA, Inc. For usage Conditions Agreement see www.bxwa.com - Always Verify Scale

control data to be furnished by the Contracting Agency, calculations, surveying, and measuring required for setting and maintaining the necessary lines and grades shall be the Contractor's responsibility.

The Contractor shall inform the Engineer when monuments are discovered that were not identified in the Plans and construction activity may disturb or damage the monuments. All monuments noted in the Plans as "DO NOT DISTURB" shall be protected throughout the length of the project or be replaced at the Contractor's expense.

Detailed survey records shall be maintained, including a description of the Work performed on each shift, the methods utilized, and the control points used. The record shall be adequate to allow the survey to be reproduced. A copy of each day's record shall be provided to the Engineer within three (3) working days after the end of the shift.

The meaning of words and terms used in this provision shall be as listed in "Definitions of Surveying and Associated Terms" current edition, published by the American Congress on Surveying and Mapping and the American Society of Civil Engineers.

The survey Work shall include but not be limited to the following:

1. Verify the primary horizontal and vertical control furnished by the Contracting Agency, and expand into secondary control by adding stakes and hubs as well as additional survey control needed for the project. Provide descriptions of secondary control to the Contracting Agency. The description shall include coordinates and elevations of all secondary control points.

2. Establish, the centerlines of all alignments, by placing hubs, stakes, or marks on centerline or on offsets to centerline at all curve points (PCs, PTs, and PIs) and at points on the alignments spaced no further than 50 feet.

3. Establish clearing limits, placing stakes at all angle points and at intermediate points not more than 50 feet apart. The clearing and grubbing limits shall be 5 feet beyond the toe of a fill and 10 feet beyond the top of a cut unless otherwise shown in the Plans.

4. Establish grading limits, placing slope stakes at centerline increments not more than 50 feet apart. Establish offset reference to all slope stakes. If Global Positioning Satellite (GS) Machine controls are used to provide grade control, then slope stakes may be omitted at the discretion of the Contractor.

Provided to Builders Exchange of WA, Inc. For usage Conditions Agreement see www.bxwa.com - Always Verify Scale

5. Establish the horizontal and vertical location of all drainage features, placing offset stakes to all drainage Structures and to pipes at a horizontal interval not greater than 25 feet.

6. Establish Roadbed and surfacing elevations by placing stakes at the top of Subgrade and at the top of each course of surfacing. Subgrade and surfacing stakes shall be set at horizontal intervals not greater than 50 feet in tangent sections, 25 feet in curve sections with a radius less than 300 feet, and at 10-foot intervals in intersection radii with a radius less than 10 feet. Transversely, stakes shall be placed at all locations where the Roadway slope changes and at additional points such that the transverse spacing of stakes is not more than 12 feet. If GPS Machine Controls are used to provide grade control, then Roadbed and surfacing stakes may be omitted at the discretion of the Contractor.

7. Establish intermediate elevation benchmarks as needed to check Work throughout the project.

8. Provide references for paving pins at 25-foot intervals or provide simultaneous surveying to establish location and elevation of paving pins as they are being placed.

9. For all other types of construction included in this provision, (including but not limited to channelization and pavement marking, illumination and signals, guardrails and barriers, and signing) provide staking and layout as necessary to adequately locate, construct, and check the specific construction activity.

10. The Contractor shall determine if changes are needed to the profiles or Roadway sections shown in the Contract Plans in order to achieve proper smoothness and drainage where matching into existing features, such as a smooth transition from new pavement to existing pavement. The Contractor shall submit these changes to the Project Engineer for review and approval ten (10) days prior to the beginning of Work.

The Contractor shall provide the Contracting Agency copies of any calculations and staking data when requested by the Engineer.

To facilitate the establishment of these lines and elevations, the Contracting Agency will provide the Contractor with primary survey control information consisting of descriptions of two (2) primary control points used for the horizontal and vertical control, and descriptions of two (2) additional primary control points for every additional three (3) miles of project length. Primary control points will be described by reference to the project alignment and the coordinate system and elevation datum utilized by the project. In addition, the Contracting Agency will supply horizontal

Provided to Builders Exchange of WA, Inc. For usage Conditions Agreement see www.bxwa.com - Always Verify Scale

coordinates for the beginning and ending points and for each Point of Intersection (PI) on each alignment included in the project.

The Contractor shall ensure a surveying accuracy within the following tolerances:

	Vertical	Horizontal
Slope stakes	±0.10 feet	±0.10 feet
Subgrade grade stakes set 0.04 feet below grade	±0.01 feet	±0.5 feet (parallel to alignment) ±0.1 feet (normal to alignment)
Stationing on Roadway	N/A	±0.1 feet
Alignment on Roadway	N/A	±0.04 feet
Surfacing grade stakes	±0.01 feet	±0.5 feet (parallel to alignment) ±0.1 feet (normal to alignment)
Roadway paving pins for surfacing or paving	±0.01 feet	±0.2 feet (parallel to alignment) ±0.1 feet (normal to alignment)

The Contracting Agency may spot-check the Contractor's surveying. These spot checks will not change the requirements for normal checking by the Contractor.

When staking Roadway alignment and stationing, the Contractor shall perform independent checks from different secondary control to ensure that the points staked are within the specified survey accuracy tolerances.

The Contractor shall calculate coordinates for the alignment. The Contracting Agency will verify these coordinates prior to issuing approval to the Contractor for commencing with the Work. The Contracting Agency will require up to seven (7) calendar days from the date the data is received.

Contract Work to be performed using Contractor-provided stakes shall not begin until the stakes are approved by the Contracting Agency. Such approval shall not relieve the Contractor of responsibility for the accuracy of the stakes.

Provided to Builders Exchange of WA, Inc. For usage Conditions Agreement see www.bxwa.com - Always Verify Scale

Stakes shall be marked in accordance with WSDOT Standard Plan A-10.10-00. When stakes are needed that are not described in the Plans, then those stakes shall be marked, at no additional cost to the Contracting Agency as ordered by the Engineer.

1-05.4(2) Bridge and Structure Surveys

NEW Section:

(July 23, 2015 APWA GSP, Option 2)

For all structural Work such as bridges and retaining walls, the Contractor shall retain as a part of Contractor's organization an experienced team of surveyors.

The Contractor shall provide all surveys required to complete the Structure, except the following primary survey control which will be provided by the Engineer:

1. Centerline or offsets to centerline of the Structure.
2. Stations of abutments and pier centerlines.
3. A sufficient number of bench marks for levels to enable the Contractor to set grades at reasonably short distances.
4. Monuments and control points as shown in the Plans.

The Contractor shall establish all secondary survey controls, both horizontal and vertical, as necessary to assure proper placement of all project elements based on the primary control points provided by the Engineer. Survey Work shall be within the following tolerances:

Stationing	± 0.01 foot
Alignment	± 0.01 foot (between successive points)
Superstructure Elevations	± 0.01 foot (from Plan elevations)
Substructure Elevations	± 0.05 foot (from Plan elevations)

During the progress of the Work, the Contractor shall make available to the Engineer all field books including survey information, footing elevations, cross sections and quantities.

The Contractor shall be fully responsible for the close coordination of field locations and measurements with appropriate dimensions of structural members being fabricated.

1-05.4(3) Payment
(*April 2015 KENMORE GSP*)

NEW Section:

Provided to Builders Exchange of WA, Inc. For usage Conditions Agreement see www.bxwa.com - Always Verify Scale

Payment will be made in accordance with Section 1-04.1 of the Standard Specifications for the following Bid item when included in the Bid Proposal.

"Construction Surveying", lump sum.
The lump sum Contract price for "Construction Surveying" shall be full pay for all labor, equipment, materials, and supervision to perform the Work specified, including any resurveying, checking, correction of errors, replacement of missing or damaged stakes, and coordination efforts. (Twenty-five percent of the total cost in the Bid item for "Construction Surveying" will be applied to the Record Drawings and will be paid upon submittal and acceptance of the Record Drawings.)

1-05.7 Removal of Defective and Unauthorized Work

(October 1, 2005 APWA GSP)

SUPPLEMENT this Section with the following:

If the Contractor fails to remedy defective or unauthorized Work within the time specified in a written notice from the Engineer, or fails to perform any part of the Work required by the Contract Documents, the Engineer may correct and remedy such Work as may be identified in the written notice, with Contracting Agency forces or by such other means as the Contracting Agency may deem necessary.

If the Contractor fails to comply with a written order to remedy what the Engineer determines to be an emergency situation, the Engineer may have the defective and unauthorized Work corrected immediately, have the rejected Work removed and replaced, or have Work the Contractor refuses to perform completed by using Contracting Agency or other forces. An emergency situation is any situation when, in the opinion of the Engineer, a delay in its remedy could be potentially unsafe, or might cause serious risk of loss or damage to the public.

Direct or indirect costs incurred by the Contracting Agency attributable to correcting and remedying defective or unauthorized Work, or Work the Contractor failed or refused to perform, shall be paid by the Contractor. Payment will be deducted by the Engineer from monies due, or to become due, the Contractor. Such direct and indirect costs shall include in particular, but without limitation, compensation for additional professional services required, and costs for repair and replacement of Work of others destroyed or damaged by correction, removal, or replacement of the Contractor's unauthorized Work.

No adjustment in Contract time or compensation will be allowed because of the delay in the performance of the Work attributable to the exercise of the Contracting Agency's rights provided by this Section.

Provided to Builders Exchange of WA, Inc. For usage Conditions Agreement see www.bxwa.com - Always Verify Scale

The rights exercised under the provisions of this Section shall not diminish the Contracting Agency's right to pursue any other avenue for additional remedy or damages with respect to the Contractor's failure to perform the Work as required.

1-05.11 Final Inspection

DELETE this Section and REPLACE it with the following:

1-05.11 Final Inspections and Operational Testing

(October 1, 2005 APWA GSP)

1-05.11(1) Substantial Completion Date

When the Contractor considers the Work to be substantially complete, the Contractor shall so notify the Engineer and request the Engineer establish the Substantial Completion Date. The Contractor's request shall list the specific items of Work that remain to be completed in order to reach physical completion. The Engineer will schedule an inspection of the Work with the Contractor to determine the status of completion. The Engineer may also establish the Substantial Completion Date unilaterally.

If, after this inspection, the Engineer concurs with the Contractor that the Work is substantially complete and ready for its intended use, the Engineer, by written notice to the Contractor, will set the Substantial Completion Date. If, after this inspection the Engineer does not consider the Work substantially complete and ready for its intended use, the Engineer will, by written notice, so notify the Contractor giving the reasons therefor.

Upon receipt of written notice concurring in or denying substantial completion, whichever is applicable, the Contractor shall pursue vigorously, diligently and without unauthorized interruption, the Work necessary to reach substantial and physical completion. The Contractor shall provide the Engineer with a revised schedule indicating when the Contractor expects to reach substantial and physical completion of the Work.

The above process shall be repeated until the Engineer establishes the Substantial Completion Date and the Contractor considers the Work physically complete and ready for final inspection.

1-05.11(2) Final Inspection and Physical Completion Date

When the Contractor considers the Work physically complete and ready for final inspection, the Contractor by written notice, shall request the Engineer to schedule a final inspection. The Engineer will set a date for final inspection. The Engineer and

Provided to Builders Exchange of WA, Inc. For usage Conditions Agreement see www.bxwa.com - Always Verify Scale

the Contractor will then make a final inspection and the Engineer will notify the Contractor in writing of all particulars in which the final inspection reveals the Work incomplete or unacceptable. The Contractor shall immediately take such corrective measures as are necessary to remedy the listed deficiencies. Corrective Work shall be pursued vigorously, diligently, and without interruption until physical completion of the listed deficiencies. This process will continue until the Engineer is satisfied the listed deficiencies have been corrected.

If action to correct the listed deficiencies is not initiated within 7 days after receipt of the written notice listing the deficiencies, the Engineer may, upon written notice to the Contractor, take whatever steps are necessary to correct those deficiencies pursuant to Section 1-05.7.

The Contractor will not be allowed an extension of Contract time because of a delay in the performance of the Work attributable to the exercise of the Engineer's right hereunder.

Upon correction of all deficiencies, the Engineer will notify the Contractor and the Contracting Agency, in writing, of the date upon which the Work was considered physically complete. That date shall constitute the Physical Completion Date of the Contract, but shall not imply acceptance of the Work or that all the obligations of the Contractor under the Contract have been fulfilled.

1-05.11(3) Operational Testing

It is the intent of the Contracting Agency to have at the Physical Completion Date a complete and operable system. Therefore when the Work involves the installation of machinery or other mechanical equipment; street lighting, electrical distribution or signal systems; irrigation systems; buildings; or other similar Work it may be desirable for the Engineer to have the Contractor operate and test the Work for a period of time after final inspection but prior to the Physical Completion Date. Whenever items of Work are listed in the Contract Provisions for operational testing they shall be fully tested under operating conditions for the time period specified to ensure their acceptability prior to the Physical Completion Date. During and following the test period, the Contractor shall correct any items of workmanship, materials, or equipment which prove faulty, or that are not in first class operating condition. Equipment, electrical controls, meters, or other devices and equipment to be tested during this period shall be tested under the observation of the Engineer, so that the Engineer may determine their suitability for the purpose for which they were installed. The Physical Completion Date cannot be established until testing and corrections have been completed to the satisfaction of the Engineer.

The costs for power, gas, labor, material, supplies, and everything else needed to successfully complete operational testing, shall be included in the unit Contract

Provided to Builders Exchange of WA, Inc. For usage Conditions Agreement see www.bxwa.com - Always Verify Scale

prices related to the system being tested, unless specifically set forth otherwise in the Proposal.

Operational and test periods, when required by the Engineer, shall not affect a manufacturer's guaranties or warranties furnished under the terms of the Contract.

1-05.11(4) Punch List Completion
(*April 2015 KENMORE GSP*)

NEW Section:

Upon establishment of the Substantial Completion Date, the Contracting Agency shall compile and issue a punch list. The Contracting Agency reserves the right to add items to the punch list at any time as appropriate to meet the requirements of the Plans and Specifications. The Contractor shall proceed with completing all the Work on the punch list (and subsequent revisions, if any) and reaching Physical Completion within the allowed Contract time.

1-05.13 Superintendents, Labor And Equipment Of Contractor
(*August 14, 2013 APWA GSP*)

DELETE the sixth and seventh paragraphs of this Section.

1-05.15 Method of Serving Notices
(March 25, 2009 APWA GSP)

REVISE the second paragraph to read:

All correspondence from the Contractor shall be directed to the Project Engineer. <u>All correspondence from the Contractor constituting any notification, notice of protest, notice of dispute, or other correspondence constituting notification required to be furnished under the Contract, must be in paper format, hand delivered or sent via mail delivery service to the Project Engineer's office. Electronic copies such as e-mails or electronically delivered copies of correspondence will not constitute such notice and will not comply with the requirements of the Contract.</u>

1-05.15(1) Forms
(April 2015 KENMORE GSP)

NEW Section:

Unless otherwise approved by the Engineer, the Contractor shall use the forms provided in the Appendices for all correspondences and notifications. If no form is

Provided to Builders Exchange of WA, Inc. For usage Conditions Agreement see www.bxwa.com - Always Verify Scale

provided for a specific type of correspondence or notification, the Contractor shall provide all information as needed to provide a timely response.

NEW Section:

1-05.16 Water and Power

(October 1, 2005 APWA GSP)

The Contractor shall make necessary arrangements, and shall bear the costs for power and water necessary for the performance of the work, unless the contract includes power and water as a pay item.

(April 2015 KENMORE GSP)

The Contractor shall use only those hydrants designated by the agency in charge of water distribution and in strict accordance with its requirements for hydrant use. All costs associated with hydrant water usage including usage fees shall be at the Contractor's expense.

1-05.18 Record Drawings

(April 2015 KENMORE GSP)

NEW Section:

The Contractor shall maintain one set of full size Plans for Record Drawings, updated with clear and accurate red-lined field revisions on a daily basis, and within two (2) business days after receipt of information that a change in Work has occurred. The Contractor shall not conceal any Work until the required information is recorded.

This Record Drawing set shall be used for this purpose alone, shall be kept separate from other Plan sheets, and shall be clearly marked as Record Drawings. These Record Drawings shall be kept on-site at the Contractor's field office, and shall be available for review by the Contracting Agency at all times. The Contractor shall bring the Record Drawings to each progress meeting for review.

The preparation and upkeep of the Record Drawings is to be the assigned responsibility of a single, experienced, and qualified individual. The quality of the Record Drawings, in terms of accuracy, clarity, and completeness, is to be adequate to allow the Contracting Agency to modify the computer-aided drafting (CAD) Contract Drawings to produce a complete set of Record Drawings for the Contracting Agency without further investigative effort by the Contracting Agency.

The Record Drawing markups shall document all changes in the Work, both concealed and visible. Items that must be shown on the markups include but are not limited to:

Provided to Builders Exchange of WA, Inc. For usage Conditions Agreement see www.bxwa.com - Always Verify Scale

- Actual dimensions, arrangement, and materials used when different than shown in the Plans.
- Changes made by Change Order or Field Order.
- Changes made by the Contractor.
- Accurate locations of storm sewer, sanitary sewer, water mains and other water appurtenances, Structures, conduits, light standards, vaults, width of Roadways, sidewalks, landscaping areas, building footprints, channelization and pavement markings, etc. Include pipe invert elevations, top of castings (manholes, inlets, etc.).

If the Contract calls for the Contracting Agency to do all surveying and staking, the Contracting Agency will provide the elevations at the tolerances the Contracting Agency requires for the Record Drawings.

When the Contract calls for the Contractor to do the surveying/staking, the applicable tolerance limits include, but are not limited to the following:

	Vertical	Horizontal
As-built sanitary & storm invert and grate elevations	± 0.01 foot	± 0.01 foot
As-built monumentation	± 0.001 foot	± 0.001 foot
As-built waterlines, inverts, valves, hydrants	± 0.10 foot	± 0.10 foot
As-built ponds/swales/water features	± 0.10 foot	± 0.10 foot
As-built buildings (fin. Floor elev.)	± 0.01 foot	± 0.10 foot
As-built gas lines, power, TV, Tel, Com	± 0.10 foot	± 0.10 foot
As-built signs, signals, etc.	N/A	± 0.10 foot

Making Entries on the Record Drawings:

- Use erasable colored pencil (not ink) for all markings on the Record Drawings, conforming to the following color code:
- Additions - Red
- Deletions - Green
- Comments - Blue

Provided to Builders Exchange of WA, Inc. For usage Conditions Agreement see www.bxwa.com - Always Verify Scale

- Dimensions - Graphite
- Provide the applicable reference for all entries, such as the change order number, the request for information (RFI) number, or the approved Shop Drawing number.
- Date all entries.
- Clearly identify all items in the entry with notes similar to those in the Contract Drawings (such as pipe symbols, centerline elevations, materials, pipe joint abbreviations, etc.).

The Contractor shall certify on the Record Drawings that said Drawings are an accurate depiction of built conditions, and in conformance with the requirements detailed above. The Contractor shall submit final Record Drawings to the Contracting Agency. Contracting Agency acceptance of the Record Drawings is one of the requirements for achieving Physical Completion.

Payment for Work identified in this Section will be made in accordance with Special Provisions Section 1-05.4(3).

1-05.19 Contractor's Daily Diary

(*April 2015 KENMORE GSP*)

NEW Section:

The Contractor and Subcontractors shall maintain and provide to the Engineer upon request a Daily Diary Record of the Work. The Diary shall be created by pen entries in a hard-bound diary book. The Diary must contain the Project and Number; if the Diary is in loose-leaf form, this information must appear on every page. The Diary must be kept and maintained by the Contractor's designated project superintendent(s). Entries must be made on a daily basis and must accurately represent all of the project activities on each day.

At a minimum, the Diary shall show on a daily basis:

1. The day and date.
2. The weather conditions, including changes throughout the day.
3. A complete description of Work accomplished during the day with adequate references to the Plans and Contract Provisions so that the reader can easily and accurately identify said Work in the Plans. Identify location/description of photographs or videos taken that day.
4. An entry for each and every changed condition, dispute or potential dispute, incident, accident, or occurrence of any nature whatsoever which might affect the Contractor, Contracting Agency, or any third party in any manner.
5. Listing of any materials received and stored on- or off-site by the Contractor for future installation, to include the manner of storage and protection of the same.

Provided to Builders Exchange of WA, Inc. For usage Conditions Agreement see www.bxwa.com - Always Verify Scale

6. Listing of materials installed during each day.
7. List of all Subcontractors working on-site during each day.
8. Listing of the number of Contractor's employees working during each day by category of employment.
9. Listing of Contractor's equipment working on the site during each day. Idle equipment on the site shall be listed and designated as idle.
10. Notations to explain inspections, testing, stake-out, and all other services furnished by the Contracting Agency or other party during each day.
11. Entries to verify the daily (including non-Work days) inspection and maintenance of traffic control devices and condition of the traveled Roadway surfaces. The Contractor shall not allow any conditions to develop that would be hazardous to the public.
12. Any other information that serves to give an accurate and complete record of the nature, quantity, and quality of the Contractor's progress on each day.
13. Plan markups showing locations and dimensions of constructed features to be used by the Engineer to produce Record Drawings.
14. All pages of the Diary must be numbered consecutively with no omissions in page numbers, signed and dated by the Contractor's official project representative.

The Contractor may use additional sheets separate from the Diary if necessary to provide a complete Diary record, but they must be signed, dated, and labeled with Project name and Number.

It is expressly agreed between the Contractor and Contracting Agency that the Daily Diary maintained by the Contractor shall be the "Contractor's Book of Original Entry" for the documentation of any potential claims or disputes that might arise during this Contract. If the Contactor fails to maintain a Diary as required, the Contracting Agency's daily inspection reports shall act as the sole record of project activities.

All costs associated with preparing and maintaining the Contractor's Daily Diary shall be included in the cost for the various Bid items; no separate Bid item is provided for this Work.

1-05.20 Stockpiling of Materials and Construction Office

(April 2015 KENMORE GSP)

NEW Section:

This Contract *** does not *** provide for an on-site location for the Contractor to stockpile materials and/or a construction office (staging). If the Contractor requires staging on private property, it shall be the Contractor's responsibility to secure all private property rights for staging at the Contractor's expense. If approved by the Contracting Agency, City Right of Way may be utilized for location of staging. The

Provided to Builders Exchange of WA, Inc. For usage Conditions Agreement see www.bxwa.com - Always Verify Scale

Contractor shall propose location, methods of securing the site, and site restoration to the Contracting Agency for consideration. Selected City Right of Way locations shall not impede traffic at any time. The Contractor may utilize the construction Work zone within the City's Right of Way for staging as long as such staging does not impede the normal flow of traffic outside that caused by construction activity associated with the Work.

1-06 CONTROL OF MATERIAL

SUPPLEMENT this Section with the following:

Buy America

(August 6, 2012 WSDOT GSP)

In accordance with Buy America requirements contained in 23 CFR 635.410, the major quantities of steel and iron construction material that is permanently incorporated into the project shall consist of American-made materials only. Buy America does not apply to temporary steel items, e.g., temporary sheet piling, temporary bridges, steel scaffolding and falsework.

Minor amounts of foreign steel and iron may be utilized in this project provided the cost of the foreign material used does not exceed one-tenth of one percent of the total Contract cost or $2,500.00, whichever is greater.

American-made material is defined as material having all manufacturing processes occurring domestically. To further define the coverage, a domestic product is a manufactured steel material that was produced in one of the 50 States, the District of Columbia, Puerto Rico, or in the territories and possessions of the United States.

If domestically produced steel billets or iron ingots are exported outside of the area of coverage, as defined above, for any manufacturing process then the resulting product does not conform to the Buy America requirements. Additionally, products manufactured domestically from foreign source steel billets or iron ingots do not conform to the Buy America requirements because the initial melting and mixing of alloys to create the material occurred in a foreign country.

Manufacturing begins with the initial melting and mixing, and continues through the coating stage. Any process which modifies the chemical content, the physical size or shape, or the final finish is considered a manufacturing process. The processes include rolling, extruding, machining, bending, grinding, drilling, welding, and coating. The action of applying a coating to steel or iron is deemed a manufacturing process. Coating includes epoxy coating, galvanizing, aluminizing, painting, and any other coating that protects or enhances the value of steel or iron. Any process from the original reduction from ore to the finished product constitutes a manufacturing process for iron.

Provided to Builders Exchange of WA, Inc. For usage Conditions Agreement see www.bxwa.com - Always Verify Scale

Due to a nationwide waiver, Buy America does not apply to raw materials (iron ore and alloys), scrap (recycled steel or iron), and pig iron or processed, pelletized, and reduced iron ore.

The following are considered to be steel manufacturing processes:

1. Production of steel by any of the following processes:
    a. Open hearth furnace.
    b. Basic oxygen.
    c. Electric furnace.
    d. Direct reduction.
2. Rolling, heat treating, and any other similar processing.
3. Fabrication of the products.
    a. Spinning wire into cable or strand.
    b. Corrugating and rolling into culverts.
    c. Shop fabrication.

A certification of materials origin will be required for any items comprised of, or containing, steel or iron construction materials prior to such items being incorporated into the permanent Work. The certification shall be on DOT Form 350-109EF provided by the Engineer, or such other form the Contractor chooses, provided it contains the same information as DOT Form 350-109EF.

1-06.1 Approval of Materials Prior to Use

1-06.1(5) Materials and Equipment Furnished by Owner

(*April 2015 KENMORE GSP*)

NEW Section:

The Contractor shall receive, inspect, and accept all Owner-furnished items of material and equipment, subject only to latent defects. Claim by Contractor to Owner regarding defects shall be made in writing within 5 days after delivery of items after which time, the materials and equipment shall become the property of the Contractor until final acceptance from the Contracting Agency.

Provided to Builders Exchange of WA, Inc. For usage Conditions Agreement see www.bxwa.com - Always Verify Scale

1-06.6 Recycled Materials

(January 4, 2016 APWA GSP)

DELETE this Section, including its subsections, and REPLACE it with the following:

The Contractor shall make their best effort to utilize recycled materials in the construction of the project. Approval of such material use shall be as detailed elsewhere in the Standard Specifications.

Prior to Physical Completion the Contractor shall report the quantity of recycled materials that were utilized in the construction of the project for each of the items listed in Section 9-03.21. The report shall include hot mix asphalt, recycled concrete aggregate, recycled glass, steel furnace slag and other recycled materials (e.g. utilization of on-site material and aggregates from concrete returned to the supplier). The Contractor's report shall be provided on DOT form 350-075 Recycled Materials Reporting.

1-07 LEGAL RELATIONS AND RESPONSIBILITIES TO THE PUBLIC

1-07.1 Laws to be Observed

(October 1, 2005 APWA GSP)

SUPPLEMENT this Section with the following:

In cases of conflict between different safety regulations, the more stringent regulation shall apply.

The Washington State Department of Labor and Industries shall be the sole and paramount administrative agency responsible for the administration of the provisions of the Washington Industrial Safety and Health Act of 1973 (WISHA).

The Contractor shall maintain at the project site office, or other well known place at the project site, all articles necessary for providing first aid to the injured. The Contractor shall establish, publish, and make known to all employees, procedures for ensuring immediate removal to a hospital, or doctor's care, persons, including employees, who may have been injured on the project site. Employees should not be permitted to Work on the project site before the Contractor has established and made known procedures for removal of injured persons to a hospital or a doctor's care.

The Contractor shall have sole responsibility for the safety, efficiency, and adequacy of the Contractor's plant, appliances, and methods, and for any damage or injury resulting from their failure, or improper maintenance, use, or operation. The Contractor shall be solely and completely responsible for the conditions of the project

Provided to Builders Exchange of WA, Inc. For usage Conditions Agreement see www.bxwa.com - Always Verify Scale

site, including safety for all persons and property in the performance of the Work. This requirement shall apply continuously, and not be limited to normal working hours. The required or implied duty of the Engineer to conduct construction review of the Contractor's performance does not, and shall not, be intended to include review and adequacy of the Contractor's safety measures in, on, or near the project site.

1-07.2 State Taxes

DELETE this Section, including its sub-sections, in its entirety and REPLACE it with the following:

1-07.2 State Sales Tax

(June 27, 2011 APWA GSP)

The Washington State Department of Revenue has issued special rules on the State sales tax. Sections 1-07.2(1) through 1-07.2(3) are meant to clarify those rules. The Contractor should contact the Washington State Department of Revenue for answers to questions in this area. The Contracting Agency will not adjust its payment if the Contractor bases a Bid on a misunderstood tax liability.

The Contractor shall include all Contractor-paid taxes in the unit Bid prices or other Contract amounts. In some cases, however, State retail sales tax will not be included. Section 1-07.2(2) describes this exception.

The Contracting Agency will pay the retained percentage (or release the Contract Bond if a "FHWA funded" project) only if the Contractor has obtained from the Washington State Department of Revenue a certificate showing that all Contract-related taxes have been paid (RCW 60.28.051). The Contracting Agency may deduct from its payments to the Contractor any amount the Contractor may owe the Washington State Department of Revenue, whether the amount owed relates to this Contract or not. Any amount so deducted will be paid into the proper State fund.

1-07.2(1) State Sales Tax — Rule 171

WAC 458-20-171, and its related rules, apply to building, repairing, or improving streets, roads, etc., which are owned by a municipal corporation, or political subdivision of the State, or by the United States, and which are used primarily for foot or vehicular traffic. This includes storm or combined sewer systems within and included as a part of the street or road drainage system and power lines when such are part of the Roadway lighting system. For Work performed in such cases, the Contractor shall include Washington State Retail Sales Taxes in the various unit Bid item prices, or other Contract amounts, including those that the Contractor pays on the purchase of the materials, equipment, or supplies used or consumed in doing the Work.

Provided to Builders Exchange of WA, Inc. For usage Conditions Agreement see www.bxwa.com - Always Verify Scale

1-07.2(2) State Sales Tax — Rule 170

WAC 458-20-170, and its related rules, apply to the constructing and repairing of new or existing buildings, or other Structures, upon real property. This includes, but is not limited to, the construction of streets, roads, Highways, etc., owned by the State of Washington; water mains and their appurtenances; sanitary sewers and sewage disposal systems unless such sewers and disposal systems are within, and a part of, a street or road drainage system; telephone, telegraph, electrical power distribution lines, or other conduits or lines in or above streets or roads, unless such power lines become a part of a street or Roadway lighting system; and installing or attaching of any article of tangible personal property in or to real property, whether or not such personal property becomes a part of the realty by virtue of installation.

For Work performed in such cases, the Contractor shall collect from the Contracting Agency, retail sales tax on the full Contract price. The Contracting Agency will automatically add this sales tax to each payment to the Contractor. For this reason, the Contractor shall not include the retail sales tax in the unit Bid item prices, or in any other Contract amount subject to Rule 170, with the following exception.

Exception: The Contracting Agency will not add in sales tax for a payment the Contractor or a Subcontractor makes on the purchase or rental of tools, machinery, equipment, or consumable supplies not integrated into the project. Such sales taxes shall be included in the unit Bid item prices or in any other Contract amount.

1-07.2(3) Services

The Contractor shall not collect retail sales tax from the Contracting Agency on any Contract wholly for professional or other services (as defined in Washington State Department of Revenue Rules 138 and 244).

1-07.6 Permits and Licenses

SUPPLEMENT this Section with the following:

(April 2015 KENMORE GSP)

The Contractor shall obtain a Right-of-Way use permit at Kenmore City Hall at no charge to the Contractor.

(April 2015 KENMORE GSP)

Department of Ecology

A Construction Stormwater Permit is not required for this project.

(April 2015 KENMORE GSP)

Provided to Builders Exchange of WA, Inc. For usage Conditions Agreement see www.bxwa.com - Always Verify Scale

No hydraulic permits are required for this project unless the Contractor's operations use, divert, obstruct, or change the natural flow or bed of any river or stream (including any area beneath the ordinary high water mark), or utilize any of the waters of the State or materials from gravel or sand bars, or from stream beds. It is not anticipated that any Contractor operations will impact any river or stream.

1-07.9 Wages

1-07.9(1) General

SUPPLEMENT this Section with the following:

(January 8, 2016 WSDOT GSP)

The Federal wage rates incorporated in this Contract have been established by the Secretary of Labor under United States Department of Labor General Decision No. WA160001.

The State rates incorporated in this Contract are applicable to all construction activities associated with this Contract.

1-07.9(5) Required Documents

(April 2015 KENMORE GSP)

SUPPLEMENT this Section with the following:

Certified Payrolls shall be submitted on WA State Department of Labor and Industry form F700-065-000. Forms may be located at the WA L&I website: http://www.lni.wa.gov/Forms. See the appendix for instructions on filling out the form.

1-07.12 Federal Agency Inspection

(******)

SUPPLEMENT this Section with the following:

This Contract is not a FHWA Federally funded project. This project is financed through the King County Consortium Community Development Block Grant Program with funds obtained from the U.S. Department of Housing and Urban Development. The contract will be subject to regulations of the Departments of Labor and Housing and Urban Development.

Attention is called to Federal provisions for Equal Employment Opportunity, HUD Section 3 requirements, and the minimum wages as set forth in the Contract Documents.

1-07.13 Contractor's Responsibility for Work

Provided to Builders Exchange of WA, Inc. For usage Conditions Agreement see www.bxwa.com - Always Verify Scale

1-07.13(1) General

(*April 2015 KENMORE GSP*)

SUPPLEMENT this Section with the following:

The Contractor shall, at all times, enforce strict discipline and good order among their employees and shall not employ any person unfit or not skilled in the Work assigned to him or her. Employees or Subcontractors of the Contractor who, in the opinion of Engineer, may impair the quality of the construction shall immediately be discharged from the job site by the Contractor upon the written request of the Engineer.

1-07.13(2) Relief of Responsibility for Completed Work

(*April 2015 KENMORE GSP*)

REVISE paragraph 2 to read:

Unless approved otherwise by the Contracting Agency, the Contractor shall bear the risk of loss or damage for all finished or partially finished Work until Physical Completion of the entire Contract.

1-07.13(4) Repair of Damage

REVISE this Section to read:

(*August 6, 2001 WSDOT GSP*)

The Contractor shall promptly repair all damage to either temporary or permanent Work as directed by the Engineer. For damage qualifying for relief under Sections 1-07.13(1), 1-07.13(2) or 1-07.13(3), payment will be made in accordance with Section 1-04.4. Payment will be limited to repair of damaged Work only. No payment will be made for delay or disruption of Work.

1-07.15 Temporary Water Pollution/Erosion Control

1-07.15(1) Spill Prevention, Control, and Countermeasures Plan

(April 2015 KENMORE GSP)

SUPPLEMENT this Section with the following:

11. Site Log Book
    The Contractor shall keep a daily record identifying BMPs in place, changes to BMPs, and any spill that occurs and procedures used to mitigate.

1-07.16 Protection and Restoration of Property

Provided to Builders Exchange of WA, Inc. For usage Conditions Agreement see www.bxwa.com - Always Verify Scale

1-07.16(1) Private/Public Property

(*April 2015 KENMORE GSP*)

SUPPLEMENT this Section with the following:

The Contractor's Work shall be confined to the Contracting Agency's premises, including easements, rights of entry and construction permit limits. The Contractor shall not enter upon or place materials on other property except by written consent of the individual owners and shall hold the Contracting Agency harmless from all suits and actions of every kind and description that might result from the Contractor's use of property. The Contractor shall furnish, to the Contracting Agency, the written consent from the property owner(s) to use the property and a written release from the property owner(s) upon vacation of said property.

The Contractor shall provide and maintain access to and from the Right of Way.

The Contractor shall comply with all conditions of the project easements. Easement documents are located in the Appendices. The Contractor shall indemnify the Contracting Agency from claims on all easements and rights of entry. All other access rights outside the limits identified in the Plans, will be the Contractor's responsibility to negotiate and obtain at the Contractor's expense.

The Contractor shall keep, as part of their Daily Diary, a record of the days temporary easements are used and Work done. Once Work is completed within temporary easements, the Contractor shall notify the Contracting Agency in writing. Failure to do so may result in monetary penalties against the Contracting Agency. Any penalties charged against the Contracting Agency due to the Contractor's failure to comply with these Specifications and easement requirements shall be charged against the Contractor's future payments.

The Contractor shall restore all property within the temporary easements or rights of entry to its original condition or as indicated in the Plans and Specifications.

1-07.16(1)A Protection and Restoration of Existing Markers and Monuments

(April 2015 KENMORE GSP)

NEW Section:

The Contractor shall protect existing survey monuments and property corner markers. The Contractor shall reference by survey ties and replace existing markers and/or monuments, at the Contractor's own expense, by a Professional Land Surveyor registered in the State of Washington, which must be removed for construction purposes. The Contractor shall notify the Contracting Agency of any conflicts between the Work and property corner markers not identified for removal or resetting prior to

Provided to Builders Exchange of WA, Inc. For usage Conditions Agreement see www.bxwa.com - Always Verify Scale

commencing the Work. Resetting of property corners for which there is no Record of Survey or Short Plat filed with the County Auditor may require exhaustive and expensive resurvey. All costs associated with markers and monuments shall be included in the Bid item "Construction Surveying".

1-07.16(1)B Maintenance of Project Site and Public Facilities
(*April 2015 KENMORE GSP*)

NEW Section:

The Contractor shall clean up on a daily basis all refuse, rubbish, scrap material and debris caused by the Contractor's operations.

The Contractor shall clean and sweep streets, sidewalks, and any pedestrian walkways affected by construction operations at the end of each working day, and throughout the working day as deemed necessary by the Engineer to provide for safe public use.

The Contractor shall maintain the project site in a manner that is safe for public use, neat and orderly in appearance. In the event the Contractor fails to conform to these requirements, the Contracting Agency shall have the right to have the Work done by others and the cost shall be deducted from moneys due to the Contractor.

1-07.16(1)C Garbage Service
(*April 2015 KENMORE GSP*)

NEW Section:

The Contractor shall be responsible for and coordinating with the respective agency for garbage pick-up. Services shall not be interrupted. If necessary, the Contractor shall be responsible for moving private garbage cans to and from any temporary pick up location. Below is contact information for garbage service:

Republic Services Web: http://www.republicservices.com/ Tele: 425-646-2492

1-07.16(2) Vegetation Protection and Restoration
SUPPLEMENT this Section with the following:

(*August 2, 2010 WSDOT GSP*)

Vegetation and soil protection zones for trees shall extend out from the trunk to a distance of 1 foot radius for each inch of trunk diameter at breast height.

Provided to Builders Exchange of WA, Inc. For usage Conditions Agreement see www.bxwa.com - Always Verify Scale

Vegetation and soil protection zones for shrubs shall extend out from the stems at ground level to twice the radius of the shrub.

Vegetation and soil protection zones for herbaceous vegetation shall extend to encompass the diameter of the plant as measured from the outer edge of the plant.

1-07.16(3) Fences, Mailboxes, Incidentals
(*April 2015 KENMORE GSP*)

SUPPLEMENT this Section with the following:

The Contractor is hereby advised that the location of fences, mail and paper boxes, trees, landscaping and other objects, if shown in the Plans, is provided solely to provide warning of the probable location of said objects and may not be precise or complete. Protection and restoration shall be performed in accordance with the Plans and Section 1-07.16 of the Standard Specifications. The Contractor shall verify exact locations before proceeding with Work. The Contractor shall be responsible for any damage done to public or private property as a direct result of the Contractor's activities.

The Contractor shall be responsible for and coordinating with the respective agency for mail delivery. Services shall not be interrupted. The Contractor shall coordinate any temporary mail box or other delivery locations with the United State Postal Service or applicable agency prior to relocation. Unless stated otherwise elsewhere, the cost for coordination and moving mailboxes shall be included in the various Bid items. Below is contact information for the agency:

US Post Office Attn: Post Master Tele: ***425-482-9755***

1-07.17 Utilities and Similar Facilities
(April 2015 KENMORE GSP)

SUPPLEMENT this Section with the following:

Unless otherwise noted on the Plans, locations and dimensions shown in the Plans are for existing facilities in accordance with available information obtained without uncovering, measuring, or other verification. Other aboveground or underground facilities not shown on the Plans may be encountered during the course of the work.

The Contractor is warned that there may be utilities on the project that are not part of the One Number Locator Service system. The Contractor must contact the utilities that are not part of the One Call system for locations.

Provided to Builders Exchange of WA, Inc. For usage Conditions Agreement see www.bxwa.com - Always Verify Scale

Utility Coordination

References in the Contract Documents which require the Contractor to coordinate with utility owners or their Contractors will be defined to include the duties, responsibilities and obligations as set forth below. The Contractor shall have the primary responsibility for planning, scheduling, coordinating, expediting and minimizing potential conflicts over Work space or Work time for all construction activities to be performed by the Contractor, its Subcontractors and vendors and by utility owners and their Contractors, to the extent utility construction or installation Work by the utility owners or their Contractors will be performed within the Contractor's Work areas or otherwise in any manner which may affect or impact the Contractor's performance.

As part of its coordination responsibility, the Contractor shall determine and incorporate into its construction plans and schedules all Contracting Agency rights, and obligations in any applicable utility franchise, easement or Right-of-Way use agreements, as well as any utility relocation agreements which the Contracting Agency has entered into with any utility regarding this project. See Appendix D for utility agreements.

The Contractor is responsible to promptly advise the Contracting Agency in the event any activity of a utility owner or its Contractor may cause a delay that impacts Critical Path Work. The Contractor shall immediately notify the Contracting Agency of any delays so that the Contracting Agency may take remedial measures available under its agreement with the utility owners to minimize any potential delay to the Contract.

The Contractor's failure to comply with these utility coordination obligations shall result in a complete waiver of any equitable adjustment to Contract price or schedule, to the extent caused by the Contractor's non-compliance with these coordination obligations under the Contract Documents.

Utility Preconstruction Meeting

The Contractor shall attend a mandatory Utility Preconstruction Meeting with the Engineer, all affected Subcontractors, and all utility owners and their Contractors prior to beginning on-site Work.

The following addresses and telephone numbers of utility companies that have facilities within the project limits or will be adjusting, relocating, replacing or constructing utilities within the project limits are supplied for the Contractor's use:

Power
Puget Sound Energy
Contact: Project Manager: Josh Grenner
Telephone: (425) 457-4542

Provided to Builders Exchange of WA, Inc. For usage Conditions Agreement see www.bxwa.com - Always Verify Scale

Joshua.Grenner@pse.com

Telephone, Television & Fiber Optics
Comcast
1525 75th St. SW #200
Everett, WA 98203
Contact: Jill Look
Telephone: (425) 263-5346 Office; (206) 396-6032 Cell
Jill_Look@cable.comcast.com

Frontier Communications
1800 41st St.
Everett, WA 98201
Contact: David Collins
Telephone: (425) 577-1249
David.a.collins@ftr.com

Water
Northshore Utility District
6830 NE 185th ST
Kenmore, WA 98028
Contact: Stephen Dennehy
Telephone: (425) 398-4405
sdennehy@nud.net

Sanitary Sewer
Northshore Utility District
6830 NE 185th ST
Kenmore, WA 98028
Contact: Stephen Dennehy
Telephone: (425) 398-4405
sdennehy@nud.net

1-07.17(1) Utility Construction, Removal, or Relocation by the Contractor

SUPPLEMENT this Section with the following:

Wherever in the course of the construction operation it becomes necessary to cause an outage of utilities, it shall be Contractor's responsibility to notify the affected users and Engineer in writing not less than two (2) weeks in advance of the creation of such outage. The Contractor shall make reasonable effort to minimize the duration of outages, and shall estimate the length of time service will be interrupted and so notify the users. In the case of any utility outage that has exceeded or will exceed four hours, user contact shall again be made.

Provided to Builders Exchange of WA, Inc. For usage Conditions Agreement see www.bxwa.com - Always Verify Scale

Temporary service, if needed, will be arranged for by Contractor. Payment for temporary services shall be included in the unit price of the other Bid items.

Utility Notification of Excavation by Contractor

Where the Work includes excavation and construction of utilities that cross existing utilities, the Contractor shall contact the Utility Company contacts listed in Section 1- 07.17 at least seven (7) business days prior to excavation. The Contractor shall be responsible for maintaining communication with utility contacts as schedules change

1-07.17(2) Utility Construction, Removal, or Relocation by Others

REVISE the first paragraph of this Section to read as follows:

Any authorized agent of the Contracting Agency or utility owner may enter the Right of Way or easements to repair, rearrange, alter, or connect their equipment. The Contractor shall cooperate with such effort and shall avoid creating delays or hindrances to those doing the Work. As needed, the Contractor shall arrange to coordinate Work schedules.

SUPPLEMENT this Section with the following:

Public and private utilities, or their Contractors, will furnish all Work necessary to adjust, relocate, replace, or construct their facilities unless otherwise provided for in the Plans or these Special Provisions. Such adjustment, relocation, replacement, or construction will be done during the prosecution of the Work for this project.

Aerial power and communication distribution lines will remain operational and on the existing poles until the complete underground distribution system is in place and operational. Upon completion by the Contractor of the underground raceway system, Puget Sound Energy shall have ninety (90) days or timeframe specified in the project agreement (see Appendix F), to install their underground facilities and make them operational. Upon completion of Puget Sound Energy Work Comcast, Frontier, shall have sixty (60) days or timeframe specified in the project agreement (see Appendix F), to install their underground facilities and make them operational. Removal of the existing poles by the owner of the pole cannot take place until these three utilities have completed the installation of the new wiring, energized the system and all service conversions have been made operational.

1-07.18 Public Liability and Property Damage Insurance

DELETE this Section in its entirety, and REPLACE it with the following:

(******)

Provided to Builders Exchange of WA, Inc. For usage Conditions Agreement see www.bxwa.com - Always Verify Scale

The insurance requirements for this project shall be in accordance with the Supplementary King County Contract Conditions, Item 17: INSURANCE REQUIREMENTS-GENERAL.

1-07.23 Public Convenience and Safety

1-07.23(1) Construction Under Traffic

(January 2, 2012 WSDOT GSP)

SUPPLEMENT this Section with the following:

Work Zone Clear Zone

The Work Zone Clear Zone (WZCZ) applies during working and nonworking hours. The WZCZ applies only to temporary Roadside objects introduced by the Contractor's operations and does not apply to preexisting conditions or permanent Work. Those Work operations that are actively in progress shall be in accordance with adopted and approved Traffic Control Plans, and other Contract requirements.

During nonworking hours equipment or materials shall not be within the WZCZ unless they are protected by permanent guardrail or temporary concrete barrier. The use of temporary concrete barrier shall be permitted only if the Engineer approves the installation and location.

During actual hours of Work, unless protected as described above, only materials absolutely necessary to construction shall be within the WZCZ and only construction vehicles absolutely necessary to construction shall be allowed within the WZCZ or allowed to stop or park on the Shoulder of the Roadway.

The Contractor's nonessential vehicles and employees private vehicles shall not be permitted to park within the WZCZ at any time unless protected as described above.

Deviation from the above requirements shall not occur unless the Contractor has requested the deviation in writing and the Engineer has provided written approval.

Minimum WZCZ distances are measured from the edge of Traveled Way and will be determined as follows:

Regulatory Posted Speed	Distance From Traveled Way (Feet)
35 mph or less	10 *
40 mph	15

Provided to Builders Exchange of WA, Inc. For usage Conditions Agreement see www.bxwa.com - Always Verify Scale

45 to 55 mph	20
60 mph or greater	30

* or 2-feet beyond the outside edge of sidewalk

Minimum Work Zone Clear Zone Distance

1-07.24 Rights of Way

(July 23, 2015 APWA GSP)

DELETE this Section and REPLACE it with the following:

Street Right of Way lines, limits of easements, and limits of construction permits are indicated in the Plans. The Contractor's construction activities shall be confined within these limits, unless arrangements for use of private property are made.

Generally, the Contracting Agency will have obtained, prior to Bid opening, all Rights of Way and easements, both permanent and temporary, necessary for carrying out the Work. Exceptions to this are noted in the Bid Documents or will be brought to the Contractor's attention by a duly issued Addendum.

Whenever any of the Work is accomplished on or through property other than public Right of Way, the Contractor shall meet and fulfill all covenants and stipulations of any easement agreement obtained by the Contracting Agency from the owner of the private property. Copies of the easement agreements may be included in the Contract Provisions or made available to the Contractor as soon as practical after they have been obtained by the Engineer.

Whenever easements or rights of entry have not been acquired prior to advertising, these areas are so noted in the Plans. The Contractor shall not proceed with any portion of the Work in areas where Right of Way, easements or rights of entry have not been acquired until the Engineer certifies to the Contractor that the Right of Way or easement is available or that the right of entry has been received. If the Contractor is delayed due to acts of omission on the part of the Contracting Agency in obtaining easements, rights of entry or Right of Way, the Contractor will be entitled to an extension of time. The Contractor agrees that such delay shall not be a breach of Contract.

Each property owner shall be given 48 hours notice prior to entry by the Contractor. This includes entry onto easements and private property where private improvements must be adjusted.

The Contractor shall be responsible for providing, without expense or liability to the Contracting Agency, any additional land and access thereto that the Contractor may desire for temporary construction facilities, storage of materials, or other Contractor

Provided to Builders Exchange of WA, Inc. For usage Conditions Agreement see www.bxwa.com - Always Verify Scale

needs. However, before using any private property, whether adjoining the Work or not, the Contractor shall file with the Engineer a written permission of the private property owner, and, upon vacating the premises, a written release from the property owner of each property disturbed or otherwise interfered with by reasons of construction pursued under this Contract. The statement shall be signed by the private property owner, or proper authority acting for the owner of the private property affected, stating that permission has been granted to use the property and all necessary permits have been obtained or, in the case of a release, that the restoration of the property has been satisfactorily accomplished. The statement shall include the parcel number, address, and date of signature. Written releases must be filed with the Engineer before the Completion Date will be established.

1-08 PROSECUTION AND PROGRESS

NEW Section:

1-08.0 Preliminary Matters

(May 25, 2006 APWA GSP)

NEW Section:

1-08.0(1) Preconstruction Conference

(******)

Prior to the Contractor beginning the Work, a preconstruction conference will be held between the Contractor, the Engineer, King County and such other interested parties as may be invited. Attendance on the part of the Contractor's bookkeeper/accountant is mandatory. The purpose of the preconstruction conference will be:

1. To review the initial progress schedule;
2. To establish a working understanding among the various parties associated or affected by the Work;
3. To establish and review procedures for progress payment, notifications, approvals, submittals, etc.;
4. To establish normal working hours for the Work;
5. To review safety standards and traffic control; and
6. To discuss such other related items as may be pertinent to the Work.
7. To review and discuss Federal labor compliance issues.

The Contractor shall prepare and submit at the preconstruction conference the following:

Provided to Builders Exchange of WA, Inc. For usage Conditions Agreement see www.bxwa.com - Always Verify Scale

1. A breakdown of all lump sum items;
2. A preliminary schedule of Working Drawing submittals; and
3. A list of material sources for approval if applicable.

NEW Section:

1-08.0(2) Hours of Work
(December 8, 2014 APWA GSP)

Except in the case of emergency or unless otherwise approved by the Engineer, the normal working hours for the Contract shall be any consecutive 8-hour period between 7:00 a.m. and 6:00 p.m. Monday through Friday, exclusive of a lunch break. If the Contractor desires different than the normal working hours stated above, the request must be submitted in writing prior to the Preconstruction Conference, subject to the provisions below. The working hours for the Contract shall be established at or prior to the Preconstruction Conference.

All working hours and days are also subject to local permit and ordinance conditions (such as noise ordinances).

If the Contractor wishes to deviate from the established working hours, the Contractor shall submit a written request to the Engineer for consideration. This request shall state what hours are being requested, and why. Requests shall be submitted for review no later than two (2) weeks prior to the day(s) the Contractor is requesting to change the hours.

If the Contracting Agency approves such a deviation, such approval may be subject to certain other conditions, which will be detailed in writing. For example:

1. On non-Federal aid projects, requiring the Contractor to reimburse the Contracting Agency for the costs in excess of straight-time costs for Contracting Agency representatives who worked during such times. (The Engineer may require designated representatives to be present during the Work. Representatives who may be deemed necessary by the Engineer include, but are not limited to: survey crews; personnel from the Contracting Agency's material testing lab; Inspectors; and other Contracting Agency employees or third party consultants when, in the opinion of the Engineer, such Work necessitates their presence.)
2. Considering the Work performed on Saturdays, Sundays, and holidays as working days with regard to the Contract time.
3. Considering multiple Work shifts as multiple working days with respect to Contract time even though the multiple shifts occur in a single 24-hour period.

Provided to Builders Exchange of WA, Inc. For usage Conditions Agreement see www.bxwa.com - Always Verify Scale

4. If a 4-10 Work schedule is requested and approved the non-working day for the week will be charged as a working day.
5. If Davis Bacon wage rates apply to this Contract, all requirements must be met and recorded properly on certified payroll.

NEW Section:

1-08.0(3) Preconstruction Submittals
(April 2015 KENMORE GSP)

Prior to the Contractor beginning the Work, the Contractor shall submit the following information to the Contracting Agency:

- Detailed Equipment List, including "Rental Rate Blue Book" hourly costs (both working and standby rates). The following shall be included within the list:
  - Equipment type
  - Manufacturer
  - Year manufactured
  - Gas or diesel
  - Model or capacity
  - Horsepower
  - Attachments
  - Owner
- Weighted wage rates for all employee classifications anticipated to be used on project
- Request to Subcontract Work forms (or, if applicable, during construction, 3 working days prior to Subcontractor Work starting)
- Temporary Erosion and Sediment Control Plan
- Surface Water Pollution Prevention Plan (SWPPP)
- Spill Prevention, Control, and, Countermeasure (SPCC) Plan

NEW Section:

1-08.0(4) Weekly Project Meetings
(******)

Weekly project meetings shall be held at or near the job site, and shall include the Contractor, Contracting Agency and King County CDBG staff, on a mutually agreed upon date time (to be decided during the Preconstruction Conference).

NEW Section:

1-08.0(5) Progress Schedules
(******)

Provided to Builders Exchange of WA, Inc. For usage Conditions Agreement see www.bxwa.com - Always Verify Scale

The Contractor shall submit revised progress schedules at all weekly project meetings.

1-08.1 Subcontracting

(April 2015 KENMORE GSP)

A Subcontractor or lower tier Subcontractor will not be permitted to perform any Work under the Contract until a Request to Subcontract Form (Form 605 – equivalent to Form 421-012) has been approved. The Contractor shall provide the Contracting Agency 3 working days to review and approve/reject all Request to Subcontract submittals.

The Contractor shall complete responsibility check on all Subcontractors proposed for the project. All supporting documentation for responsibility check shall be included with the Request to Subcontract form. The following verification is required to be submitted with the Request to Subcontract form:

Industrial Insurance (Employer Liability): https://secure.lni.wa.gov/verify/
State Contractor's License Status: https://secure.lni.wa.gov/verify/
Department of Revenue Account:
http://dor.wa.gov/content/doingbusiness/registermybusiness
Federal Debarment Listed: https://www.sam.gov/portal/public/SAM/#1
State Debarment Listed:
http://www.lni.wa.gov/TradesLicensing/PrevWage/AwardingAgencies/DebarredContractors.

1-08.3 Progress Schedule

1-08.3(2) Progress Schedule Types

1-08.3(2)A Type A Progress Schedule

(March 13, 2012 APWA GSP)

REVISE this Section to read:

The Contractor shall submit two (2) copies of a Type A Progress Schedule no later than at the preconstruction conference, or some other mutually agreed upon submittal time. The schedule may be a critical path method (CPM) schedule, bar chart, or other standard schedule format. Regardless of which format used, the schedule shall identify the critical path. The Engineer will evaluate the Type A Progress Schedule and approve or return the schedule for corrections within 15 calendar days of receiving the submittal.

1-08.3(3) Schedule Updates

(*April 2015 KENMORE GSP*)

Provided to Builders Exchange of WA, Inc. For usage Conditions Agreement see www.bxwa.com - Always Verify Scale

SUPPLEMENT this Section with the following:

If the critical path is impacted, the Contractor shall update the complete project schedule once per month and shall submit the updated schedule no later than the pay period cut-off date.

1-08.4 Prosecution of Work

DELETE this Section and REPLACE it with the following:

1-08.4 Notice to Proceed and Prosecution of Work

(July 23, 2015 APWA GSP)

Notice to Proceed will be given after the Contract has been executed and the Contract bond and evidence of insurance have been approved and filed by the Contracting Agency. The Contractor shall not commence with the Work until the Notice to Proceed has been given by the Engineer. The Contractor shall commence construction activities on the project site within ten days of the Notice to Proceed Date, unless otherwise approved in writing. The Contractor shall diligently pursue the Work to the Physical Completion Date within the time specified in the Contract. Voluntary shutdown or slowing of operations by the Contractor shall not relieve the Contractor of the responsibility to complete the Work within the time(s) specified in the Contract.

When shown in the Plans, the first order of Work shall be the installation of high visibility fencing to delineate all areas for protection or restoration, as described in the Contract. Installation of high visibility fencing adjacent to the Roadway shall occur after the placement of all necessary signs and traffic control devices in accordance with Section 1-10.1(2). Upon construction of the fencing, the Contractor shall request the Engineer to inspect the fence. No other Work shall be performed on the site until the Contracting Agency has accepted the installation of high visibility fencing, as described in the Contract.

(April 2015 KENMORE GSP)

SUPPLEMENT this Section with the following:

A Notice to Proceed will not be given until the Contractor has submitted a completed W-9 form and certificate of insurance, and after the Contract has been executed by the Contracting Agency and the Contractor, and where applicable, by any State or Federal agencies responsible for funding any portion of the project.

(******)

Provided to Builders Exchange of WA, Inc. For usage Conditions Agreement see www.bxwa.com - Always Verify Scale

Notice to Proceed will only be given upon a successful Preconstruction Conference meeting with the Contractor's bookkeeper/accountant in attendance, to review all of the Federal labor compliance requirements, as required in Section 1-08.0(1) of the Special Provisions.

1-08.5 Time for Completion

(August 14, 2013 APWA GSP, Option B)

REVISE the third and fourth paragraphs to read:

Contract time shall begin on the first working day following the Notice to Proceed date. If the Contractor starts Work on the project at an earlier date, then Contract time shall begin on the first working day when on-site Work begins.

Each working day shall be charged to the Contract as it occurs, until the Contract Work is Physically Complete. If Substantial Completion has been granted and all the authorized working days have been used, charging of working days will cease. Each week the Engineer will provide the Contractor a statement that shows the number of working days: (1) charged to the Contract the week before; (2) specified for the Physical Completion of the Contract; and (3) remaining for the Physical Completion of the Contract. The statement will also show the nonworking days and any partial or whole day the Engineer declares as unworkable. Within 10 calendar days after the date of each statement, the Contractor shall file a written protest of any alleged discrepancies in it. To be considered by the Engineer, the protest shall be in sufficient detail to enable the Engineer to ascertain the basis and amount of time disputed. By not filing such detailed protest in that period, the Contractor shall be deemed as having accepted the statement as correct. If the Contractor is approved to Work 10 hours a day and 4 days a week (a 4-10 schedule) and the fifth day of the week in which a 4-10 shift is worked would ordinarily be charged as a working day, then the fifth day of that week will be charged as a working day whether or not the Contractor works on that day.

REVISE the sixth paragraph to read:

The Engineer will give the Contractor written notice of the Completion Date of the Contract after all the Contractor's obligations under the Contract have been performed by the Contractor. The following events must occur before the Completion Date can be established:

1. The physical Work on the project must be complete; and
2. The Contractor must furnish all documentation required by the Contract and required by law, to allow the Contracting Agency to process final acceptance of the Contract. The following documents must be received by the Project Engineer prior to establishing a Completion Date:

Provided to Builders Exchange of WA, Inc. For usage Conditions Agreement see www.bxwa.com - Always Verify Scale

a. Certified Payrolls (per Section 1-07.9(5)).
b. Material Acceptance Certification Documents
c. Quarterly Reports of Amounts Credited as DBE Participation, as required by the Contract Provisions.
d. Final Contract Voucher Certification
e. Copies of the approved "Affidavit of Prevailing Wages Paid" for the Contractor and all Subcontractors
f. Property owner releases per Section 1-07.24

SUPPLEMENT this Section with the following:

(*March 13, 1995, WSDOT GSP*)

This project shall be physically completed within 60 working days.

1-08.9 Liquidated Damages

(August 14, 2013 APWA GSP)

REVISE the fourth paragraph to read:

When the Contract Work has progressed to Substantial Completion as defined in the Contract, the Engineer may determine that the Work is Substantially Complete. The Engineer will notify the Contractor in writing of the Substantial Completion Date. For overruns in Contract time occurring after the date so established, the formula for liquidated damages shown above will not apply. For overruns in Contract time occurring after the Substantial Completion Date, liquidated damages shall be assessed on the basis of direct engineering and related costs assignable to the project until the actual Physical Completion Date of all the Contract Work. The Contractor shall complete the remaining Work as promptly as possible. Upon request by the Project Engineer, the Contractor shall furnish a written schedule for completing the physical Work on the Contract.

1-09 MEASUREMENT AND PAYMENT

1-09.1 Measurement of Quantities

(*April 2015 KENMORE GSP*)

SUPPLEMENT this Section with the following:

Month (MO) – Measured for each month that Work is actually performed. Partial payments will be made based upon the following guidelines:

Provided to Builders Exchange of WA, Inc. For usage Conditions Agreement see www.bxwa.com - Always Verify Scale

- Work done less than or equal to 10 working days within the pay period will be paid at 50% of the unit cost.
- Work done for more than 10 working days within the pay period will be paid at 100% of the unit cost.

Schedules submitted per Specifications during the pay period will be paid at 100% of the unit cost.

Day (Day) – Measured for each day that Work is actually performed. Portions of a day will be rounded up in half day increments.

1-09.6 Force Account

(*October 10, 2008 APWA GSP*)

SUPPLEMENT this Section with the following:

The Contracting Agency has estimated and included in the Proposal, dollar amounts for all items to be paid per force account, only to provide a common Proposal for Bidders. All such dollar amounts are to become a part of Contractor's total Bid. However, the Contracting Agency does not warrant expressly or by implication, that the actual amount of Work will correspond with those estimates. Payment will be made on the basis of the amount of Work actually authorized by Engineer.

1-09.9 Payments

(March 13, 2012 APWA GSP)

DELETE the first four paragraphs and REPLACE them with the following:

The basis of payment will be the actual quantities of Work performed according to the Contract and as specified for payment.

The Contractor shall submit a breakdown of the cost of lump sum Bid items at the Preconstruction Conference, to enable the Project Engineer to determine the Work performed on a monthly basis. A breakdown is not required for lump sum items that include a basis for incremental payments as part of the respective Specification. Absent a lump sum breakdown, the Project Engineer will make a determination based on information available. The Project Engineer's determination of the cost of Work shall be final.

Progress payments for completed Work and material on hand will be based upon progress estimates prepared by the Engineer. A progress estimate cutoff date will be established at the Preconstruction Conference.

Provided to Builders Exchange of WA, Inc. For usage Conditions Agreement see www.bxwa.com - Always Verify Scale

The initial progress estimate will be made not later than 30 days after the Contractor commences the Work, and successive progress estimates will be made every month thereafter until the Completion Date. Progress estimates made during progress of the Work are tentative, and made only for the purpose of determining progress payments. The progress estimates are subject to change at any time prior to the calculation of the final payment.

The value of the progress estimate will be the sum of the following:

1. Unit Price Items in the Bid Form — the approximate quantity of acceptable units of Work completed multiplied by the unit price.
2. Lump Sum Items in the Bid Form — based on the approved Contractor's lump sum breakdown for that item, or absent such a breakdown, based on the Engineer's determination.
3. Materials on Hand — 100 percent of invoiced cost of material delivered to job site or other storage area approved by the Engineer.
4. Change Orders — entitlement for approved extra cost or completed extra Work as determined by the Engineer.

Progress payments will be made in accordance with the progress estimate less:

1. Retainage per Section 1-09.9(1), on non FHWA-funded projects;
2. The amount of progress payments previously made; and
3. Funds withheld by the Contracting Agency for disbursement in accordance with the Contract Documents.

Progress payments for Work performed shall not be evidence of acceptable performance or an admission by the Contracting Agency that any Work has been satisfactorily completed. The determination of payments under the Contract will be final in accordance with Section 1-05.1.

1-09.11 Claims and Disputes

1-09.11(3) Time Limitation and Jurisdiction

(*July 23, 2015 APWA GSP*)

REVISE this Section to read:

For the convenience of the parties to the Contract it is mutually agreed by the parties that any claims or causes of action which the Contractor has against the Contracting Agency arising from the Contract shall be brought within 180 calendar days from the date of Final Acceptance (Section 1-05.12) of the Contract by the Contracting Agency; and it is further agreed that any such claims or causes of action shall be brought only in the Superior Court of the county where the Contracting Agency headquarters is

Provided to Builders Exchange of WA, Inc. For usage Conditions Agreement see www.bxwa.com - Always Verify Scale

located, provided that where an action is asserted against a county, RCW 36.01.05 shall control venue and jurisdiction. The parties understand and agree that the Contractor's failure to bring suit within the time period provided, shall be a complete bar to any such claims or causes of action. It is further mutually agreed by the parties that when any claims or causes of action which the Contractor asserts against the Contracting Agency arising from the Contract are filed with the Contracting Agency or initiated in court, the Contractor shall permit the Contracting Agency to have timely access to any records deemed necessary by the Contracting Agency to assist in evaluating the claims or action.

1-09.13 Claims Resolution

1-09.13(3) Claims $250,000 or Less

(*October 1, 2005 APWA GSP*)

DELETE this Section and REPLACE it with the following:

The Contractor and the Contracting Agency mutually agree that those claims that total $250,000 or less, submitted in accordance with Section 1-09.11 and not resolved by nonbinding ADR processes, shall be resolved through litigation unless the parties mutually agree in writing to resolve the claim through binding arbitration.

1-10 TEMPORARY TRAFFIC CONTROL

1-10.2 Traffic Control Management

1-10.2(1) General

SUPPLEMENT this Section with the following:

(January 8, 2016 WSDOT GSP)

Only training with WSDOT TCS card and WSDOT training curriculum is recognized in the State of Washington. The Traffic Control Supervisor shall be certified by one of the following:

The Northwest Laborers-Employers Training Trust
27055 Ohio Ave.
Kingston, WA 98346
(360) 297-3035

Evergreen Safety Council
12545 135th Ave. NE
Kirkland, WA 98034-8709
1-800-521-0778 or

Provided to Builders Exchange of WA, Inc. For usage Conditions Agreement see www.bxwa.com - Always Verify Scale

(425) 814-3930

The American Traffic Safety Services Association
15 Riverside Parkway, Suite 100
Fredericksburg, Virginia 22406-1022
Training Dept. Toll Free (877) 642-4637
Phone: (540) 368-1701

1-10.2(2) Traffic Control Plans
(*April 2015 KENMORE GSP*)

SUPPLEMENT this Section with the following:

Traffic Control Plans are included within the Plans. The Contractor shall submit written acceptance of the Traffic Control Plans or submit site specific Traffic Control Plans for approval by the Engineer. Traffic Control Plans shall include pedestrian access pathways as needed. Traffic Control Plans require a minimum of 5 working days for review.

Road closures are not included within this project but the Contracting Agency will consider Contractor-requested road closures. For requested road closures, a road closure plan including detours shall be submitted to the Engineer 10 working days prior to the required agency notification. If approved, 72 hour notification shall be given to the agencies noted on the City's Road Closure Notice prior to closure of any road. For closures on residential streets longer than an 8-hr period or on arterial streets, notice shall be placed in the local newspaper 72 hours prior to the closure and shall list the location, dates, and detour route. Approval for any road closure will be at the Contracting Agency's sole discretion.

During periods of Work suspension, a Traffic Control Plan shall be reviewed by the Engineer to keep the existing traveled lanes and pedestrian access open.

Lane closures will not be allowed between the hours of 7:00am and 9:00am and between 4:00pm and 6:00pm on the following streets:

*** NE 181st Street ***

1-10.2(4) Pedestrian Traffic Control
(April 2015 KENMORE GSP)

NEW Section:

Provided to Builders Exchange of WA, Inc. For usage Conditions Agreement see www.bxwa.com - Always Verify Scale

If no alternative is proposed within the Contract Plans, all existing pedestrian routes and access points within the project limits, including sidewalks and crosswalks, shall remain open and clear at all times. The Contractor may propose Traffic Control Plans (TCP's) that comply with the MUTCD, ADA requirements, and these Specifications. Contractor proposed TCP's detailing the alternative accessible pedestrian route shall be approved by the Engineer prior to implementation. The Plans will either be returned for correction, approved as noted, or approved for use by the end of a 5 working day review period. Each time the Plan is returned for correction, an additional 5-day review period may be necessary.

When the Engineer allows Work areas to encroach upon a sidewalk or crosswalk area, and minimum clear width of 48-inches cannot be maintained for pedestrian use, an alternative accessible pedestrian route shall be provided. Separation of pedestrians from the Work area and vehicular traffic is required.

Protective barricades, fencing, and bridges, together with warning and guidance devices and signs, shall be utilized so that the passageway for pedestrians is safe, well defined and accessible. Whenever pedestrian walkways are provided across excavations, they shall be provided with suitable handrails. Foot bridges shall be safe, strong, and free of bounce and sway, have a slip resistant coating, and be free of cracks, holes and irregularities that could cause tripping. Ramps, with a maximum slope of 8.3%, shall be provided at the entrance and exit of all raised footbridges. The maximum cross slope shall be 2.0%. When the existing facility is illuminated or TCP's requires illumination, illumination shall be provided during the hours of darkness. Retroreflective delineation shall be provided during hours of darkness.

Where accessible pedestrian routes are allowed to be closed by the Engineer during construction, an alternate accessible pedestrian route shall be provided that complies with the MUTCD, ADA requirements and these Specifications. The alternate accessible pedestrian route shall not have abrupt changes in grade or terrain. Barriers and channelizing devices shall be detectable to pedestrians who have visual disabilities. Where it is necessary to divert pedestrians into the Roadway, barricading or channelizing devices shall be provided to separate the pedestrian route from the adjacent vehicular traffic lane. Barricading or channelizing devices used to separate pedestrian and vehicular traffic shall be crashworthy and, when struck by vehicles, present a minimum threat to pedestrians, workers, and occupants of impacting vehicles. At no time shall pedestrians be diverted into a portion of the street used concurrently by moving vehicular traffic.

In addition the Traffic Control Plan shall address the following:

- All pedestrians, including persons with disabilities, shall be provided with a safe and accessible route.

Provided to Builders Exchange of WA, Inc. For usage Conditions Agreement see www.bxwa.com - Always Verify Scale

- The width of the existing pedestrian facility shall be maintained if possible. When it is not possible to maintain a minimum width of 60-inches throughout the entire length of the pedestrian route, a minimum width of 48-inches shall be provided with 60-inch x 60-inch passing zones spaced at maximum intervals of 200-feet to allow individuals in wheelchairs to pass.

- Traffic control devices and other construction materials and features shall not intrude into the usable width of the sidewalk, alternate accessible pedestrian route, or other pedestrian facility.

- Signs and other devices mounted lower than 84-inches above the temporary accessible pedestrian route shall not project more than 4-inches into the accessible pedestrian route.

- A smooth, continuous hard surface shall be provided throughout the entire length and width of the pedestrian route throughout construction. There shall be no curbs or vertical elevation changes greater than ½-inch in grade or terrain that could cause tripping or be a barrier to wheelchair use. Vertical elevation differences between ¼-inch and ½-inch shall be beveled at a maximum 2:1 slope.

- When channelization is used to delineate a pedestrian pathway, a continuous detectable edging shall be provided throughout the length of the facility such that pedestrians using a cane can follow it. Edging shall protrude at least 6-inches above the surface of the sidewalk or pathway with the bottom of the edging a maximum of 2-1/2 inches above the surface.

- Temporary ramps shall be provided when an alternate accessible pedestrian route crosses a curb and no permanent curb ramps are in place. The width of the curb ramp shall be a minimum of 48-inches and the maximum slope of the ramp shall be 8.3%. The maximum cross slope shall be 2.0%. The bottom of the curb ramp shall be flush with the Roadway. Temporary detectable warning mats shall be installed at street crossings.

- When possible, an alternate accessible pedestrian route shall be provided on the same side of the street as the disrupted route. When it is not possible, the alternate route shall be clearly identified at the nearest intersection crossing prior to the closure area.

- Information regarding closed pedestrian routes, alternate crossings, and sign and signal information shall be communicated to pedestrians with visual disabilities by providing devices such as audible information devices, accessible pedestrian signals, or barriers and channelizing devices that are detectable to the pedestrians traveling with the aid of a cane or who have low vision.

Provided to Builders Exchange of WA, Inc. For usage Conditions Agreement see www.bxwa.com - Always Verify Scale

- It is desirable that pedestrians cross to the opposite side of the Roadway at intersections rather than mid-block. Appropriate signing shall be placed at the intersections prior to any pedestrian route closure.

- If not otherwise stated in the Contract Provisions, access to transit stops shall be provided and maintained at all times. Transit stops may be temporarily relocated with approval of the transit agency and the Project Engineer.

- At locations where adjacent alternate walkways cannot be provided, appropriate signs shall be posted at the limits of construction and in advance of the closure at the nearest crosswalk or intersection, to divert pedestrians across the street. Physical barricades shall be installed to prevent visually impaired people from inadvertently entering a closed area.

1-10.4 Measurement

1-10.4(3) Reinstating Unit Items with Lump Sum Traffic Control

SUPPLEMENT this Section with the following:

(August 2, 2004 WSDOT GSP)

The Bid Proposal contains the item "Project Temporary Traffic Control," lump sum and the additional temporary traffic control items listed below. The provisions of Section 1-10.4(1), Section 1-10.4(3), and Section 1-10.5(3) shall apply.

***Pedestrian Traffic Control, lump sum ***

END OF DIVISION 1

Provided to Builders Exchange of WA, Inc. For usage Conditions Agreement see www.bxwa.com - Always Verify Scale

DIVISION 2
EARTHWORK

2-01 CLEARING, GRUBBING, AND ROADSIDE CLEANUP

2-01.2 Disposal of Usable Material and Debris

2-01.2(1) Disposal Method No. 1 - Open Burning

(April 2015 KENMORE GSP)

REPLACE this Section with the following:

Open burning will not be permitted on this project.

2-02 REMOVAL OF STRUCTURES AND OBSTRUCTIONS

2-02.3 Construction Requirements

2-02.3(3) Removal of Pavement, Sidewalks, Curbs, and Gutters

(April 2015 KENMORE GSP)

SUPPLEMENT this Section with the following:

Wastewater from Portland Cement Concrete, masonry, and asphalt concrete cutting operations shall not be discharged to storm drainage systems or surface waters.

To thoroughly clean saw cuts where necessary, the Contractor shall use high pressure water (high pressure water is considered greater than 1400 p.s.i.).

All wastewater shall be collected and disposed per Section 2-03.3(7)C. Disposal of the waste liquid may be to soil or other porous surfaces away from storm drains and surface water, only if the Contractor collects and disposes of remaining sediment after water has filtered into soil or evaporated. Impervious surfaces contaminated with sediment and grit from cutting, planing or pulverizing operations shall be cleaned by sweepers.

2-02.4 Measurement

(April 2015 KENMORE GSP)

SUPPLEMENT this Section with the following:

"Saw Cutting" will be measured per linear foot.

Provided to Builders Exchange of WA, Inc. For usage Conditions Agreement see www.bxwa.com - Always Verify Scale

Measurement for "Saw Cutting" will be for one cut (pass) only. Measure shall be along the finished cut line. Overcuts for curve/radius Work or deeper penetration shall be considered included within the unit Bid price and no separate measurement will be made for such cuts.

2-02.5 Payment

(April 2015 KENMORE GSP)

SUPPLEMENT this Section with the following:

"Saw Cutting", per linear foot.
The unit Contract price per linear foot for "Saw Cutting" shall be full pay for all costs necessary to complete the Work as specified regardless of the depth encountered or the material to be cut, including collection, removal, and disposal of slurry.

2-03 ROADWAY EXCAVATION AND EMBANKMENT

2-03.3 Construction Requirements

2-03.3(14) Embankment Construction

2-03.3(14)D Compaction and Moisture Control Tests

(April 2015 KENMORE GSP)

SUPPLEMENT this Section with the following:

Density compaction testing may also be conducted per the most current, applicable ASTM test standards.

At the discretion of the Engineer, visual inspection may be conducted for compliance with the Plans and Specifications.

2-03.4 Measurement

(April 2015 KENMORE GSP)

SUPPLEMENT this Section with the following:

Only one determination of the original ground elevation will be made on this project. Measurement for Roadway excavation and embankment will be based on the original ground elevations recorded previous to the Award of this Contract.

If discrepancies are discovered in the ground elevations which will materially affect the quantities of earthwork, the original computations of earthwork quantities will be adjusted accordingly.

Provided to Builders Exchange of WA, Inc. For usage Conditions Agreement see www.bxwa.com - Always Verify Scale

Earthwork quantities will be computed, either manually or by means of electronic data processing equipment, by use of the average end area method or by the finite element analysis method utilizing digital terrain modeling techniques.

Upon Award of the Contract, copies of the original ground cross-sections will be furnished to the successful Bidder on request to the Engineer.

2-09 STRUCTURE EXCAVATION

2-09.4 Measurement

REVISE the fourteenth paragraph to read:

Shoring or Extra Excavation – No specific unit of measurement shall apply to lump sum item of shoring or extra excavation Class A. No specific unit of measurement shall apply to lump sum item of shoring or extra excavation Class B.

2-09.5 Payment

SUPPLEMENT this Section with the following:

"Shoring or Extra Excavation Cl. B", lump sum.

2-11 TRIMMING AND CLEANUP

2-11.1 Description

(April 2015 KENMORE GSP)

SUPPLEMENT this Section with the following:

Paved street surfaces, existing and new shall be thoroughly cleaned with a vacuum street sweeper upon completion of Work and shall require daily cleaning as necessary to remove construction debris/materials. The Contractor shall also be required to inspect daily, haul routes and, if necessary, street sweep to remove debris. Upon completion of the Work, all haul routes shall be street swept.

2-11.4 Measurement

(*April 2015 KENMORE GSP*)

REPLACE this Section with the following:

No specific unit of measurement will be made for Trimming and Cleanup.

Provided to Builders Exchange of WA, Inc. For usage Conditions Agreement see www.bxwa.com - Always Verify Scale

2-11.5 Payment

(*April 2015 KENMORE GSP*)

REPLACE this Section with the following:

Payment for Trimming and Cleanup Work shall be considered included in the other Bid items.

END OF DIVISION 2

Provided to Builders Exchange of WA, Inc. For usage Conditions Agreement see www.bxwa.com - Always Verify Scale

DIVISION 5
SURFACE TREATEMENTS AND PAVEMENTS

5-04 HOT MIX ASPHALT

5-04.2 Materials
(April 2015 KENMORE GSP)

REVISE the fifth paragraph to read:

The Contractor may request the use warm mix asphalt (WMA) processes in the production of HMA. The Contractor shall submit to the Engineer for approval of the process that is proposed and how it will be used in the manufacture of HMA. Approval of the use of WMA will be at the sole discretion of the Engineer.

SUPPLEMENT this Section with the following:

All mixtures are considered dense graded HMA except HMA Aggregate Class ⅜". Asphalt Concrete Pavement (ACP) shall be considered the same as HMA.

The terms pavement, pavement surface, Roadway, Traveled Way, course, wearing course, HMA and other terms used in this Section that refer to HMA for Roadway, Traveled Way, or other pavement surfaces, shall also apply to HMA for sidewalk, pathways/trails, sidewalk ramps, driveway approaches, driveways, parking lots and patching.

5-04.3 Construction Requirements

5-04.3(8) Mixing

5-04.3(8)A Acceptance Sampling and Testing—HMA Mixture

5-04.3(8)A1 General
(January 16, 2014, APWA GSP)

DELETE this Section and REPLACE it with the following:

Acceptance of HMA shall be as defined under nonstatistical or commercial evaluation.

Nonstatistical evaluation will be used for all HMA not designated as Commercial HMA in the Contract Documents.

Provided to Builders Exchange of WA, Inc. For usage Conditions Agreement see www.bxwa.com - Always Verify Scale

The mix design will be the initial JMF for the class of HMA. The Contractor may request a change in the JMF. Any adjustments to the JMF will require the approval of the Project Engineer and must be made in accordance with Section 9-03.8(7).

Commercial evaluation may be used for Commercial HMA and for other classes of HMA in the following applications: sidewalks, road approaches, ditches, slopes, paths, trails, gores, prelevel, and pavement repair. Other nonstructural applications of HMA accepted by commercial evaluation shall be as approved by the Project Engineer. Sampling and testing of HMA accepted by commercial evaluation will be at the option of the Project Engineer. Commercial HMA can be accepted by a Contractor Certificate of Compliance letter stating the material meets the HMA requirements defined in the Contract.

5-04.3(8)A4 Definition of Sampling Lot and Sublot
(January 16, 2014, APWA GSP)

SUPPLEMENT this Section with the following:

For HMA in a structural application, sampling and testing for total project quantities less than 400 tons is at the discretion of the Engineer. For HMA used in a structural application and with a total project quantity less than 800 tons but more than 400 tons, a minimum of one acceptance test shall be performed:

i. If test results are found to be within Specification requirements, additional testing will be at the Engineers discretion.
ii. If test results are found not to be within Specification requirements, additional testing as needed to determine a CPF shall be performed.

5-04.3(8)A5 Test Results
(April 2015 KENMORE GSP)

REPLACE this Section with the following:

Test results will be provided to the Contractor upon request. Failing test results will be presented to the Contractor immediately upon determination. Failing test results may be challenged by the Contractor. The Contractors challenge shall be submitted in writing within 1 day from receipt of the failing test results.

Upon receipt of the request for retest, the City shall, at its own discretion:

a. For laboratory tests:
   i. Perform additional tests on remaining original sample or
   ii. Obtain representative samples taken from the same lot or

Provided to Builders Exchange of WA, Inc. For usage Conditions Agreement see www.bxwa.com - Always Verify Scale

iii. If representative samples cannot be obtained or there is insufficient material remaining from the original sample, asphalt core samples may be taken at the direction of the Engineer.

b. For field compaction test:

i. Asphalt core samples shall be taken at the direction of the Engineer

The sample will be tested for a complete gradation analysis, asphalt binder content, and Va, and the results of the retest will be used for the acceptance of the HMA in place of the original sublot sample test results. All testing shall be done by an approved testing facility of the Contracting Agency's choice and in accordance with these Specifications and ASTM/AASHTO testing procedures. Failure of the Contractor to meet the notification requirements will result in a forfeit to any claim against the test results

The cost of testing will be deducted from any monies due or that may come due to the Contractor under the Contract at a rate of $250 per sample or $500 per core.

5-04.3(8)A6 Test Methods

(January 16, 2014, APWA GSP)

DELETE this Section and REPLACE it with the following:

Testing of HMA for compliance of Va will be at the option of the Contracting Agency. If tested, compliance of Va will use WSDOT Standard Operating Procedure SOP 731. Testing for compliance of asphalt binder content will be by WSDOT FOP for AASHTO T 308. Testing for compliance of gradation will be by WAQTC FOP for AASHTO T 27/T 11.

5-04.3(10) Compaction

5-04.3(10)B Control

5-04.3(10)B1 General

(April 2015 KENMORE GSP)

SUPPLEMENT this Section with the following:

HMA used in sidewalks, trails and sidewalk ramps shall be compacted to a minimum of 90.0 percent of reference maximum density.

Reference maximum density will be determined by AASHTO T-209 or ASTM D-2041. Compaction percentage shall be determined by ASTM D-2950. Tests on asphalt lifts greater than 1 inch will be taken by the Contracting Agency approximately every 100 feet of length per travel lane paved (test range). Asphalt pavement less than 2 feet in

Provided to Builders Exchange of WA, Inc. For usage Conditions Agreement see www.bxwa.com - Always Verify Scale

width, less than 4 square feet, or 1 inch or less thick may be visually inspected at the discretion of the Engineer for compliance. Testing on sidewalks, trails, sidewalk ramps and travel lanes less than 8-foot width (from edge of pavement to edge of pavement) may be taken at the discretion of the Engineer.

NEW Section:

5-04.3(10)B3 Longitudinal Joint Density
(April 2015 KENMORE GSP)

For longitudinal joints that are not constructed with a notched wedge joint, the Project Engineer may evaluate the HMA wearing surface for low density at the longitudinal joint in accordance with WSDOT SOP 735.

5-04.3(10)B4 Test Results
(April 2015 KENMORE GSP)

REPLACE this Section with the following:

Compaction tests that meet or exceed the minimum percent compaction will be accepted. Tests that do not meet the minimum percent compaction will be rejected. Test results may be excepted if the average test within a test range (minimum of 3 tests taken) meets or exceeds the minimum percent compaction.

5-04.3(11) Reject Work

5-04.3(11)A General
(April 2015 KENMORE GSP)

SUPPLEMENT this Section with the following:

Paving sections that do not meet the requirements of Section 5-04.3(10)B1 shall be re-compacted (if asphalt is at sufficient temperature) until compaction is achieved. If asphalt has cooled below acceptable compaction temperatures, the asphalt shall be removed and replaced with new asphalt. Removal shall be at a minimum the representative testing area described for travel lanes in Section 5-04.3(10)B1.

At the discretion of the Engineer, failing test results may be accepted and the replacement requirement waived on a case by case basis.

5-04.3(11)C Rejection Without Testing
(April 2015 KENMORE GSP)

REVISE the last paragraph as follows:

Provided to Builders Exchange of WA, Inc. For usage Conditions Agreement see www.bxwa.com - Always Verify Scale

No payment will be made for rejected materials or the removal of the materials unless the Contractor requests that the rejected material be tested. If the Contractor elects to have the rejected material tested, a minimum of three representative samples will be obtained and tested. Acceptance of the rejected material will be based on conformance with the Plans and Specifications with at least two samples conforming. If the test results indicate the rejected material meets the requirements of the Plans and Specifications, the Contracting Agency will pay for the cost of the testing, the removal of the rejected material, and the rejected material. If the testing results indicate the rejected material does not meet the requirements, the Contractor shall pay for all costs associated with the testing and shall not be reimbursed for the cost of the removal of the rejected material.

5-04.3(12) Joints
(January 5, 2004, WSDOT GSP)

SUPPLEMENT this Section with the following:

The HMA overlay shall be feathered to produce a smooth riding connection to the existing pavement.

HMA utilized in the construction of the feathered connections shall be modified by eliminating the coarse aggregate from the mix at the Contractor's plant or the commercial source or by raking the joint on the Roadway, to the satisfaction of the Engineer.

5-04.3(13) Surface Smoothness
(March 13, 1995, WSDOT GSP)

The second sentence of this Section is DELETED and REPLACED with the following:

The completed surface of the wearing course shall not vary more than 1/4 inch from the lower edge of a 10-foot straightedge placed on the surface parallel to centerline.

5-04.4 Measurement
(April 2015 KENMORE GSP)

SUPPLEMENT this Section with the following:

No specific unit of measure will apply to the following items:

Soil Residual Herbicide
Longitudinal Joint Seals between HMA and cement concrete pavement
Removing Temporary Pavement Marking

Provided to Builders Exchange of WA, Inc. For usage Conditions Agreement see www.bxwa.com - Always Verify Scale

Temporary Pavement Markings
Water

5-04.5 Payment
(April 2015 KENMORE GSP)

SUPPLEMENT this Section with the following:

The following items shall be considered included in the various Bid items for HMA and no specific payment will be made:

Soil Residual Herbicide (per mile and per square yard)
Longitudinal Joint Seals
Removing Temporary Pavement Marking
Temporary Pavement Markings
Water

5-04.5(1) Quality Assurance Price Adjustments
(April 2015 KENMORE GSP)

DELETE this Section in its entirety.

5-04.5(1)A Price Adjustments for Quality of HMA Mixture
(April 2015 KENMORE GSP)

Delete this Section in its entirety.

5-04.5(1)B Price Adjustments for Quality of HMA Compaction
(April 2015 KENMORE GSP)

DELETE this Section in its entirety.

END OF DIVISION 5

Provided to Builders Exchange of WA, Inc. For usage Conditions Agreement see www.bxwa.com - Always Verify Scale

DIVISION 6
STRUCTURES

(******)
NEW Section:

6-20 Modular Block Walls

6-20.1 Description

This Work consists of furnishing and installing cement concrete modular block wall units as indicated in the Plans and as specified herein. The face of the wall shall offer a rock-face type appearance. Modular block units shall be earth tone in color.

This Work includes preparing foundation soil, furnishing and installing leveling pad, unit fill and backfill, and all appurtenant materials required for construction of the modular block wall as shown in the details and Plans.

6-20.2 Materials

Masonry Unit Materials
Masonry unit materials shall meet the following requirements:

ASTM C90, *Standard Specification for Loadbearing Concrete Masonry Units*.
ASTM C140, *Standard Test Methods for Sampling and Testing Concrete Masonry Units and Related Units*.
ASTM D698, *Standard Test methods for Laboratory Compaction Characteristics of Soil Using Standard Method*.

Concrete wall units shall have a minimum net 28-day compressive strength of 3000 psi.

Exterior dimensions may vary in accordance with ASTM C90. Dimension tolerance is +/- 1/8". Wall units shall have the following minimum Specifications:

Dimensions	6" x 16"
Weight	75 pounds
Face Area	0.67 sq. ft./unit

The maximum depth of the concrete wall units shall be 12".

Unit shall be radius faced with tapered sides. Units shall not require reinforcement, and shall be capable of attaining a maximum wall height of 3.5 feet. Supply special units as required to execute the design concepts.

Provided to Builders Exchange of WA, Inc. For usage Conditions Agreement see www.bxwa.com - Always Verify Scale

Units shall be interlocked as to provide a minimum one (1) inch setback per each course of wall height (1:8 batter).

Base Leveling Pad

Leveling pad materials shall be crushed surfacing top course meeting the requirements of Section 9-03.9(3) and shall be placed as shown in the Plans upon undisturbed native soils, to a minimum thickness of 6 inches.

Underlying geotextile as shown in the Plans shall meet the requirements of Section 9-33.2(1) Table 3 for Construction Geotextile for Soil Stabilization.

Wall Backfill

Wall backfill shall meet the requirements of Section 9-03.12(2) for Gravel Backfill for Walls.

A fabric meeting the requirements of Section 9-33.2(1) Table 3 for Construction Geotextile for Separation shall be placed between the excavation and the wall backfill as shown in the Plans.

Drainage Collection Pipe

When indicated for use in the Plans, drainage collection pipe shall meet the requirements of Section 9-05.2(6) for Perforated PVC Underdrain Pipe.

6-20.3 Construction Requirements

Modular block walls shall be of the type not requiring reinforcement. The Contractor shall make arrangements to purchase the modular block wall components from a source capable of providing materials meeting these Specifications.

A majority of this Work will be performed immediately adjacent to improved private property. The Contractor shall complete the Work in a timely fashion and shall grade and clean up the areas disturbed by such Work at the completion of the backfilling even though subsequent Work may be performed in these areas later in the project.

The Contractor shall excavate to the lines and grades shown in the Plans. Excavation shall conform to Section 2-09.3(4). Over-excavation not specifically authorized by the Engineer shall not be paid for and replacement with compacted fill and/or wall system components will be required at the Contractor's expense. The Contractor shall be careful not to disturb embankment materials beyond lines shown.

Submittals:

The Contractor shall submit catalog cuts of the modular blocks and shop plans of the wall layout for approval prior to beginning the Work, and submit a sample of each different unit for approval by the Engineer.

Provided to Builders Exchange of WA, Inc. For usage Conditions Agreement see www.bxwa.com - Always Verify Scale

Installation shall conform to the manufacturers recommendations for the type of unit furnished.

Provide copies of the manufacturer's installation instructions at least two (2) weeks prior to beginning the Work. Should a conflict arise between these Specifications and the manufacturer's instructions, the more rigorous Specification shall apply.

Foundation Soil Preparation and Leveling Pad Installation:
Foundation soil shall be excavated as required for footing dimensions shown in the Plans or as designated by the Engineer. The bottom wall course(s) shall be embedded below finish grade a minimum of three (3) inches.

Place, level, and compact the leveling pad materials. Compact the material with a plate compactor.

Material shall be placed so as to provide a level surface on which to place the first course of units. The leveling pad shall be prepared to insure complete contact of retaining wall unit with base.

Unit Installation:
First course of concrete wall face units shall be placed on the base leveling pad. The units shall be checked for level and alignment. The first course is the most important to insure accurate and acceptable results.

Units are placed side by side for full length of wall alignment, accounting for exact location of curves, corners, and vertical/horizontal steps. Begin laying wall units at the lowest point of the wall and/or 90-degree corner. Alignment may be accomplished by means of a string line or offset from base line.

Sweep top of underlying course prior to placing the next course. Install following courses of block units in running bond pattern so the middle of the unit is above the joint between adjacent blocks below, until reaching the top course. Backfill and compact the material in cells for each course installed before proceeding to the next course.

6-20.4 Measurement

Modular block wall will be measured by the square foot of completed front face in place. The bottom limits for vertical measurement will be the top of the leveling pad. The top limits for vertical measurement will be the top of wall as shown in the Plans. The horizontal limits for measurement are from the end of the wall to the end of the wall.

Provided to Builders Exchange of WA, Inc. For usage Conditions Agreement see www.bxwa.com - Always Verify Scale

6-20.5 Payment

Payment will be made in accordance with Section 1-04.1, for the following Bid item when included in the Proposal:

"Modular Block Wall", per square foot.

The unit Contract price per square foot for "Modular Block Wall" shall be full payment for all costs in conjunction with furnishing materials for, and constructing modular block walls, including constructing leveling pads, gravel backfill for walls, Structure excavation Class A including haul, shoring or extra excavation Class A, Shop Drawings, underdrain pipe when specified for use, gravel backfill for drains, and construction geotextile.

END OF DIVISION 6

Provided to Builders Exchange of WA, Inc. For usage Conditions Agreement see www.bxwa.com - Always Verify Scale

DIVISION 7
DRAINAGE STRUCTURES, STORM SEWERS, SANITARY SEWERS, WATER MAINS, AND CONDUITS

7-04 STORM SEWERS

7-04.2 Materials
(April 2015 KENMORE GSP)

SUPPLEMENT this Section with the following:

Ductile Iron Pipe 9-05.13

7-04.3 Construction Requirements

7-04.3(1) Cleaning and Testing

7-04.3(1)G Television Inspection
(April 2015 KENMORE GSP)

NEW Section:

The requirements of Section 7-17.3(2)H shall apply to storm sewers.

7-04.5 Payment
(April 2015 KENMORE GSP)

SUPPLEMENT this Section with the following:

"Ductile Iron Storm Sewer Pipe 12 In. Diam.", per linear foot.

The unit Contract price per linear foot for storm sewer pipe of the kind and size specified shall be full pay for all Work including all costs associated with providing, and install fittings, couplers, elbows, and tees. Work shall also include any labor, materials and equipment required for Structure excavation including haul, bedding materials, compaction, cleaning (flushing), television inspection, cleaning (flushing), and testing the pipe.

7-05 MANHOLES, INLETS, CATCH BASINS, AND DRYWELLS

Provided to Builders Exchange of WA, Inc. For usage Conditions Agreement see www.bxwa.com - Always Verify Scale

7-05.1 Description

(April 2015 KENMORE GSP)

SUPPLEMENT this Section with the following:

Work shall also consist of constructing connections to existing storm sewer pipes.

7-05.3 Construction Requirements

(April 2015 KENMORE GSP)

SUPPLEMENT this Section with the following:

Grate covers shall be per the standard details unless otherwise noted in the Plans.

7-05.3(5) Connection to Existing Storm Sewers

(April 2015 KENMORE GSP)

NEW Section:

Where shown in the Plans, the Contractor shall connect existing storm sewer pipes to new catch basins that have been installed on the project, or connect new storm sewer pipes to existing catch basins. Care shall be taken in cutting the existing pipe. The existing pipe shall be cut neat and clean at a distance of 1.5 pipe diameters from the edge of the new catch basin. The connection shall be made by carefully cutting or removing the existing pipe and installing a new section of pipe from the existing pipe into the new catch basin. Where new pipe is connected to existing pipe, the Contractor shall verify the type of existing pipe and join the pipes with a pipe adapter specifically manufactured for joining the pipes involved or as directed by the Engineer. The new section of pipe shall be the same size and material as the existing pipe, or an approved substitution. Connections, grouting, backfilling, and all other Work necessary to make the connection shall conform to appropriate provisions of Section 7-05.3.

The Contractor shall verify invert elevations prior to construction. Bypasses for existing storm sewers shall be in place prior to connections being made. The existing storm sewer shall be kept in operation at all times and the Contractor shall take precautions to protect the existing storm sewer and shall not allow any construction materials/debris to enter into the existing storm system. Water used for flushing and testing or cleaning shall not enter into the existing system.

All damage done to the existing storm sewer resulting from the Contractor's operation shall be repaired at no expense to the Contracting Agency.

Provided to Builders Exchange of WA, Inc. For usage Conditions Agreement see www.bxwa.com - Always Verify Scale

7-05.4 Measurement

(April 2015 KENMORE GSP)

SUPPLEMENT this Section with the following:

"Connection to Existing Storm Sewer" shall be per each.

7-05.5 Payment

(April 2015 KENMORE GSP)

SUPPLEMENT the first paragraph of this Section with the following:

"Connection to Existing Storm Sewer", per each
Payment for "Connection to Existing Storm Sewer" shall include all labor, materials, and equipment required to perform the Work as required by the Plans and Specifications. Work shall also include any labor, materials and equipment required for Structure excavation including haul, bedding and backfill materials, and compaction.

(******)
The unit Contract price per each for manholes, inlets, and catch basins of any kind and size specified shall be full pay for all labor, tools, materials, and equipment necessary to provide and install the item complete including removal, hauling, and disposing of pavement; Structure excavation including haul; bedding and backfill materials; compaction; seals; and frames and grates.

7-09 Water Mains

7-09.2 Materials

SUPPLEMENT this Section with the following:

(******)
Materials used for facilities owned by Northshore Utility District (NUD) shall meet the requirements of the 2014 Engineering Specifications, Materials of Construction, located in Appendix G of the Project Manual.

7-09.3 Construction Requirements

SUPPLEMENT this Section with the following:

(******)

Provided to Builders Exchange of WA, Inc. For usage Conditions Agreement see www.bxwa.com - Always Verify Scale

Work performed on facilities owned by Northshore Utility District (NUD) shall meet the requirements of the 2014 Engineering Specifications, Methods of Construction, located in Appendix G of the Project Manual.

7-09.4 Measurement

SUPPLEMENT this Section with the following:

(******)

"Additional Water Main Fittings (If Required)" will be measured per the pound of additional water main fittings, if required by the Engineer.

7-09.5 Payment

SUPPLEMENT this Section with the following:

(******)

"8" Cl. 52 DI Water Pipe", per linear foot.

The unit price per lineal foot for ductile iron water pipe, Cl 52, shall be full compensation for all labor, material, tools and equipment necessary and incidental to furnishing, excavating and laying, disinfecting, testing and placing in proper operating condition, all water pipe. Payment shall be made according to the lineal feet of pipe installed from centerline to centerline of fittings. Items of Work include, but are not limited to, the following items:

1. Clearing, grubbing and disposal of cleared materials, where required, including trees, stumps, and large rocks.

2. Excavation of all materials of whatever nature encountered, including solid rock.

3. Excavation and grading to reshape finished grade where shown in the Plans and as required by field conditions.

4. Tree fencing and any other tree protection measures as identified in the Plans.

5. Dewatering and proper disposal of water as required.

6. Hauling away and disposing of any excess material, including securing approved disposal site.

7. Handling, hauling, placing and mechanical compaction of foundation gravel, trench backfill and all other crushed rock or gravel material, native or imported.

Provided to Builders Exchange of WA, Inc. For usage Conditions Agreement see www.bxwa.com - Always Verify Scale

8. Furnishing and installing all water pipe, fittings, bends, restrained joints, and concrete blocking where shown in the Plans and including testing, disinfecting, and flushing.

9. Polyethylene encasing and 14 gauge solid copper locating wire.

10. Abandoning the existing water main including water tight seals and removal and disposal of valve boxes, pipe and appurtenances as required.

11. Maintenance and restoration of construction area and of other utilities affected by construction in accordance with the Plans and Specifications, including locating the existing water main, or other utilities, by potholing or by the use of other approved methods, prior to constructing the proposed water main.

12. Maintaining, and if necessary repairing existing water services or coordinating temporary water service with the Northshore Utility District for individual homes, during water line construction.

13. Temporary cold mix patch, asphalt treated base, or trench patch as required, placed immediately after trench backfill and subsequent removal.

14. Sawcut, removal, and proper disposal of asphalt concrete pavement to any depth encountered, including control of water slurry used in the cutting operation.

15. Traffic Control Measures including all signs, barricades, steel plates, temporary patching, flaggers, uniformed police officer and police vehicle, and setup and maintenance of the Traffic Control Measures.

"Connect to Existing Water System", per each.

The unit price Bid per each for connection to the existing water system shall constitute full compensation for all labor, materials, tools and equipment necessary and incidental to connecting to the Northshore Utility District's existing water system as shown in the Plans. This shall include potholing and locating the existing main, excavation, cutting and removing existing tees, valves, valve boxes and other fittings, cutting carrier pipe and furnishing and installing casing end seals, coupling adapters, plugs/caps, gaskets, bolts and other hardware, flanges, temporary blow-off assemblies, concrete blocking, disinfection and testing, removal of existing plugs, ductile iron reducers and ductile sleeves and plugging and abandonment of existing pipes.

Provided to Builders Exchange of WA, Inc. For usage Conditions Agreement see www.bxwa.com - Always Verify Scale

The cut-in and connection to the existing water main at each tee location shall be considered one (1) "Connect to Existing Water System".

"Additional Water Main Fittings (If Required), per pound.
The unit price Bid per pound for ductile iron fittings shall constitute full compensation for all labor, materials, tools and equipment necessary and incidental to providing and installing fittings not shown in the Plans or as otherwise required by the Northshore Utility District or field conditions. These items shall include, but not be limited to, the following:

1. Excavation of all materials of whatever nature encountered, including solid rock.

2. Dewatering and proper disposal of water as required.

3. Furnishing and installing all ductile iron fittings, bolts, gaskets, restrained joints, polyethylene encasing, and all hardware for proper jointing and operation including testing and disinfecting.

4. Concrete blocking in accordance with the Northshore Utility District Standard Water Details.

5. Sawcut, removal, and proper disposal of asphalt or cement concrete pavement.

6. Traffic control measures including all signs, barricades, steel plates, temporary patching, flaggers, uniformed police officer and police vehicle, and setup and maintenance of the traffic control measures.

Payment will be made based on the weight of the fittings only, and will not include the weight of gaskets, glands or restrained joints.

7-12 Valves for Water Mains

7-12.2 Materials

SUPPLEMENT this Section with the following:

(******)
Materials used for facilities owned by Northshore Utility District (NUD) shall meet the requirements of the 2014 Engineering Specifications, Materials of Construction, located in Appendix G of the Project Manual.

Provided to Builders Exchange of WA, Inc. For usage Conditions Agreement see www.bxwa.com - Always Verify Scale

7-12.3 Construction Requirements

SUPPLEMENT this Section with the following:

(******)

Work performed on facilities owned by Northshore Utility District (NUD) shall meet the requirements of the 2014 Engineering Specifications, Methods of Construction, located in Appendix G of the Project Manual.

7-12.5 Payment

SUPPLEMENT this Section with the following:

(******)

"8" Gate Valve Assembly", per each.

The unit price Bid per each valve assembly shall constitute full compensation for all labor, materials, tools and equipment necessary and incidental to furnishing, installing, testing and placing the valve in proper operating condition. This item shall include, but not be limited to, the following:

1. Clearing, grubbing and disposal of cleared materials, where required.

2. Excavation of all materials of whatever nature encountered, including solid rock.

3. Excavation and grading to reshape finished grade where shown in the Plans and as required by field conditions.

4. Dewatering and proper disposal of water as required.

5. Hauling away and disposing of any excess material, including securing approved disposal site.

6. Handling, hauling, placing and mechanical compaction of foundation gravel, trench backfill and all other crushed rock or gravel material, native or imported.

7. Maintenance and restoration of construction area and of other utilities affected by construction in accordance with the Plans and Specifications, including locating the existing water main, or other utilities, by potholing or by the use of other approved methods, prior to constructing the proposed water main.

Provided to Builders Exchange of WA, Inc. For usage Conditions Agreement see www.bxwa.com - Always Verify Scale

8. Furnishing and installing all valves, bolts, gaskets, restrained joints, polyethylene encasing, and all hardware for proper jointing and operation including testing and disinfecting.

9. Concrete blocking in accordance with the Northshore Utility District Standard Water Details.

10. Cast iron valve box, cover, valve operation nut extension, and asphalt or concrete protective pad in accordance with the Northshore Utility District Standard Water Details.

11. Sawcut, removal, and proper disposal of asphalt or cement concrete pavement.

12. Traffic control measures including all signs, barricades, steel plates, temporary patching, flaggers, uniformed police officer and police vehicle, and setup and maintenance of the traffic control measures.

Payment shall be made based on actual number of valves installed.

7-14 Hydrants

7-14.2 Materials

SUPPLEMENT this Section with the following:

(******)
Materials used for facilities owned by Northshore Utility District (NUD) shall meet the requirements of the 2014 Engineering Specifications, Materials of Construction, located in Appendix G of the Project Manual.

7-14.3 Construction Requirements

SUPPLEMENT this Section with the following:

(******)
Work performed on facilities owned by Northshore Utility District (NUD) shall meet the requirements of the 2014 Engineering Specifications, Methods of Construction, located in Appendix G of the Project Manual.

7-14.5 Payment

SUPPLEMENT this Section with the following:

Provided to Builders Exchange of WA, Inc. For usage Conditions Agreement see www.bxwa.com - Always Verify Scale

(******)

"Fire Hydrant Assembly", per each.

The unit price Bid per each for "Fire Hydrant Assembly" shall constitute full compensation for all labor, materials, tools and equipment necessary and incidental to furnishing and placing a correctly operating fire hydrant into operation in accordance with the Specifications and Northshore Utility District Standard Water Details. This item shall include, but not be limited to, the following:

1. Clearing, grubbing and disposal of cleared materials, where required.

2. Excavation of all materials of whatever nature encountered, including solid rock.

3. Excavation and grading to reshape finished grade where shown in the Plans and as required by field conditions.

4. Dewatering and proper disposal of water as required.

5. Hauling away and disposing of any excess material, including securing approved disposal site.

6. Handling, hauling, placing and mechanical compaction of foundation gravel, trench backfill and all other crushed rock or gravel material, native or imported.

7. Maintenance and restoration of construction area and of other utilities affected by construction in accordance with the Plans and Specifications, including locating the existing water main, or other utilities, by potholing or by the use of other approved methods, prior to constructing the proposed water main.

8. Furnishing and installing hydrant assembly, gate valve, valve box, restrained joint ductile iron pipe from the mainline to the hydrant (or stainless steel tie rods in lieu of restrained joints), polyethylene encasing, testing and disinfecting.

9. Concrete blocking, gravel, visqueen and other miscellaneous items and hardware required for proper installation and operation.

10. Concrete slab (3' x 3' x 6" minimum depth) at base of fire hydrant.

11. Rockery, if required.

Provided to Builders Exchange of WA, Inc. For usage Conditions Agreement see www.bxwa.com - Always Verify Scale

12. Concrete guard posts, if required.

13. Culvert crossing, if required.

14. Sawcut, removal, and proper disposal of asphalt or cement concrete pavement.

15. Traffic control measures including all signs, barricades, steel plates, temporary patching, flaggers, uniformed police officer and police vehicle, and setup and maintenance of the traffic control measures.

Payment will be made based on actual number of approved hydrant assemblies installed. Existing fire hydrants identified in the Plans to be removed shall be salvaged, cleaned, and delivered to the Northshore Utility District Maintenance yard as directed by the District. Payment for removal of existing fire hydrant assembly shall be considered incidental to other Bid items and no separate payment shall be made. Payment for the tee at the water main will be made under the Bid item for the water main and no additional compensation will be allowed.

7-15 Service Connections

7-15.2 Materials

SUPPLEMENT this Section with the following:

(******)
Materials used for facilities owned by Northshore Utility District (NUD) shall meet the requirements of the 2014 Engineering Specifications, Materials of Construction, located in Appendix G of the Project Manual.

7-15.3 Construction Requirements

SUPPLEMENT this Section with the following:

(******)
Work performed on facilities owned by Northshore Utility District (NUD) shall meet the requirements of the 2014 Engineering Specifications, Methods of Construction, located in Appendix G of the Project Manual.

7-15.5 Payment

SUPPLEMENT this Section with the following:

Provided to Builders Exchange of WA, Inc. For usage Conditions Agreement see www.bxwa.com - Always Verify Scale

(******)

"1-1/2" Water Service and Reconnection", per each.

"3/4" or 1" Water Service and Reconnection", per each.

The unit price Bid per each "___" Water Service and Reconnection" shall constitute full compensation for all labor, material, tools and equipment necessary and incidental to replacing the existing water service with a new service at the location shown in the Plans in accordance with the Northshore Utility District Standard Water Detail and typical detail shown in the Plans. This item includes, but is not limited to, the following:

1. Clearing, grubbing and disposal of cleared materials, where required, including trees, stumps, and large rocks.

2. Excavation of all materials of whatever nature encountered, including solid rock.

3. Excavation and grading to reshape finished grade where shown in the Plans and as required by field conditions.

4. Dewatering and proper disposal of water as required.

5. Hauling away and disposing of any excess material, including securing approved disposal site.

6. Handling, hauling, placing and mechanical compaction of foundation gravel, trench backfill and all other crushed rock or gravel material, native or imported.

7. Tapping the new main and securing of the polyethylene encasement material.

8. New polyethylene service pipe, length as required from the main to the new meter box, including pressure and purity testing.

9. New water meter box, cover and lid, copper setter and fittings per the Northshore Utility District Standard Water Detail and typical detail. Salvage the existing meter to be re-installed by the Contractor in coordination with the District.

10. Locate private water service at the point of connection.

11. New private service pipe, fittings and bedding as required to connect the existing private service to the backside of the new copper setter.

Provided to Builders Exchange of WA, Inc. For usage Conditions Agreement see www.bxwa.com - Always Verify Scale

12. Removal and disposal of existing meter setter, meter box and miscellaneous fittings and pipe.

13. Adjustment and reconnection of irrigation control and backflow prevention devices and boxes as required.

14. Abandoning existing water service, including capping the existing service line water tight near the existing meter.

15. Sawcut, removal, and proper disposal of asphalt or cement concrete pavement.

16. Temporary cold mix patch, or asphalt treated base as required, placed immediately after trench backfill and subsequent removal.

17. Adjusting or altering the connection or meter box location as necessary in order to avoid existing utilities or structures and obstructions, such as telephone or electrical junction boxes or pedestals.

18. Furnishing and installing 14-gauge solid copper locating wire, continuous from the main line locating wire to the meter setter.

19. Traffic control measures including all signs, barricades, steel plates, temporary patching, flaggers, uniformed police officer and police vehicle, and setup and maintenance of the traffic control measures.

END OF DIVISION 7

Provided to Builders Exchange of WA, Inc. For usage Conditions Agreement see www.bxwa.com - Always Verify Scale

DIVISION 8
MISCELLANEOUS CONSTRUCTION

8-01 EROSION CONTROL AND WATER POLLUTION CONTROL

8-01.3 Construction Requirements

8-01.3(1) General

(April 2015 KENMORE GSP)

SUPPLEMENT this Section with the following:

The Contractor shall bear sole responsibility for damage to completed portions of the project and to property located off the project caused by erosion, siltation, runoff, or other related items resulting from the Contractor's actions. The Contractor shall also bear sole responsibility for any pollution of rivers, streams, groundwater, or other water which may occur as a result of construction operations. The Contractor shall be responsible for damage and clean-up of any sedimentation or pollution caused by the Contractor's operations or actions.

If the Contractor does not meet the Engineer's requirements, the Engineer may (without further notice) provide the necessary erosion control and deduct all of the costs thereof from any payments due or coming due the Contractor.

No additional sediment shall be allowed to accumulate within a catch basin. If cleaning during construction is needed, the cleaning operation shall not flush sediment-laden water into the downstream system. The cleaning shall be conducted using a approved vacuum truck capable of jet rodding the lines. The collection and disposal of the sediment shall be the responsibility of the Contractor at no cost to the Contracting Agency.

8-01.3(1)A Submittals

(April 2015 KENMORE GSP)

SUPPLEMENT this Section with the following:

If no TESC Plan is included in the Plans, the Contractor shall submit a TESC Plan that meets all requirements of Chapter 6, Section 6-2 of the current edition of the WSDOT Highway and Runoff Manual, the Department of Ecology (DOE), and all applicable permits. Where conflicts arise between the Manual, DOE requirements and any permits, the order of requirements of the permits shall prevail followed by the DOE requirements.

Provided to Builders Exchange of WA, Inc. For usage Conditions Agreement see www.bxwa.com - Always Verify Scale

The TESC Plan shall include the following requirements:

- The Contractor shall keep daily inspection records of all erosion control measures and practices. Daily inspection records shall, at a minimum, contain the date, location, erosion control measure in place, adjustments/additions/removals, areas of concern and response to such concern.

- Once per week, the Contractor shall take turbidity and pH measurements at the exit points of all storm water outfalls that exit the project limits. Turbidity measurements shall be obtained by a licensed and qualified individual or a licensed and qualified firm. Sampling and testing shall be done in compliance with industry standards for sampling and testing water for turbidity and pH.

- Test results that indicate turbidity is higher than the base line turbidity or pH that is ± 1 from the base line shall be considered out of compliance and water shall be treated to within tolerance levels prior to entering the storm system.

The Contractor shall submit test results and inspection logs at the end of each month.

8-02 ROADSIDE RESTORATION

8-02.2 Materials

(April 2015 KENMORE GSP)

SUPPLEMENT the first paragraph with the following:

Root Barrier 9-14.8

8-02.3 Construction Requirements

8-02.3(1) Responsibility During Construction

(April 2015 KENMORE GSP)

SUPPLEMENT this Section with the following:

Throughout planting operations, the Contractor shall keep the premises clean, free of excess soils, plants, and other materials, including refuse and debris, resulting from the Contractor's Work. At the end of each Work day, and as each planting area is completed, it shall be neatly dressed, and all surrounding walks and paved areas shall be swept to remove soil and plant debris. At the conclusion of Work, the Contractor shall remove surplus soils, materials, and debris from the construction site.

Provided to Builders Exchange of WA, Inc. For usage Conditions Agreement see www.bxwa.com - Always Verify Scale

8-02.3(5) Planting Area Preparation

(April 2015 KENMORE GSP)

SUPPLEMENT this Section with the following:

Notify the Engineer of possible poor draining or heavily compacted soil conditions prior to proceeding with construction.

The planting area shall be compacted to 85% maximum density to establish proper finish grade unless specified elsewhere.

8-02.3(17) Property Restoration

NEW Section:

(******)
The Contractor shall blend the new construction into developed private property adjacent to the project using similar materials to those existing, (e.g. sod shall be use match into lawn areas, bark shall be used to match into planting areas, topsoil shall be used to match into garden areas, etc.).

The Contractor shall repair and restore existing public and/or privately owned irrigation systems damaged by construction, where directed by the Engineer.

If the items used for the restoration have pay items in the Contract, they will be paid under those items.

If restoration of adjacent property requires use of materials that have no pay items, payment will be by force account under the item "Property Restoration".

8-02.3(18) Root Barrier

(*April 2015 KENMORE GSP*)

NEW Section:

Work shall consist of providing and installing root barriers per the manufacturer's recommendations where indicated in the Plans.

8-02.4 Measurement

(April 2015 KENMORE GSP)

SUPPLEMENT this Section with the following:

Provided to Builders Exchange of WA, Inc. For usage Conditions Agreement see www.bxwa.com - Always Verify Scale

"Root Barrier – 18 In.", will be measured by the linear foot (measurement in bid item is for height of root barrier).

(******)
Topsoil Type A will be measured by the cubic yard in the haul conveyance at the point of delivery.

Tree Grate will be measured per each.

8-02.5 Payment

(April 2015 KENMORE GSP)

SUPPLEMENT this Section with the following:

"Root Barrier – ___ In.", per linear foot
The unit Contract price per linear foot for "Root Barrier -- 18 In.", including all incidental Work, shall be full pay for all labor, material, tools and equipment necessary to satisfactorily complete the Work as defined in the Plans and Specifications.

(******)
"Property Restoration", per force account.

Payment for "Property Restoration" shall be by force account as described in Section 1-09.6 of the Standard Specifications, including full compensation to relocate, replace, or modify existing public and/or private improvements, including irrigation restoration or landscaping, and no other compensation will be allowed.

For the purpose of providing a common Bid Proposal for all Bidders and for that purpose only, the estimated cost of this Bid item has been arbitrarily entered in the Proposal to become part of the total Bid by the Contractor.

"Topsoil Type A", per cubic yard.
The unit Contract price per cubic yard for "Topsoil Type A" shall be full pay for providing the source of material, for pre-excavation weed control, excavating, loading, hauling, stockpiling, and removal, placing, spreading, processing, cultivating, and compacting the topsoil.

"Tree Grate", per each.

8-03 IRRIGATION SYSTEMS

8-03.3 Construction Requirements

Provided to Builders Exchange of WA, Inc. For usage Conditions Agreement see www.bxwa.com - Always Verify Scale

8-03.5 Payment

(April 2015 KENMORE GSP)

REVISE the third paragraph to read:

Payment for water used through any Contracting Agency-provided water meter for the Contract shall be the responsibility of the Contractor for the life of the Contract, including the plant establishment period.

8-04 Curbs, Gutters, and Spillways

8-04.3 Construction Requirements

SUPPLEMENT this Section with the following:

(******)

Cement concrete vertical curb and gutter shall be constructed in accordance with 2007 King County Road Standards Figure No. 3-002.

8-04.5 Payment

SUPPLEMENT this Section with the following:

(******)

"Cement Conc. Vertical Curb and Gutter", per linear foot.

NEW Section:

(******)

8-05 Pedestrian Railing

8-05.1 Description

This Work consists of furnishing and construction pedestrian railing of the type specified in accordance with the Plans and these Specifications at the locations shown in the Plans and in conformity with the lines as staked.

8-05.2 Materials

Pedestrian railing shall be industrial strength ornamental steel, model Aegis II® – Majestic manufactured by Ameristar, or approved equal. Color shall be black. Height shall be 4 feet.

Ameristar®
1555 N. Mingo
Tulsa, OK 74116
1-888-333-3422

Provided to Builders Exchange of WA, Inc. For usage Conditions Agreement see www.bxwa.com - Always Verify Scale

www.ameristarfence.com

8-05.3 Construction Requirements

Pedestrian railing shall be installed in accordance with the manufacturer's recommendations. The Contractor shall obtain all the necessary product information to facilitate installation of the complete pedestrian railing system.

8-05.4 Measurement

Pedestrian railing will be measured by the linear foot of completed railing, along the ground line.

8-05.5 Payment

Payment will be made in accordance with Section 1-04.1, for the following Bid item when included in the Proposal:

"Pedestrian Railing", per linear foot.
The unit Contract price per linear foot for "Pedestrian Railing" shall be full payment for all costs for the specified Work, including all labor, material, tools and equipment necessary or incidental to furnish and install the complete railing system including the connection to the wall.

8-06 CEMENT CONCRETE DRIVEWAY ENTRANCES

8-06.3 Construction Requirements

(April 2015 KENMORE GSP)

REVISE the first sentence of the third paragraph to read:

At the Safeway driveway or when one driveway exists to a property, the Contractor shall construct the driveway entrance in two (2) or more segments to permit access to an existing driveway. When there are two or more driveways to a property, one (1) must be maintained at all times for access during driveway construction. With written approval from the property owner, driveways may be closed for construction. The Contractor shall notify the property owner and tenants at least 48 hours prior to any driveway access impacts.

At the Safeway driveway or when one driveway exists and cannot be poured in two (2) or more segments, concrete placed shall be a high/early mix capable of reaching specified strength within 72 hours.

8-06.4 Measurement

(August 2015 KENMORE GSP)

Provided to Builders Exchange of WA, Inc. For usage Conditions Agreement see www.bxwa.com - Always Verify Scale

SUPPLEMENT this Section with the following:

Measurement will include from back of curb to back of sidewalk and will include driveway wings.

8-06.5 Payment

SUPPLEMENT this Section with the following:

(******)
"Cement Conc. Driveway Entrance Type 2 - ___ In.", per square yard.

8-14 CEMENT CONCRETE SIDEWALKS

8-14.3 Construction Requirements

8-14.3(3) Placing and Finishing Concrete
(April 2015 KENMORE GSP)

SUPPLEMENT this Section with the following:

The surface shall be brushed with a fiber hair brush of an approved type in a transverse direction except that at driveway and alley crossings it shall be brushed longitudinally. The placing and finishing of all sidewalks shall be performed under the control of the City Construction Inspector. After brush finish, the edges of the sidewalk and all joints shall be lightly edged again with an edging tool to give it a finished appearance.

Sidewalks adjacent to driveways shall be constructed per Special Provisions Section 8-06.3.

Sidewalks, curb ramps and landings shall not exceed maximum slopes shown in the Plans at any one location measured.

8-14.3(4) Curing
(April 2015 KENMORE GSP)

SUPPLEMENT this Section with the following:

In periods of low humidity, drying winds, or high temperatures, a fog spray shall be applied to concrete as soon after placement as conditions warrant to prevent the formation of shrinkage cracks. The spray shall be continued until conditions permit the application of a liquid curing membrane or other curing media.

Provided to Builders Exchange of WA, Inc. For usage Conditions Agreement see www.bxwa.com - Always Verify Scale

When the air temperature is expected to reach the freezing point during the day or night, the concrete shall be protected from freezing. The Contractor shall provide suitable blanketing material and spread it over the pavement to prevent freezing of the concrete. The Contractor shall be responsible for the quality and strength of the cured concrete. Any concrete injured by frost action or freezing shall be removed and replaced at the Contractor's expense in accordance with these Specifications.

NEW Section:

(******)

8-14.3(6) Documentation

The Contractor shall perform as-constructed ADA compliance field checks for all new sidewalk constructed on the project and provide documentation to the Engineer for approval, certifying that all slopes along sidewalks meet the slope criteria set forth in the Plans and the 2005 PROWAG. The Contractor shall verify the as-constructed slopes of the sidewalks with readings of a 4-foot long "smart level" placed along all fall lines of sidewalks, and include the readings in the provided documentation.

8-14.4 Measurement

(April 2015 KENMORE GSP)

SUPPLEMENT this Section with the following:

Measurement for "Cement Conc. Sidewalk" will include the horizontal finished surface area of the thickened edge and/or the integral curb if included in the plans. "Cement Conc. Sidewalk Thickened Edge" will be measured along the centerline length of the integral curb.

8-14.5 Payment

(April 2015 KENMORE GSP)

SUPPLEMENT the first paragraph of this Section with the following:

"Cement Conc. Sidewalk Thickened Edge", per linear foot.
Payment for "Cement Conc. Sidewalk Thickened Edge" per linear foot shall include all additional labor, materials, and equipment required to construct the thickened edge and integral curb for sidewalk.

SUPPLEMENT this Section with the following:

(******)

Provided to Builders Exchange of WA, Inc. For usage Conditions Agreement see www.bxwa.com - Always Verify Scale

Payment for "Cement Conc. Sidewalk" and "Cement Conc. Sidewalk with Thickened Edge" as specified shall be contingent on the Contractor certifying that all slopes, lines and grades comply with Contract Documents in provided and accepted documentation. All Work not in compliance with Contract Documents shall be considered defective and all costs associated with removing or replacing defective Work shall be the Contractor's responsibility in accordance with Section 1-05.7.

Payment for documentation requirements as specified and installation of project plaque shall be considered as incidental to the "Cement Conc. Sidewalk" and "Cement Conc. Sidewalk Thickened Edge" Bid items.

8-18 MAILBOX SUPPORT

8-18.1 Description

SUPPLEMENT this Section with the following:

(******)
This Work consists of providing and installing Neighborhood Delivery and Collection Box Units (N.D.C.B.U.) in accordance with the Plans, these Specifications, and King County Road Design and Construction Standards (KCDCS).

8-18.3 Construction Requirements

SUPPLEMENT this Section with the following:

(******)
Where shown in the Plans, N.D.C.B.U.s shall be installed in accordance with KCDCS Figure 7-005.

8-18.4 Measurement

SUPPLEMENT this Section with the following:

(******)
N.D.C.B.U. mailbox will be measured per each.

8-18.5 Payment

SUPPLEMENT this Section with the following:

(******)
"N.D.C.B.U. Mailbox", per each.

Provided to Builders Exchange of WA, Inc. For usage Conditions Agreement see www.bxwa.com - Always Verify Scale

The unit Contract price per each for "N.D.C.B.U. Mailbox", shall be full payment for a complete installation, including foundation, expansion joints, mounting hardware, providing and mounting the N.D.C.B.U. to the foundation.

8-20 ILLUMINATION, TRAFFIC SIGNAL SYSTEMS, INTELLIGENT TRANSPORTATION SYSTEMS, AND ELECTRICAL

8-20.3 Construction Requirements

8-20.3(5) Conduit

(King County GSP)
DELETE this Section in its entirety and REPLACE it with the following:

Installation of conduit shall conform to appropriate articles of the Code and these Specifications.

The size of conduit used shall be as shown in the Plans. Conduits smaller than 1-inch electrical trade size shall not be used unless otherwise specified, except that grounding conductors at service points may be enclosed in 1/2 -inch diameter conduit.

It shall be the option of the Contractor, at no expense to the Contracting Agency, to use larger size conduit if desired, and where larger size conduit is used, it shall be for the entire length of the run from outlet to outlet. Reducing couplings will not be permitted.

Conduit between light standards, PPB, PS, or Type 1 poles and the nearest junction box shall be the diameter specified in the Plans. Larger size conduit is not allowed at these locations. At other locations, it shall be the option of the Contractor, at no expense to the Contracting Agency, to use larger size conduit if desired, and where larger size conduit is used it shall before the entire length of the run from outlet to outlet. Reducing couplings will not be permitted.

The ends of all conduits, metallic and nonmetallic, shall be well reamed to remove burrs and rough edges. Field cuts shall be made square and true. Slip joints or running threads will not be permitted for coupling metallic conduit; however, running threads will be permitted in traffic signal head spiders and RGS outerduct. When installing rigid galvanized steel conduit and a standard coupling cannot be used, an approved three-piece coupling shall be used. Conduit fittings and couplings for steel conduit shall be cleaned first and then painted with one coat of paint conforming to Section 9-08.1(2)B. The paint shall have a minimum wet film thickness of 3 mils. The painted coating shall cover the entire coupling or fitting. The threads

Provided to Builders Exchange of WA, Inc. For usage Conditions Agreement see www.bxwa.com - Always Verify Scale

on all metallic conduits shall be rust-free, clean and painted with a good quality colloidal copper suspended in a petroleum vehicle before couplings are made. All metallic couplings shall be tightened so that a good electrical connection will be made throughout the entire length of the conduit run. If the conduit has been moved after assembly, it shall be given a final tightening from the ends prior to backfilling. Non-metallic conduit shall be assembled using the solvent cement specified in Section 9-29.1. Where coating on galvanized conduit has been damaged in handling or installing, such damaged areas shall be thoroughly painted with galvanizing repair paint, Formula A-9-73.

Conduit ends shall be capped (do not glue non-metallic caps). Metallic conduit ends shall be threaded and capped with standard threaded conduit caps until wiring is started. When conduit caps are removed, the threaded ends shall be provided with approved conduit bushings or end bells (do not glue in place) for nonmetallic conduit.

Conduit stubs from controller cabinet foundations shall extend to the nearest junction box in that system.

Metallic conduit stubs, caps, and exposed threads shall be painted with galvanizing repair paint Formula A-9-73.

Metallic conduit bends, shall have a radius consistent with the requirements of Article 344.24 and other articles of the Code. Where factory bends are not used, conduit shall be bent, using an approved conduit bending tool employing correctly sized dies, without crimping or flattening, using the longest radius practicable.

Nonmetallic conduit bends, where allowed, shall conform to Article 352.24 of the Code. Eighteen-inch radius elbows shall be used for PVC conduit of 2-inch nominal diameter or less. Standard sweep elbows shall be used for PVC conduit with greater than 2-inch nominal diameter unless otherwise specified in the Plans. In nonmetallic conduit less than 2-inch nominal diameter, pull ropes or flat tapes for wire installation shall not be less than ¼-inch diameter or width. In nonmetallic conduit of 2-inch nominal diameter or larger, pull ropes or flat tapes for wire installation shall not be less than ½-inch diameter or width.

Conduit shall be laid so that the top of the conduit is a minimum depth of:

1. 24 inches below the bottom of the curb in sidewalk areas
2. 24 inches below the top of roadway base
3. 48 inches below the bottom of ties under railroad tracks unless otherwise specified by the Rail Road Company.
4. 24 inches below the finish grade in all other areas.

Rigid galvanized steel conduit shall be installed at the following locations:

Provided to Builders Exchange of WA, Inc. For usage Conditions Agreement see www.bxwa.com - Always Verify Scale

1. Within railroad Right-of-Way
2. All pole risers, except as otherwise required by owning utilities.
3. All bends with radius less than 3 feet on runs over 180 feet in length. Runs embedded within reinforced concrete Structures are exempted.
4. All other locations noted in the Contract.
5. All runs externally attached to Structures.
6. All runs within slip form Structures.

Galvanized steel conduit or Schedule 80 polyvinyl chloride (PVC) conduits shall be installed at the following locations:

1. All Roadbed crossings.
2. All conduit entering foundations.
3. All other locations noted in the Contract.

Schedule 40 or Schedule 80 PVC conduit shall be installed at the following locations:

1. All runs installed at traffic signal installations, except road crossings or where externally attached.
2. All other locations noted in the Contract.

Couplings in cabinet foundations shall be PVC Schedule 40. The stub-outs above the couplings shall be PVC end bell bushings. The Schedule 40 section of PVC between the coupling and end bell bushings shall be installed without glue.

Conduit runs, without innerduct, installed using the directional boring method, that enter the Traveled Way or Shoulders shall be Schedule 80 high-density polyethylene (HPDE) Schedule 80 PVC with mechanical couplings, or rigid galvanized steel.

Metallic and nonmetallic conduit installation shall include equipment grounding conductor and shall conform to requirements noted in the WSDOT Standard Plans.

Multicell conduit runs, installed outside the Traveled Way and Shoulders, when using the directional boring method shall have 4-inch PVC Schedule 40 outerduct with mechanical couplings or 4-inch rigid galvanized steel outerduct. The conduit shall be installed with four 1-inch smooth wall innerducts.

When HDPE conduit is used for directional boring, it shall be continuous, with no joints for the full length of the bore. The conduit run shall be extended to the associated outlets with the same schedule HDPE or PVC conduit. Entry into associated junction box outlets shall be with the same schedule PVC conduit and

Provided to Builders Exchange of WA, Inc. For usage Conditions Agreement see www.bxwa.com - Always Verify Scale

elbows. The same requirements apply for extension of an existing HDPE conduit crossing.

PVC conduit and elbows shall be connected to HDPE conduit with an approved mechanical coupling. The connection shall have a minimum pullout strength of 700 pounds. Prior to installation of a mechanical coupling, the HDPE conduit shall first be prepared with a clean, straightedge. A water-based pulling lubricant may be applied to the threaded end of the mechanical coupling before installation. Solvent cement or epoxy shall not be used on the threaded joint when connecting the HDPE conduit to the mechanical coupling. The mechanical coupling shall be rotated until the HDPE conduit seats approximately ¾ of the distance into the threaded coupling depth.

For PVC installation through a directional bore, the PVC shall be in rigid sections assembled to form a watertight bell and spigot-type mechanical joint with a solid retaining ring around the entire circumference of the conduit installed per the manufacturer's recommendations. The conduit run shall be extended beyond the length of the bore, to the associated outlets with the same mechanical coupled PVC or with standard PVC conduit of the same schedule. The same requirements apply for extension of an existing PVC conduit Roadway crossing.

Liquid tight flexible metal conduit is allowed only at locations called for in the Plans.

At all other locations, conduit shall be PVC or rigid galvanized steel and the same type of conduit shall be used for the entire length of the run, from outlet to outlet. Standard PVC conduit shall be connected with medium-grade gray solvent applied per manufacturer's recommendations.

When nonmetallic conduit is installed, care shall be used in excavating, installing and backfilling, so that no rocks, wood or other foreign material will be left in a position to cause possible damage.

When PVC conduit is installed by a method other than directional boring, conduit shall be Schedule 40, with the exception that PVC conduit within the Traveled Way or Shoulders and service lateral runs shall be Schedule 80.

Conduit shall be placed under existing pavement by approved directional boring, jacking or drilling methods at locations approved by the Engineer. The pavement shall not be disturbed unless allowed in the Plans, or with the approval of the Engineer in the event that obstructions or impenetrable soils are encountered.

Directional Boring:

General

Provided to Builders Exchange of WA, Inc. For usage Conditions Agreement see www.bxwa.com - Always Verify Scale

The Contractor shall provide all materials, equipment and labor necessary to install the conduit using Horizontal Directional Boring (HDB) as shown in the Plans. Where new conduit installation is shown in the Plans, it shall be the option of the Contractor, at no expense to the Contracting Agency, to use horizontal directional boring method as an alternative to trenching. Directional boring for electrical installations shall be supervised by a licensed Electrical Contractor in accordance with Section 8-20.1(1).

Prior to Commencing Drilling Operation

Prerequisites for HDB for the Contractor are a minimum of two (2) years of experience installing conduit using HDB for both driller and locator. Provide details of similar Contract experience successfully completed or in progress within the last three (3) years. This shall include at least three (3) projects of similar difficulty and magnitude to this project.

The Contractor shall provide the Engineer with a drilling plan and data that shall include, at a minimum:

1. Equipment – The Contractor shall be responsible for selecting the equipment used during the drilling operation. The acceptance of the equipment by the Engineer in no way relieves the Contractor of the responsibility for difficulty or inability to successfully complete drilling and pullback operations or for damages of any nature that might occur as a result of the equipment used or of meeting the requirements of the Contract Documents, Plans or Specifications for this project.

   The Contractor's drilling equipment shall be equipped with an electrical strike system. The strike system shall be capable of indicating an electric strike by sensing both current and voltage. The strike system shall be equipped with warning strobes on both the drill frame and the power unit.

2. Methods and Work Plan – Include the anticipated location of all equipment on the project site including slurry containment pit, cuttings settlement pit, and layout requirements prior to pull back. Supply full details of the procedures and resources that will be employed to carry out the Work including method and sequence of drilling operations, conduit and duct assembly and installation, and emergency procedures. For drilling operations, include the number and size of construction crews, hours to be worked, pilot hole drilling procedure, reaming procedure, method of monitoring the drilling head, method of verifying conduit and duct location for As-Built Drawings and the schedule for completing major activities. Data to be provided regarding conduit and duct assembly and installation shall include the number and size of the construction crew, assembly procedure, joining procedure for conduit and ducts, and the

Provided to Builders Exchange of WA, Inc. For usage Conditions Agreement see www.bxwa.com - Always Verify Scale

installation/pullback procedure. Provide emergency procedures for dealing with blow holes or breakouts of drilling fluids and other types of problems that may be experienced during the Work.

The Contractor shall be responsible for obtaining, transporting and storing water associated with the conduit installation by HDB. The Contractor shall obtain any agreements or permits.

3. Company and Personnel – Names and resumes for all key personnel to be employed in the execution of this Work including supervisory and operation personnel. At a minimum this shall include the Project Engineer, drill operator, construction superintendent and/or foreman surveyor. Provide qualification documents for all Subcontractors including those supplying drilling assemblies, drilling fluids, guidance instrumentation, reaming equipment and cutters, slurry mixing tanks, and cuttings separation equipment.

4. Composition of the drilling fluid medium.

5. Location of disposal site and method of removing slurry and cuttings material.

6. Plan showing protection of traffic and pedestrians. The Contractor shall provide and maintain a safety fence around all Work and equipment areas.

7. The dimension of the pit

8. Provide shoring plan

Execution

The Contractor shall install steel casings as specified and shown in the Plans. Where boring with casing is called for, the casing shall be placed using an auger inside the casing to remove the soil as the casing is jacked forward. The auger head shall proceed no more than 4 inches ahead of the pipe being jacked. Boring operations shall be conducted to prevent caving ahead of the pipe. Installed casing pipe shall be free from grease, rock, dirt, rust, moisture and any other deleterious contaminants.

The space between the conduit and the casing shall be plugged with sand bags and a grout seal 12 inch thick at each end of the casing. Casings abandoned due to an encountered obstruction shall be grout sealed in the same manner. Grout shall conform to Section 9-20.3(4).

In lieu of sandbags and grout, unopened sacks of prepackaged concrete may be used to seal the casing.

Provided to Builders Exchange of WA, Inc. For usage Conditions Agreement see www.bxwa.com - Always Verify Scale

Material shall not be removed from the boring pit by washing or sluicing.

All joints shall be welded by a Washington State certified welder. Welding shall conform to AWS D 1.1-80 Structural Welding Code, Section 3, Workmanship.

Where directional boring is called for, conduit shall be installed using a surface-launched, steerable drilling tool. Drilling shall be accomplished using a high-pressure fluid jet tool head. The drilling fluid shall be used to maintain the stability of the tunnel, reduce drag on the conduit, and provide backfill between the conduit and tunnel. A guidance system that measures the depth, lateral position, and roll shall be used to guide the tool head when creating the pilot hole. Once the pilot hole is established, a reamer and swivel shall be used to install the conduit. Reaming diameter shall not exceed 1.5 times the diameter of the conduit being installed. Conduit that is being pulled into the tunnel shall be installed in such a manner that the conduit is not damaged during installation. The pullback force on the conduit shall be controlled to prevent damage to the conduit. A vacuum spoils extraction system shall be used to remove any excess spoils generated during the installation. Exceed drilling fluid and spoils shall be disposed of. The method and location used for disposal of exceed drilling fluid and spoils shall be subject to the Engineer's approval. Drilling fluid returns (caused by fracturing of formations) at locations other than the entry and exit points shall be minimized. Any drilling fluid that surfaces through fracturing shall be cleaned up immediately. Mobile spoils-removal equipment capable of quickly removing spoils from entry and exit pits and areas with returns caused by fracturing shall be used as necessary during the drilling operations.

Bore pits shall be backfilled and compacted in accordance with Section 2-09.3(1) E. Directional boring; and jacking or drilling pits shall be kept 2 feet from the edge of any type of pavement wherever possible. Excessive use of water that might undermine the pavement or soften the Subgrade will not be permitted.

When approved by the Engineer, small test holes may be cut in the pavement to locate obstructions. When the Contractor encounters obstructions or is unable to install conduit because of soil conditions, as determined by the Engineer, additional Work to place the conduit will be paid in accordance with Section 1-04.4.

The Contractor shall maintain and submit a complete set of project records. The entire length of the horizontal directional bore shall have a recorded profile based on a down-hole survey or a walkover location system. Maintain a daily activity log during horizontal directional boring operations. A copy of the log shall be submitted to the Engineer for record purposes on a daily basis. These documents shall include, but not be limited to, the following:

1. Start and finish time of each section of drill pipe for pilot hole drilling and reaming.

Provided to Builders Exchange of WA, Inc. For usage Conditions Agreement see www.bxwa.com - Always Verify Scale

2. For pilot hole drilling, provide drill bit location at least every 30 feet along the drill path. The Contractor shall mark the As-Built Drawings on a daily basis with drilling progress, complete with calculated x, y, z positions.
3. General description of ground conditions encountered along the drill path.
4. Details and perceived reasons for delays greater than one (1) hour other than normal breaks and shift changes.
5. Details of any unusual conditions or events.

Environmental Requirements

Waste cuttings and drilling mud shall be dewatered and dried by the Contractor to the extent necessary for disposal in offsite landfills.

"Blow holes" or "breakouts" of drilling fluid to the surface must be cleaned up immediately and the surface area washed and returned to original condition. All drilling fluids, spoils and separated material will be disposed of in compliance of local environmental regulations. If the amount of surface returns exceeds that which can be contained and collected using small sumps, drilling operations shall be discontinued until surface return volumes can be brought under control. Equipment and materials for cleanup and contingencies must be provided by the Contractor and stored on-site.

When approved by the Engineer, small test holes may be cut in the pavement to locate obstructions. When the Contractor encounters obstructions or is unable to install conduit because of soil conditions, as determined by the Engineer, additional Work to place the conduit will be paid in accordance with Section 1-04.4.

When open trenching is allowed, trench construction shall conform to the following:

1. The pavement shall be sawcut a minimum of 3 inches deep. The cuts shall be parallel to each other and extend 2 feet beyond the edge of the trench.
2. Pavement shall be removed in an approved manner.
3. Trench depth shall provide 2 feet minimum cover over conduits.
4. Trench width shall be 4 inches or the conduit diameter plus 2 inches, whichever is larger.
5. Trenches located within paved Roadway areas shall be backfilled with controlled density fill (CDF) meeting the requirements of Section 2-09.3(1)E. The controlled density fill shall be placed level to, and at the bottom of the existing pavement. The pavement shall be replaced with paving material that matches the existing pavement.

On new construction, conduit shall be placed prior to placement of base course pavement.

Provided to Builders Exchange of WA, Inc. For usage Conditions Agreement see www.bxwa.com - Always Verify Scale

Conduit terminating in foundations shall extend a maximum of 2 inches above the foundation vertically including grounded end bushing or end bell.

Galvanized rigid steel conduit entering cable vaults shall extend 2 inches for the installation of grounded end bushing and bonding. PVC or HDPE conduit entering cable vaults and pull boxes shall terminate flush with the inside walls of the Structure. All conduit ends shall be terminated with termination kits.

When conduit or casing is to be placed under pavement it shall be placed prior to the placement of a subbase, base, surfacing, and pavement.

Conduit entering through the bottom of a junction box shall be located near the end walls to leave the major portion of the box clear. At all outlets, conduit shall enter from the direction of the run, terminating 6 to 8 inches below the junction box lid and within 3 inches of the box wall nearest its entry location.

Steel conduit entering concrete shall be wrapped in 2-inch-wide pipe wrap tape with a minimum 1-inch overlap for 12 inches on each side of the concrete face. Pipe wrap tape shall be installed per the manufacturer's recommendations.

Interduct conduit ends shall be terminated with termination kits. Galvanized rigid steel conduit ends shall be terminated with grounded end bushings. PVC conduit ends shall be terminated with end bell bushings.

Fittings shall be installed in accordance with current electrical codes, all covered underground conduit shall be cleaned with an approved sized mandrel and blown out with compressed air prior to pulling wire.

Conduits installed for future use shall be prepared as follows: After final assembly in place, the conduit shall be blown clean with compressed air. Then, in the presence of the Engineer, a cleaning mandrel correctly sized for each size of conduit shall be pulled through to ensure that the conduit has not been deformed. As soon as the mandrel has been pulled through, both ends of the conduit shall be sealed with conduit caps. All conduits scheduled for future use shall originate in a foundation or junction box as detailed in the Plans and terminate in a junction box. All equipment grounding conductors, and the bonding conductor for metallic conduits, shall be bonded in all junction boxes in accordance with Section 8-20.3(9).

Where surface mounting of conduit is required, supports shall consist of channel with clamps sized for the conduit. Support spacing shall comply with the Code, with the exception that spacing of channel supports shall not exceed 5 feet.

Provided to Builders Exchange of WA, Inc. For usage Conditions Agreement see www.bxwa.com - Always Verify Scale

The minimum distance between clamps and between the clamp and the end of the channel supports shall be 1 inch. Channel supports shall be installed with stops, to prevent clamps from sliding out of the ends. Existing conduit in place scheduled to receive new conductors shall have any existing conductors removed and a cleaning mandrel sized for the conduit shall be pulled through.

All conduits attached to or routed within bridges, retaining walls, and other concrete Structures shall be equipped with approved expansion, deflection and/or combination expansion/deflection fittings at all expansion joints and at all other joints where Structure movement is anticipated, including locations where the Contractor, due to construction method, installs expansion and/or construction joints with movement. All conduit fittings shall have movement capacity appropriate for the anticipated movement of the Structure at the joint. Approved deflection fittings shall also be installed at the joint between the bridge end and the retaining wall end, and the transition from bridge, wall, or other concrete Structure to the underground section of conduit pipe. In addition to the expansion fittings installed at all expansion joints, when PVC conduit is installed, an additional expansion fitting shall be installed for each 100 feet of conduit. Fasteners shall be as approved by the Engineer.

Existing conduit in place scheduled to receive new conductors shall have any existing conductors removed and a cleaning mandrel sized for the conduit shall be pulled through.

Conduit runs shown in the Plans are for Bidding purposes only and may be changed, with approval of the Engineer, to avoid obstructions.

Where conduit with innerduct is installed, a maximum of 1000 feet of continuous open trench will be allowed unless otherwise approved by the Engineer. All conduit with innerduct exposed above grade level, or on any elevated Structures, or as noted in the Plans, shall be galvanized rigid steel conduit.

Detectable underground warning tape shall be placed 12 inches above all conduit that contains fiber optic cable and all conduits identified to contain future fiber optic cable unless otherwise detailed in the Plans. Detectable underground warning tape shall extend 2 feet into boxes. Splicing shall be per tape manufacturer's recommended materials and procedures. The warning tape shall be polyethylene with a metallic backing. The polyethylene shall have a minimum 4 mils thickness and be 3 inches wide. The polyethylene shall be orange in color and printed in black with the words "Fiber Optic Cable Buried Below."

Location wire, #14 AWG stranded orange USE insulated wire, shall be placed in continuous lengths directly above all nonmetallic conduit that contains fiber optic cable and all conduit identified to contain future fiber optic cable unless otherwise

Provided to Builders Exchange of WA, Inc. For usage Conditions Agreement see www.bxwa.com - Always Verify Scale

detailed in the Plans. Location wire shall extend 8 feet into boxes. Coil and secure location wire at the entrance and exit points of all boxes. Splices shall be crimped using a noninsulated butt splice, soldered and covered with moisture-blocking heat shrink. The 4-inch outerduct shall be placed to ensure correct consistency of alignment of the innerducts.

After final assembly in place, all innerducts shall be blown clean with compressed air. Then, in the presence of the Engineer, a cleaning mandrel, correctly sized for the innerduct, shall be pulled through to ensure that the conduit has not been deformed. As soon as the mandrel has been pulled through, a 200 pound minimum tensile strength pull string shall be installed in each innerduct and attached to duct plugs at both ends of the innerduct.

At all innerduct conduit terminus points, including those in cable vaults and pull boxes, removable and reusable mechanical plugs shall be employed as follows:

1. Outerduct conduits shall be plugged using a quadplex expansion plug inside the conduit around the innerduct.
2. Duct plugs shall be installed in all unused innerducts (those that are specified as empty) at the time of conduit installation.
3. Duct plugs shall be installed in all used innerducts (as specified in the Plans) at the time of conduit installation, unless cable pulling for those innerducts will commence within 48 hours.

Innerduct containing one (1) cable shall be plugged using an expandable split plug. Innerducts with multiple cables shall be sealed with self-expanding waterproof foam. The waterproof foam shall not be placed more than 2 inches into the innerduct.

Conduit sealing - Mechanical plugs for cabinet conduit sealing shall be one of the following:

1. Tyco Electronics – TDUX
2. Jackmoon – Triplex Duct Plugs
3. O-Z Gedney – Conduit Sealing Bushings

The mechanical plug shall withstand a minimum of 5 psi of pressure.

8-20.3(6) Junction Boxes, Cable Vaults, and Pull Boxes

(King County GSP)

DELETE this Section in its entirety and REPLACE with the following:

Standard junction boxes, pull boxes and cable vaults shall be installed at the locations shown in the Plans. The Contractor may install, at no expense to the Contracting

Provided to Builders Exchange of WA, Inc. For usage Conditions Agreement see www.bxwa.com - Always Verify Scale

Agency, such additional boxes as may be desired to facilitate the Work. Junction box installation shall conform to details in the WSDOT Standard Plans.

Unless otherwise noted in the Plans or approved by the Engineer, junction boxes, cable vaults and pull boxes shall not be placed within the Traveled Way. All junction boxes, cable vaults and pull boxes placed within the Traveled Way or paved Shoulders shall be heavy-duty.

All junction box lids and frames shall be grounded by means of a minimum No. 8 AWG braided tinned copper bonding jumper bolted to the lid with countersunk stainless steel bolts that will allow the removal of the junction box lid without breaking the ground.

Cable vaults and pull boxes shall be installed in accordance with the following:

1. Excavation shall be performed in accordance with Section 2-09.
2. Cable vaults and pull boxes shall be installed on 6 inches of crushed surfacing top course, per Section 9-03.9(3), placed on a compacted or undisturbed level foundation. If a cable vault or pull box is installed outside a paved area, an asphalt pad 2 inches thick and 6 inches wide shall be constructed around the perimeter of the junction box.
3. All openings around conduits shall be sealed and filled with grout in accordance with Sections 6-02.3(20) and 9-20.3(4) to prevent water and debris from entering the vaults or pull boxes.
4. Backfilling around the Work shall not be allowed until the concrete or mortar has set.
5. Pull boxes shall be installed in accordance with Plans and details.
6. Pull boxes shall be configured such that the tensile and bending limitations of the fiber optic cable are not compromised. Pull boxes shall be configured to mechanically protect the fiber optic and other cables against installation force as well as inert forces after cable pulling operations.
7. Upon acceptance of Work, cable vaults, and pull boxes shall be free of debris and ready for cable installation. All grounding requirements shall be met prior to cable installation.
8. Where installed near steel casings, the pull boxes and cable vaults shall be offset 3 feet minimum from the centerline of the casing. Factory bends shall be used to route the conduits to the cable vault or pull box.

Adjustments involving raising or lowering the junction boxes shall require conduit modification if the resultant clearance between the top of the conduit and the junction box lid becomes less than 6 inches or more than 10 inches in accordance with WSDOT Standard Plans J-40.10-03 and J-40.30-03.

Provided to Builders Exchange of WA, Inc. For usage Conditions Agreement see www.bxwa.com - Always Verify Scale

Cable vaults and pull boxes shall be adjusted to final grade using risers or rings manufactured by the cable vault and pull box manufacturer. Cable vaults and pull boxes with traffic bearing lids shall be raised to final grade using ring risers to raise the cover only. All voids resulting from the adjustment shall be backfilled with materials matching adjacent surfacing material and compacted in accordance with Section 2-09.3(1)E.

Damage to the junction boxes, pull boxes, cable vaults and the associated conduit system, or wiring resulting from the Contractor's operations, shall be repaired to the Engineer's satisfaction at no additional cost to the Contracting Agency.

Both existing and new junction boxes, pull boxes, and cable vaults shall be adjusted to be flush with the finished grade as well as with the grade during the various construction stages proposed in the Contract.

Where conduit and junction boxes are placed in barrier, the Prime Contractor shall coordinate the Work of the Contractor constructing the barrier and the Electrical Contractor so that each junction box placed in the barrier is placed in correct alignment with respect to the barrier, with the face of the box flush or uniformly chamfered within 1/8 inch of the barrier surface. If any point on the surface of the junction box placed in barrier is recessed more than 1/8 inch from the surface of the barrier, the Contractor shall install a box extension meeting the Engineer's approval and grout around the extension or remove and replace the entire section of barrier.

Standard Duty pull boxes, cable vaults, and concrete junction boxes installed in sidewalks, walkways, and shared-use paths shall have slip-resistant surfaces, be flush with the surface, and match the grade of the sidewalk, walkway, and shared-use path. The boxes, vaults and junction boxes shall not be placed in curb ramps, curb ramp landings, or the gutter areas associated with curb ramps. Standard Duty nonconcrete junction boxes shall not be installed in sidewalks, walkways, or shared-use paths.

Wiring shall not be pulled into any conduit until all associated junction boxes have been adjusted to, or installed in, their final grade and location, unless installation is necessary to maintain system operation. If wire is installed for this reason, sufficient slack shall be left to allow for future adjustment.

When junction boxes, cable vaults and pull boxes are installed or adjusted prior to construction of finished grade, pre-molded joint filler for expansion joints may be placed around the junction boxes, cable vaults and pull boxes. The joint filler shall be removed prior to adjustment to the finished grade.

Adjustments involving raising or lowering the junction boxes shall require conduit modification if the resultant clearance between the top of the conduit and the junction

Provided to Builders Exchange of WA, Inc. For usage Conditions Agreement see www.bxwa.com - Always Verify Scale

box lid becomes less than 6 inches or more than 10 inches. Wiring shall be replaced if sufficient slack is not maintained.

The 6-inch gravel pad required in Standard Plans J-40.10-03 and J-40.30-03 shall be maintained. When existing junction boxes do not have this gravel pad, it shall be installed as part of the adjustment or finished grade.

Where conduit and junction boxes are placed in barrier, the Prime Contractor shall coordinate the Work of the Contractor constructing the barrier and the Electrical Contractor so that each junction box placed in the barrier is placed in correct alignment with respect to the barrier, with the face of the box flush. The junction box shall be parallel to the top of the barrier within a 1-degree tolerance.

Heavy-Duty Type 4, 5 and 6 junction boxes, cable vaults and pull boxes shall be installed in accordance with the following:

1. Excavation and backfill shall be in accordance with Section 2-09. Excavation for junction boxes, cable vaults and pull boxes shall be sufficient to leave one (1) foot in the clear between the outer surface and the earth bank.

   Junction boxes, cable vaults and pull boxes shall be installed on a level 6-inch layer of crushed surfacing top course, in accordance with Section 9-03.9(3), placed on a compacted or undisturbed foundation. The crushed surfacing shall be compacted in accordance with Section 2-09.3(1)E.
2. After installation, the lid/cover shall be kept bolted down during periods when Work is not actively in progress at the junction box, cable vault or pull box.
3. Before closing the lid/cover, the lid/cover and the frame/ring shall be thoroughly brushed and cleaned of all debris. There shall be absolutely no visible dirt, sand or other foreign matter between the bearing surfaces.
4. When the lid/cover is closed for the final time, a liberal coating of anti-seize compound shall be applied to the bolts and nuts and the lid shall be securely tightened.
5. Hinges on the Type 4, 5 and 6 junction boxes shall be located on the side of the box which is nearest to the adjacent Shoulder. Hinges shall allow the lid to open 180 degrees.

8-20.3(8) Wiring

(King County GSP)

SUPPLEMENT this Section with the following:

Wire Labels: At each junction box, all illumination wires, power supply wires and communication cable shall be labeled with a PVC marking sleeve. For illumination

Provided to Builders Exchange of WA, Inc. For usage Conditions Agreement see www.bxwa.com - Always Verify Scale

and power supply circuits the sleeve shall bear the circuit number. For communications cable the sleeve shall be marked "Comm."

8-20.3(9) Bonding, Grounding

(King County GSP)

The first paragraph of this Section is DELETED and REPLACED with the following:

All metallic appurtenances containing electrical conductors (luminaires, light standards, cabinets, metallic conduit, non-metallic conduit, etc.) shall be made mechanically and electrically secure to form a continuous system that shall be effectively grounded. Where metallic conduit systems are employed, the conduit system constitutes the equipment grounding conductor. Where non-metallic conduit is installed, the installation shall include an equipment ground conductor, in addition to the conductors noted in the Contract. Except as noted below for sign lighting fixtures, bonding jumpers and equipment grounding conductors shall be installed in accordance with Section 9-29.3, and sized per NEC 250-122. The equipment ground conductor between the isolation switch and the sign lighter fixtures may be No. 14 AWG stranded copper conductor. Where parallel circuits are enclosed in a common conduit, the equipment grounding conductor shall be sized by the largest overcurrent device serving any circuit contained within the conduit.

(King County GSP)

SUPPLEMENT this Section with the following:

Where conductors are adjusted in size to compensate for voltage drop, equipment grounding conductors shall be adjusted proportionately according to circular mil area in compliance with NEC 250-122(b).

The grounding electrode system shall consist of a ground ring and shall be 25 ohms or less impedance. The ground ring shall be placed in contact with the earth at a depth of 2.5 feet or more and consist of bare copper conductor not smaller than No. 2. The grounding electrode system shall be tested with a ground rod tester in the presence of the Electrical Inspector prior to activating the service.

Where existing junction boxes in a system that is being modified are ungrounded, the metal frame and lid shall be grounded to the existing equipment grounding system. The existing equipment ground system shall be derived from the service serving the raceway system of which the existing junction box is a part.

8-20.4 Measurement

SUPPLEMENT this Section with the following:

(******)

Provided to Builders Exchange of WA, Inc. For usage Conditions Agreement see www.bxwa.com - Always Verify Scale

When the following is shown as lump sum in the Plans or in the Proposal, no specific unit of measurement will apply, but measurement will be for the sum total of all items for a complete system to be furnished and installed.

"Illumination System Complete"

(April 2015 KENMORE GSP)

8-20.5 Payment

SUPPLEMENT this Section with the following:

Payment for adjusting electrical and telecommunication/cable vaults and coordinating Work with all utilities shall be incidental to the various Bid items, no separate payment item is provided.

The lump sum Contract price for each of the following items shall be full pay for the construction of the complete electrical system, modifying existing systems, or both, including sign lighting systems, as described below and as shown in the Plans and herein specified including excavation, backfilling concrete foundations, conduit, wiring, restoring facilities destroyed or damaged during construction, salvaging existing materials, and for making all required tests. All additional materials and labor, not shown in the Plans or called for herein and which are required to complete the electrical systems, shall be included in the lump sum Contract price.

"Illumination System Complete", lump sum.

NEW Section:

(******)

8-37 Utility Undergrounding

8-37.1 Description

This Work consists of furnishing and installing conduit, conduit risers, handholes, junction boxes, vaults and cabinet foundations for the conversion of overhead utilities to underground facilities and the conversion of public and private services as shown in the Plans. Using the information shown in the Plans and per the Specifications of Section 1-07.17 the Contractor shall coordinate closely with each utility company to develop a detailed Trench Excavation Plan and sequence of construction to perform the following:

Provided to Builders Exchange of WA, Inc. For usage Conditions Agreement see www.bxwa.com - Always Verify Scale

1. Saw cut pavement as required, excavate trenches, and shore trenches and support existing power poles where required for underground facilities for Puget Sound Energy (PSE), Comcast, and Frontier.

2. Comcast, Frontier, and PSE (with the exception of the PSE residential services) shall furnish conduit, conduit bends, required fittings and connections, handholes and vaults for installation by the Contractor. Comcast, Frontier, and PSE (with the exception of the PSE residential services) will furnish and install cable, conductors, pole risers, weatherheads, and equipment for their systems. For the PSE residential services furnish and install conduit, pole rise, and weatherhead.

3. Furnish, place and compact conduit bedding (gravel backfill for pipe zone bedding).

4. Furnish and install identification tape.

5. Furnish, place and compact backfill (gravel backfill for trench) for trenches and Structure excavations associated with undergrounding of overhead utilities. When approved by the Engineer native material may be used as a substitute for gravel backfill for trench as backfill for trenches and Structure excavation. Per Section 1-04.4, the Contracting Agency will consider a cost reduction incentive proposal for use of native material backfill in lieu of structural material backfill.

6. The Contractor will coordinate with PSE safety crews all Work involved with connecting to existing electrified vaults. The Contractor will notify PSE a minimum of two (2) weeks prior to beginning of Work for connection to an existing electrified vault. PSE will make all connections to existing electrified vaults.

7. Installing grounding electrode system, ground rods, ground plates, conduit risers and other electrical hardware per PSE Electric Distribution Trench/Duct/Vault Construction Standards, as required by the Plans and Specifications.

8. Installing conduits as needed to provide PSE, Comcast and Frontier service conduits to individual properties converting to underground services where indicated in the Plans.

9. Cutting and capping conduit.

10. Cleaning of Structures and conduit, proof testing the conduit with a mandrel, and installing pulling rope and conduit caps/plugs.

11. Coordinating with the Engineer and the non-electrical utility crews (gas, sewer, water, etc) to avoid conflicts, damage and Work stoppages.

Provided to Builders Exchange of WA, Inc. For usage Conditions Agreement see www.bxwa.com - Always Verify Scale

12. Other Work indicated in the Plans and in the Specifications.

Puget Sound Energy (PSE), Comcast, and Frontier shall be responsible for the following:

1. Provide all new underground wiring and cable to the service termination location. PSE service termination locations are assumed to be existing meter boxes or existing handholes unless noted otherwise in the Plans.

2. Provide all electrical equipment, communication equipment, and all distribution and service termination, except as required for signal and lighting systems as specified in Section 9-29.

3. Provide required grounding connections to their respective electrical equipment.

4. Provide inspections for all underground facilities constructed by the Contractor prior to burial.

5. Traffic control labor for utility's respective wiring operations, if that Work occurs outside of the Contractor's staging.

6. Comcast and Frontier shall provide additional conduit, reducers, J-boxes, conduit terminations, and wiring at individual building's service connections.

7. Provide service shutdowns and cutovers.

8. Provide supervision and crews to make cutovers to existing conduits and vaults.

9. PSE shall pull the service conductors from the vault to the new meter box, weatherhead or to termination handhole, provide the meter, and make the terminations to the vault transformer.

10. PSE, Comcast and Frontier to provide temporary pole relocations and temporary wiring, as required. The Contractor is required to provide notification to utilities a minimum of two (2) weeks prior to temporary pole relocations or temporary wiring installation. Comcast and Frontier to provide temporary wiring, as required, for temporary pole locations.

11. PSE, Comcast and Frontier shall provide all conduit, conduit bends, required fittings and connections, risers, and vaults for construction of their facilities.

Regulations and Code

Provided to Builders Exchange of WA, Inc. For usage Conditions Agreement see www.bxwa.com - Always Verify Scale

Installation of all electrical and telecommunication vaults and ducts shall conform to the appropriate sections of the latest edition of the following standards and codes (**the more stringent standard shall apply in case of discrepancies**):

National Electrical Code (Code)
National Electric Safety Code (NESC)
City of Kenmore Building Code
Puget Sound Energy Standards for Duct and Vault Installation
Underwriters Laboratories (UL)
National Electrical Manufacturer's Association (NEMA)
American Association of State Highway and Transportation Officials (AASHTO)
National Electrical Contractors Association (NECA)
Standards of the utility companies

In all cases, the Contractor shall install a complete and functional system in compliance with these Plans and Specifications and to the satisfaction of the Engineer. The Contractor shall also coordinate and obtain inspections and approvals from the various utilities, Project Engineer, and from the local Authorities Having Jurisdiction (AHJ) prior to duct and vault burial.

See Section 1-07.17 for other requirements.

8-37.2 Materials

Materials shall meet the requirements of Section 9-29 of these Special Provisions and the standards of the utility agencies (PSE, COMCAST, and Frontier) as indicated in the Plans and in these Specifications.

PSE, Frontier and Comcast will provide the materials for their portion of the bare conduit and vault system.

Vaults and Handholes
The vaults, junction boxes, and handholes required by the utilities and the Contracting Agency shall adhere to the requirements found in the Plans and Specifications.

PSE Vaults, Handholes, and Lids
Vault and handhole sizes are identified in the Plans. Vaults and handholes shall be installed per PSE Standards. All covers shall be AASHTO H20-rated, unless otherwise approved by the Project Engineer and PSE.

Identification Tap
Polyethylene, 5 Mil Tape, with 1/2 Mil Aluminum Center Core

Provided to Builders Exchange of WA, Inc. For usage Conditions Agreement see www.bxwa.com - Always Verify Scale

Electrical – Six inch (6") wide, red in color, with non-ferrous metal conductor sandwiched in the tape for detection purposes, imprinted with black lettering "CAUTION – ELECTRIC UTILITIES BELOW".

Telecommunications – Six inch (6") wide, orange in color, with 1 non-ferrous metal conductor sandwiched in the tape for detection purposes, imprinted with black lettering "CAUTION – COMMUNICATION LINE BELOW".

Utility Trench Bedding Materials

Gravel Backfill for Pipe Zone Bedding	9-03.12(3)

Utility Trench Pipe Zone Bedding Materials

Gravel Backfill for Pipe Zone Bedding	9-03.12(3)

Utility Trench Backfill Materials

Bank Run Gravel for Trench Backfill	9-03.19

8-37.3 Construction Requirements

Construction requirements for this Work shall conform to PSE Electric Distribution Trench/Duct/Vault Construction Standards.

The Contractor shall be responsible for coordinating with the utility companies and incorporate time allowances into the project schedule for these Work elements.

The Plans are intended to provide an overview of the Work and for Bidding purposes. It shall be Contractor's responsibility to construct a joint trench along the approximate lines and grades shown which shall result in a successful conversion of the aerial utilities to underground.

The Contractor is advised that the horizontal and vertical layout of conduit ducts and vaults shown in the Plans is approximate. The layout of the joint utility trench and vaults shall be adjusted as necessary to avoid conflicts with utilities, signal pole foundations and equipment, and street light poles, foundations and equipment, both existing and to be constructed under this Contract. The Contractor is also alerted that all improvements for the aerial utility conversion must remain within Contracting Agency-obtained easements, which are indicated in the Plans.

It shall be the Contractor's responsibility to construct the joint utility trench so that it will not require adjustments or replacements for other items of Work. All adjustments to the layout shown must be reviewed and approved by the Engineer. The Contractor shall make

Provided to Builders Exchange of WA, Inc. For usage Conditions Agreement see www.bxwa.com - Always Verify Scale

its own determination as to how best to provide the joint utility trench, which conforms with these Plans and Specifications.

The Engineer, utility company representatives, and the Contractor shall coordinate actual location of vaults, handholes, and conduits as necessary to avoid conflicts with the existing and proposed utilities and appurtenances. The Contracting Agency reserves the right to adjust these locations as necessary to accommodate existing or newly installed utilities at no additional cost to the Contracting Agency.

Installation of utility conduits shall be per the requirements of the utilities. The Contractor shall perform all utility Work under the supervision and inspection of the utility representatives.

Core drilling for existing vaults, vaults, handholes, and walls shall be incidental to the vault, handholes, and or conduit.

For PSE facilities: All vaults and conduits must be inspected by a PSE Inspector before covering. Phone Josh Grenner at 253.606.4745, a minimum of 48 hours in advance of setting the vault to schedule a Field Engineer to observe the setting. No vault inspection will be made unless the shoring for the vault excavation complies with WAC 296-155, Part N "Excavation, Trenching and Shoring".

The Contractor is required to perform a thorough review and assessment of Plans, Specifications, Special Provisions, Utility Standards, Utility Agreements, site conditions, and constraints to determine the Work necessary to construct and complete the utility undergrounding. Work shall be performed in close proximity to other underground utilities and beneath existing overhead utilities, and must be coordinated with the various utility representatives and Work crews to prevent damage and safety hazards.

Excavation and Backfilling

The excavation and disposal of all natural material or man-made objects required for installation of conduit, vaults, handholes, and other required facilities as shown in the Plans shall be performed per the following Specifications for Structure Excavation Class B. The Contractor shall exercise sound engineering and construction practices in excavating the trench and maintaining the trench so that no damage will occur to any pavement, sidewalk, foundation, Structure, pole line, pipe line or other facility because of slough or slopes, or other cause. If, as a result of excavation, there is disturbance of the ground, which may endanger other property, the Contractor shall immediately take remedial action at no additional expense to the Contracting Agency. No act, representation, or instruction of the Engineer shall in any way relieve the Contractor from liability for damages or costs that result from trench excavation.

Provided to Builders Exchange of WA, Inc. For usage Conditions Agreement see www.bxwa.com - Always Verify Scale

The trenches for conduit installation shall be excavated to the widths shown in the Plans. Excavation for vaults shall be at least 24 inches and not more than 30 inches outside the perimeter of the Structure. Excavation for handholes shall be not more than 12 inches outside the perimeter of the Structure. Excavation shall not be performed until immediately before installation of conduit and associated Structures. The material from the excavation shall be placed where the least interference with vehicular and pedestrian traffic, and surface drainage, will occur.

If unstable base material is encountered at the bottom of excavations for vaults and handholes, it shall be removed and replaced per Section 2-09.3(1)C.

If workers have to enter any trench or other excavation 4-feet or more in depth that does not meet the open pit requirements of Section 2-09.3(3)B, it shall be shored. The Contractor alone shall be responsible for worker safety, and the Contracting Agency assumes no responsibility.

All excavated native material approved for use as backfill shall be stockpiled and protected with plastic sheeting or by some other method from contamination and weather damage. If the material becomes wet or contaminated in the stockpile, the Contractor shall dispose of it at no expense to the Contracting Agency.

All surplus excavated material shall be removed and disposed of off the project by the Contractor in accordance with Section 2-03.3(7)C or as directed by the Engineer. The unit Contract price for the conduit installation shall include all costs for disposal fees, loading and hauling the surplus material.

Excavation areas after backfilling shall be maintained in a smooth well drained condition until permanent surfacing and paving or sidewalk have been completed.

At the end of each day's Work and at all other times when construction operations are suspended, all equipment and other obstructions shall be removed from that portion of the Roadway open for use by public traffic.

Excavation in the street or Highway shall be performed in such a manner that it complies with the lane closure limitations shown in the Traffic Control Plans and specified in the Contract Provisions.

Backfill for pipe (conduit) zone bedding shall be as identified in the Plans.

Backfill material above the pipe (conduit) zone shall be as identified in the Plans.

Compaction

Compaction of the trench backfill materials shall be in accordance with Section 2-09.3(1)E of the Standard Specifications.

Provided to Builders Exchange of WA, Inc. For usage Conditions Agreement see www.bxwa.com - Always Verify Scale

Backfill material around PSE vaults and handholes shall consist of good compactible material such as crushed rock, CDF or sand.

Backfill material around Frontier and Comcast vaults shall be Gravel Borrow Backfill Including Haul.

Dewatering of Trench

Where water is encountered in the trench, it shall be removed during vault, handhole and conduit placement operations and the trench so maintained until specified backfill has been placed around these facilities.

Removing and Replacing Improvements

Removing and replacing improvements shall be done as specified in Section 8-20.3(3).

Temporary Pole Supports

The Contractor shall coordinate any temporary pole supports to existing power poles that are adversely affected by adjacent excavations and Work with the pole owner. Pole owners must be notified 30 calendar days prior to any utility trench excavation within five (5) feet of the pole.

Reconnecting Electrical Service

Puget Sound Energy shall be responsible for reconnecting electrical services, including providing all necessary materials and scheduling outages with property owners.

Restoration of private property shall be as directed by the Engineer to match approximate existing conditions.

Conduit

Installation of conduit shall conform to appropriate articles of the Code, PSE Schedule 74 Construction Standards and these Specifications. Installation of conduit spacers shall be incidental to the conduit.

The size of conduit shall be as shown in the Plans.

PVC conduit shall be assembled with solvent welded joints in accordance with the manufacturer's written instructions. Bends and fittings shall be factory-produced.

The ends of all conduits shall be chamfered at 45 degrees and reamed to remove burrs and rough edges. Field cuts to conduit ends must be made square and true.

Conduit stubs from bases shall extend at least six (6) inches from the vertical face of the foundations and at least eighteen (18) inches below grade. Conduit stub-ups into

Provided to Builders Exchange of WA, Inc. For usage Conditions Agreement see www.bxwa.com - Always Verify Scale

bottomless handholes and equipment foundations shall extend a minimum of four (4) inches above the bottom surface/grade. All conduit stubs shall be capped.

Conduit pole risers shall be provided and installed by PSE, Comcast, or Frontier.

Service risers shall be provided and installed by Comcast or Frontier.

Suitable marker stakes shall be set at the ends of conduits which are buried so that they can be easily located.

After final assembly in place, the conduit shall be cleaned, mandrelled, pulling rope installed, and plugged per PSE requirements. Mandrelling shall be performed in the presence of the PSE Inspector. PSE safety crew must be present when cleaning and mandrelling conduits connected to an energized vault.

Connection, interception, and/or extension of existing conduits shall be coordinated with the crews of the pertinent utility.

Conduit shall be laid to depth as per PSE standard 6790.0075 Customer-Supplied Trench Requirements.

When open trenching is allowed, trench construction shall conform to the following:

1. The pavement shall be saw cut full depth. The cuts shall be parallel to each other and extend two (2) feet beyond the edge of the trench on each side.

2. Pavement shall be removed in an approved manor which minimizes damage to surrounding pavement.

3. Trench width shall be as shown in the details of the Plans. Trenches shall be formed to minimize over-pour of bedding and backfill material.

4. All trenches shall be closed up or plated over at the end of the day.

On new construction, conduit shall be placed prior to placement of the surfacing and pavement.

Conduit terminating in foundations shall extend a maximum of two (2) inches above the foundation vertically.

Conduit runs shown in the Plans are for Bidding purposes only and may be changed to avoid underground obstructions with approval of the Engineer.

Duct Bank Terminations

Provided to Builders Exchange of WA, Inc. For usage Conditions Agreement see www.bxwa.com - Always Verify Scale

Duct banks and conduits shall enter the manhole or vault at the location and elevation shown in the Plans. When duct banks or conduits enter perpendicular to each other at a corner of a ring or panel vault, they shall enter at different elevations as shown in the Plans or as approved by the Engineer. Deviation from the duct bank entrance shown in the Plans shall be approved in writing by the Engineer.

Unless otherwise indicated in the Plans, all ducts and conduits shall be end belled, **square and flush** with the recessed wall of the duct window.

Annular spaces around conduit, ground wire and rods, picking eyes, ducts at wall penetrations of ring or panel vault or other structural walls shall be filled with non-shrink cement sand grout, and finished smooth and flush with interior walls.

Temporary Terminations

Duct banks and conduits terminating for a short duration of time, 48 hours or less, away from ring or panel vaults, at the end of a day's operation or during Work suspension shall not be cut. A duct plug shall be installed into each exposed conduit end and shall be covered in a manner to protect the installation from damage or intrusion of foreign material.

Vaults, Handholes and Appurtenances

Vaults, handholes, and other appurtenances shall be installed at the locations shown in the Plans. Vault and handhole installation shall conform to the respective utility company's standards as contained in these Plans and Specifications. Vaults and handholes shall be adjusted such that the covers are 1/4" to 3/8" above the finished grade outside of paved areas. In all sidewalk sections the vaults and handholes shall be flush with the finished grade. See PSE standard 6775.0035 Vault, Handhole, and Padmounted Equipment Location.

When required by the Plans, handhole extension shall be provided and installed.

Unused conduit openings in handholes shall be capped to afford protection against debris from entering the conduits.

Telecommunications Service Connections

In the course of the Work, Frontier and Comcast will reconnect services to private properties which are currently overhead. The Contractor shall provide trenching, bedding, backfill and restoration as needed to reconnect the service. These service connections shall be constructed in the locations and per the details shown in the Plans.

Existing Utilities

The Contractor is alerted to the presence of existing underground utilities within the project area. The Plans indicate approximate horizontal and vertical locations of these

Provided to Builders Exchange of WA, Inc. For usage Conditions Agreement see www.bxwa.com - Always Verify Scale

utilities; however it is the responsibility of the Contractor to verify the locations prior to excavation.

The Contractor shall prepare, and submit to the Engineer, a Trench Excavation Plan that indicates the horizontal and vertical location of the existing utilities within the trench and vault excavation areas. The vertical location of the existing utilities shall be based on potholing information obtained by the Contractor.

Conflicts between existing utilities and new conduit, vaults, handholes, junction boxes and appurtenances shall be shown in the Trench Excavation Plan. The Contractor shall identify those conflicts requiring immediate resolution based on the CPM schedule and request in writing to the Engineer authorization to resolve those conflicts per the supplement to Section 1-04.4 ***Unexpected Site Changes*** in these Contract Provisions.

Upon authorization, the Contractor shall diligently and without delay perform such Work as necessary to resolve the conflicts. An adjustment to the Contract time will be made based on the actual time expended resolving said conflicts.

In the event that additional utility conflicts are encountered during the construction of the underground utility system, such conflicts will be resolved per the supplement to Section 1-04.4 ***Unexpected Site Changes***.

All Engineer directed Work necessary to resolve conflicts with existing utilities not identified in the Plans will be paid for by the item "Unexpected Site Changes", by force account and/or by other item unit Bid prices associated with the Work.

The Contractor shall protect and support all existing utilities not identified to be removed, relocated or abandoned. The existing telecommunication and electrical system shall remain operational during the installation of the underground utility system. The respective utility companies will furnish and install all conductors and make all final connections necessary to energize the systems.

Removal of the existing utility poles shall be performed by the owner of the pole, following energizing of the underground system.

Adjustment of Existing Utility Vaults

The Engineer will establish approximate grade elevation for the tops of existing utility Structures requiring adjustment. The final alignment and grade elevation shall be established from adjacent Roadway surfaces, forms, or such offset hubs as may be provided by the Engineer.

Except where adjustment is to be made by ring extension, the Contractor shall remove the pavement around the casting; remove the casting and install or remove leveling or adjustment brick or block; or shall excavate around the utility Structure, remove a portion

Provided to Builders Exchange of WA, Inc. For usage Conditions Agreement see www.bxwa.com - Always Verify Scale

of it as necessary and rebuild the Structure to meet the new grade elevation. Pavement removal shall be kept to the minimum amount required to facilitate the adjustment.

When a ring extension is specified in the Contract, it shall be epoxied securely to the existing frame. All frame and ring extension surfaces to receive the epoxy shall be thoroughly cleaned with a wire brush prior to the application of epoxy.

When adjustment is made by adding or removing leveling bricks, all joints in the bricks shall be filled with mortar and the casting seated in mortar on the top brick course.

After the utility Structure has been adjusted to grade, and the Structure made watertight by plastering with a mortar cement, all voids around the Structure shall be backfilled and compacted with Gravel Borrow Including Haul. The casting shall then be secured in place with a tapered layer of concrete or asphalt, as applicable.

8-37.4 Measurement

The quantity of the following items for construction of utility undergrounding raceway system shall be paid per Plan quantity, unless changes are made in accordance with Section 1-04.4 which affect this quantity. The quantity shown in the Plans will be adjusted by the amount of the change and will be paid for as specified in Section 1-04.4.

Utility Conduit (Utility supplied and Contractor installed) of the kind and diameter specified in the Plans will be measured by the linear foot for the actual neat line length in place. This measurement shall include all conduit including bends and risers.

"___ Conduit, __ In. Diam. - Install" will be measured by the linear foot.

Utility Conduit (Contractor supplied and installed) of the kind and diameter specified in the Plans will be measured by the linear foot for the actual neat line length in place. This measurement shall include all conduit including bends and risers.

"___ Conduit, __ In. Diam. – Furnish and Install" will be measured by the linear foot.

Utility Conduit Riser (Contractor supplied and installed) of the kind and diameter specified in the Plans will be measured per each.

"___ Conduit, __ In. Diam. Riser – Furnish and Install" will be measured per each.

Fiberglass handholes (Utility supplied and Contractor installed) will be measured per each.

Precast vaults (Utility supplied and Contractor installed) will be measured per each.

Provided to Builders Exchange of WA, Inc. For usage Conditions Agreement see www.bxwa.com - Always Verify Scale

Adjust Utility Vault will be measured per each.

8-37.5 Payment

Payment will be made in accordance with Section 1-04.1, for each of the following Bid items that are included in the Proposal:

Payment for reconstruction of surfacing and paving within the limits of trench excavation will be at the applicable unit prices for the items involved.

"___ Conduit ___ In. Diam. – Install", per linear foot.
The unit Contract price per linear foot for "___Conduit ___ In. Diam. – Install" shall be full pay for installing Utility-supplied conduit including excavation of the joint utility trench and haul, bedding, dewatering, all conduit pipe, pipe connections, sweeps, elbows, bends, risers, caps, reducers, unions, spacers, any other fittings necessary, and installation of identification tape, perform mandrel testing of all installed conduit, and installation of pulling rope, all to provide a complete conduit raceway system and service connections in accordance with the Plans and Specifications.

"PSE Conduit 3 In. Diam. – Furnish and Install", per linear foot.
The unit Contract price per linear foot for "PSE Conduit 3 In. Diam. – Furnish and Install" shall be full pay for furnishing and installing conduit including excavation of the joint utility trench and haul, bedding, dewatering, all conduit pipe, pipe connections, sweeps, elbows, bends, risers, caps, reducers, unions, spacers, any other fittings necessary, and installation of identification tape, perform mandrel testing of all installed conduit, and installation of pulling rope, all to provide a complete conduit raceway system and service connections in accordance with the Plans and Specifications.

"PSE Conduit 3 In. Diam. Riser – Furnish and Install", per each.
The unit Contract price per each for "PSE Conduit 3 In. Diam. Riser – Furnish and Install" shall be full pay for furnishing and installing the conduit riser in accordance with the Plans and Specifications.

"____ Precast Vault – Install", per each.
The unit Contract price per each for "____ Precast Vault – Install" shall include all costs to install Utility-supplied precast vault including excavation and haul, backfill and compaction, adjustment, and ground rods all as necessary to provide a complete raceway system in accordance with the Plans and Specifications.

"PSE Fiberglass Handhole – Install", per each.
The unit Contract price per each for "PSE Fiberglass Handhole – Install" shall include all costs to install Utility-supplied fiberglass handhole including excavation and haul, backfill and compaction, adjustment, ground rod, and handhole extensions when required.

Provided to Builders Exchange of WA, Inc. For usage Conditions Agreement see www.bxwa.com - Always Verify Scale

"Adjust Utility Vault", per each.

The unit Contract price per each for "Adjust Utility Vault" shall be full pay for all Work needed to adjust the existing vault to grade, including the addition or removal of adjustment rings or bricks, mortar, backfill and compaction.

END OF DIVISION 8

Provided to Builders Exchange of WA, Inc. For usage Conditions Agreement see www.bxwa.com - Always Verify Scale

DIVISION 9
MATERIALS

9-14 EROSION CONTROL AND ROADSIDE PLANTING

9-14.1 Soil

9-14.1(1) Topsoil Type A

(April 2015 KENMORE GSP)

SUPPLEMENT this Section with the following:

Topsoil Type "A" mix shall be a mixture of compost and sand.

Fine compost shall comply with requirements of 9-14.4(8).

Sand shall be "Washed Building Sand" and meet the following chemical and mechanical analysis:

Size	Sieve	Percent Passing
No.4	ASTM E-11	100
No. 270	ASTM E-11	0-2

Permissible Range:

Soluble Salts, dS/m (mmohms/cm):	4.0 Max
Organic matter content (% dry weight base):	40% Min
Maximum particle length:	4 inches

Topsoil Type "A" shall be a two-way mix soil consisting of forty (40) percent sand and sixty (60) percent compost by volume, thoroughly mixed together. Mixed soil shall have pH range of 5.0 to 7.0 with dolomite limestone added as necessary to attain this range. All soil must be analyzed and certified. Certified test results must state that the soil is recommended for ornamental plant growth. Certification documentation must be submitted to the Engineer.

A certified test report from the supplier shall be acceptable.

If certified test report is not available from the supplier, the Contractor shall send minimum of one (1) representative sample of MIXED SOIL to an approved soil-testing laboratory (state or commercial laboratory) to determine FERTILITY ANALYSIS (to determine magnesium, nitrogen, potassium, phosphorus levels, calcium, minor

Provided to Builders Exchange of WA, Inc. For usage Conditions Agreement see www.bxwa.com - Always Verify Scale

elements, soluble salts/conductivity and pH). The Contractor shall be responsible for whatever soil additives may be required, as recommended by the testing laboratory.

9-14.8 Root Barrier

(April 2015 KENMORE GSP)

NEW Section:

Root barriers shall be injection molded, 50% post-consumer recycled plastic, minimum twelve (12) inch wide and eighteen (18) inch high panels with ½" raised 90% molded root deflecting ribs, and meet or exceed the following criteria:

Test	ASTM Test Method	Value Copolymer Polyporpylene
Tensile Stress @ yield	D638	3800 PS
Elongation @ yield	D638	6.3%
Flexural Modulus	D790B	150,000 PSI
Notched Izod Impact	D256A	7.1
Rockwell Hardness r. scale	D785A	68

NEW Section:

9-37 DETECTABLE WARNING SURFACE

(April 2015 KENMORE GSP)

9-37.1 General

Detectable Warning Surface shall be installed per manufacturer's Specifications and meet or exceed the following criteria:

- Tiles shall be composed of a polymer material. Concrete, ceramic, metal, or masonry tiles shall not be used.
- Tiles shall be 24"x24" or 24"x48".
- Color: yellow throughout, surface coating only will not be allowed.
- Tiles shall be cast in place and shall not be surface mounted.

END OF DIVISION 9

Provided to Builders Exchange of WA, Inc. For usage Conditions Agreement see www.bxwa.com - Always Verify Scale

VII. STANDARD PLANS

Provided to Builders Exchange of WA, Inc. For usage Conditions Agreement see www.bxwa.com - Always Verify Scale

DRAWN BY: ADAM COCHRAN

LINE DESIGNATION

LINE STATIONING

HUNDRED FOOT INCREMENTS

CONTROL POINT

ALIGNMENT STAKE

STAKE EVERY 100 FEET ON TANGENTS,
EVERY 25 FEET ON CURVES

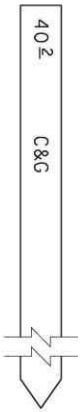

DISTANCE FROM ℄ (40.2 FEET)

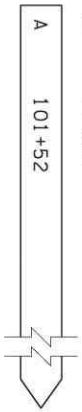

LINE DESIGNATION

LINE STATIONING

HUNDRED FOOT INCREMENTS

FRONT BACK

CLEARING/GRUBBING (C&G) LATH

STAKE AT EACH FULL STATION,
100 FEET ON TANGENTS,
EVERY 25 FEET ON CURVES.
NO HUB NECESSARY.

CUT TO BACK OF DITCH (2.2 FEET)

DISTANCE FROM ℄ TO CATCH (BACK OF DITCH) (25.7 FEET)

SIDE SLOPE RATIO (4H:1V)

BACK OF DITCH

LINE DESIGNATION

LINE STATIONING

HUNDRED FOOT INCREMENTS

FRONT BACK

SLOPE STAKE

OFFSET FROM SLOPE STAKE CATCH (10 FEET)

FILL AT RP STAKE (1.2 FEET)

CUT AT CATCH POINT (BACK OF DITCH)

DISTANCE FROM ℄ TO CATCH POINT

SIDE SLOPE RATIO (4H:1V)

BACK OF DITCH

LINE DESIGNATION

LINE STATIONING

HUNDRED FOOT INCREMENTS

FRONT BACK

LATH FOR SLOPE REFERENCES

OFFSET FROM SLOPE STAKE CATCH (7 FEET)

CUT AT ST STAKE (2.9 FEET)

DISTANCE FROM ℄ (27.6 FEET)

CUT AT CATCH POINT (2.2 FEET)

DISTANCE FROM ℄ TO CATCH (BACK OF DITCH) (23.5 FEET)

SIDE SLOPE RATIO (3H:1V)

LINE STATIONING

HUNDRED FOOT INCREMENTS

FRONT BACK

SLOPE TREATMENT (ST) STAKE FOR CUT SECTIONS

DAYLIGHT CATCH (CUT 0.0 FEET)

FILL (0.1 FEET)

SIDE SLOPE TO A 2% ROADWAY SLOPE (50H:1V)

DISTANCE FROM C (16.2 FEET)

DAYLIGHT (D/L) STAKE

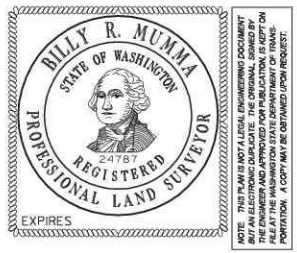

SURVEY STAKES

STANDARD PLAN A-10.10-00

SHEET 1 OF 2 SHEETS

APPROVED FOR PUBLICATION

Pasco Bakotich III — STATE DESIGN ENGINEER

08-07-07 — DATE

Washington State Department of Transportation

Provided to Builders Exchange of WA, Inc. For usage Conditions Agreement see www.bxwa.com - Always Verify Scale

DRAWN BY: ADAM COCHRAN

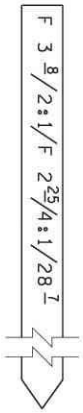

FILL FROM CATCH POINT TO BEGINNING OF SECOND SLOPE (3.8 FEET)

SLOPE RATIO (2H:1V)

FILL TO SUBGRADE SHOULDER (2.25 FEET)

SLOPE RATIO (4H:1V)

DISTANCE FROM ℄ TO CATCH POINT (28.7 FEET)

COMPOUND SLOPE LATH

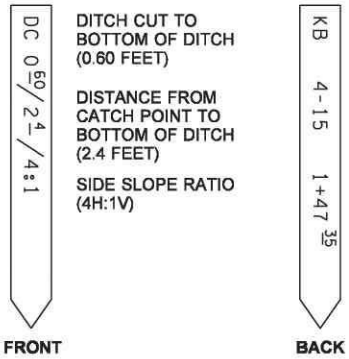

DITCH CUT TO BOTTOM OF DITCH (0.60 FEET)

DISTANCE FROM CATCH POINT TO BOTTOM OF DITCH (2.4 FEET)

SIDE SLOPE RATIO (4H:1V)

STRUCTURE NOTE REFERENCE

PLAN SHEET NUMBER (4) STRUCTURE NOTE NUMBER (15)

DITCH SECTION ALIGNMENT STATIONING

FRONT BACK

STAKE FOR DITCH CONSTRUCTION

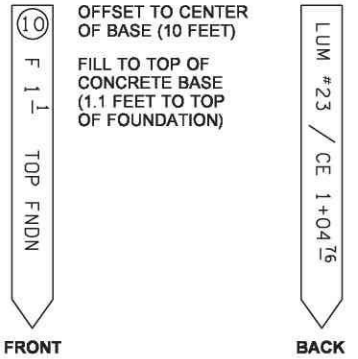

OFFSET TO CENTER OF BASE (10 FEET)

FILL TO TOP OF CONCRETE BASE (1.1 FEET TO TOP OF FOUNDATION)

LUMINAIRE NUMBER (23)

LINE DESIGNATION AND STATIONING

HUNDRED FOOT INCREMENTS

FRONT BACK

STAKE FOR FOUNDATION OF LUMINAIRES, SIGNALS OR SIGN STRUCTURES

FILL TO SUBGRADE (0.35 FEET)

FILL TO FINISH GRADE (CURB ELEVATION) (0.73 FEET)

DISTANCE FROM ℄ (14.3 FEET)

SLOPE RATIO (2H:1V)

SLOPE LATH FOR CURB SECTION

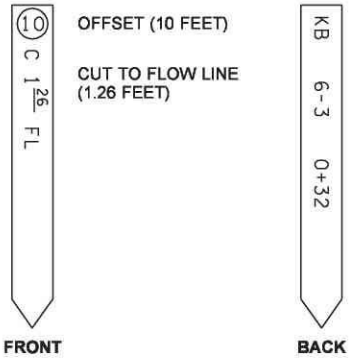

OFFSET (10 FEET)

CUT TO FLOW LINE (1.26 FEET)

STRUCTURE NOTE REFERENCE

PLAN SHEET NUMBER (6) STRUCTURE NOTE NUMBER (3)

DRAINAGE ALIGNMENT STATIONING

25' INCREMENTS

FRONT BACK

STAKE FOR DRAINAGE

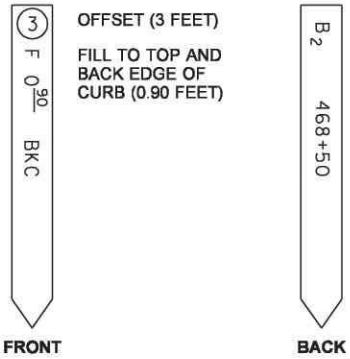

OFFSET (3 FEET)

FILL TO TOP AND BACK EDGE OF CURB (0.90 FEET)

LINE DESIGNATION

LINE STATIONING

HUNDRED FOOT INCREMENTS

FRONT BACK

STAKE FOR CURB/GUTTER

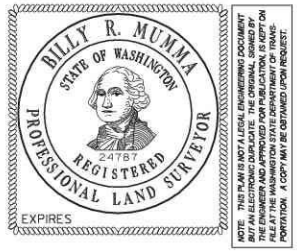

SURVEY STAKES

STANDARD PLAN A-10.10-00

SHEET 2 OF 2 SHEETS

APPROVED FOR PUBLICATION

Pasco Bakotich III — STATE DESIGN ENGINEER

08-07-07 — DATE

Washington State Department of Transportation

Provided to Builders Exchange of WA, Inc. For usage Conditions Agreement see www.bxwa.com - Always Verify Scale

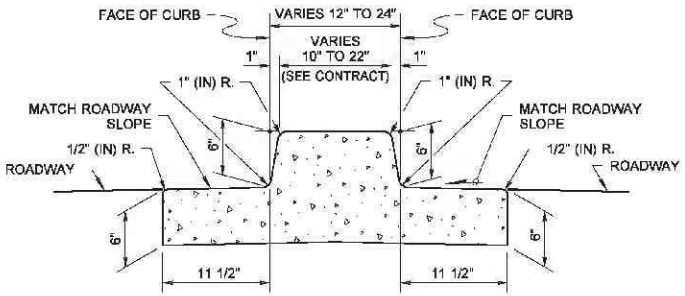

DUAL-FACED CEMENT CONCRETE TRAFFIC CURB AND GUTTER

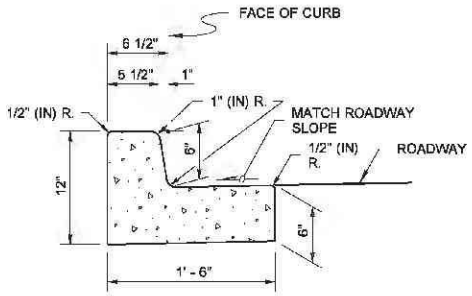

CEMENT CONCRETE TRAFFIC CURB AND GUTTER

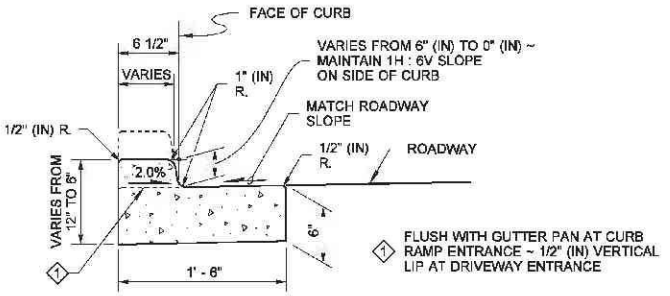

DEPRESSED CURB SECTION
AT CURB RAMPS AND DRIVEWAY ENTRANCES

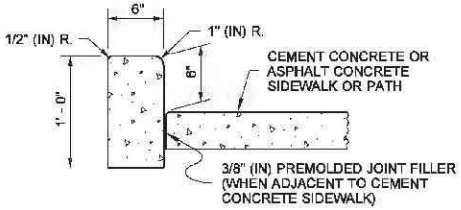

CEMENT CONCRETE PEDESTRIAN CURB

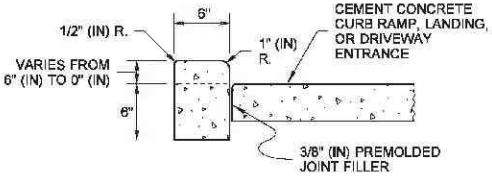

CEMENT CONCRETE PEDESTRIAN CURB
AT CURB RAMPS, LANDINGS, AND DRIVEWAY ENTRANCES

NOTE

1. See **Standard Plan F-30.10** for Curb Expansion and Contraction Joint spacing and see **Standard Specification Sections 8-04 and 9-04** for additional requirements.

DRAWN BY: FERN LIDDELL

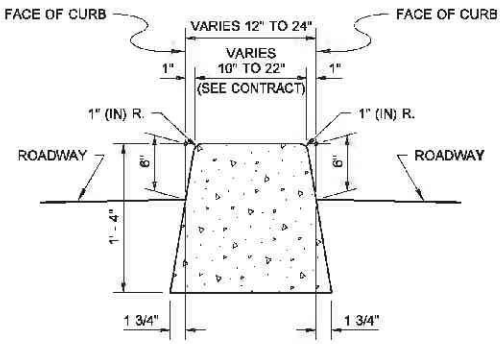

DUAL-FACED CEMENT CONCRETE TRAFFIC CURB

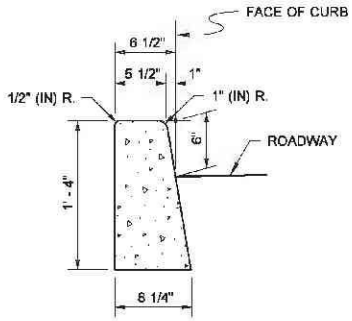

CEMENT CONCRETE TRAFFIC CURB

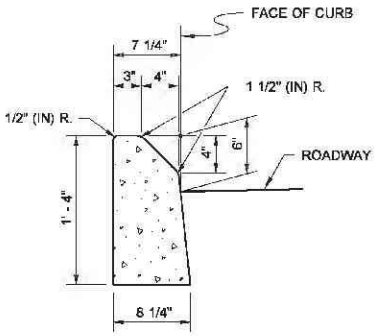

MOUNTABLE CEMENT CONCRETE TRAFFIC CURB

Barry, Ed
May 6 2014 3:31 PM

CEMENT CONCRETE CURBS

STANDARD PLAN F-10.12-03

SHEET 1 OF 1 SHEET

APPROVED FOR PUBLICATION
Dakotich, Fesco
Jun 11 2014 1:25 PM
STATE DESIGN ENGINEER
Washington State Department of Transportation

Provided to Builders Exchange of WA, Inc. For usage Conditions Agreement see www.bxwa.com - Always Verify Scale

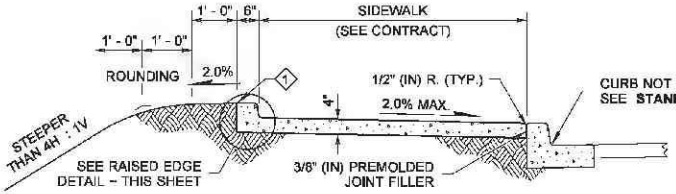

WITH RAISED EDGE

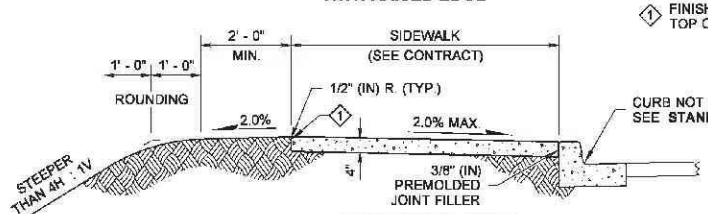

ADJACENT TO CURB
(STEEP FILL SLOPES)

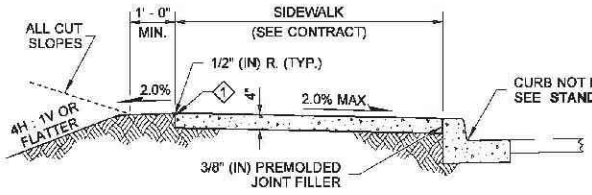

ADJACENT TO CURB

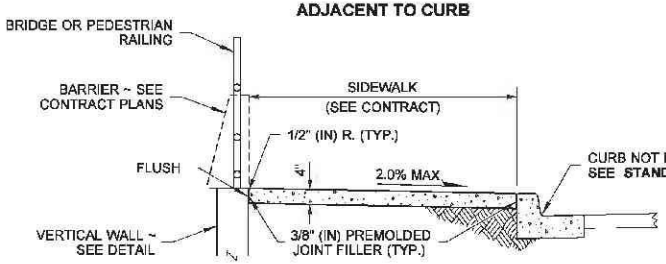

ADJACENT TO CURB AND RAILING OR WALL

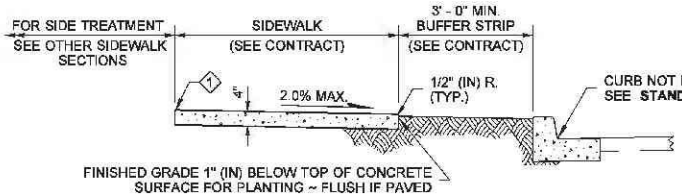

ADJACENT TO BUFFER STRIP

1 FINISHED GRADE 1" (IN) BELOW TOP OF CONCRETE SURFACE

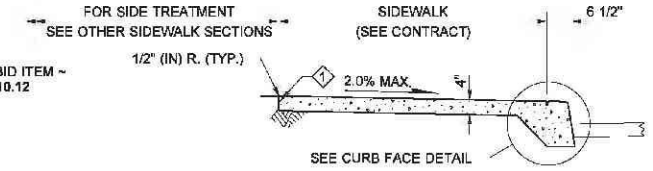

MONOLITHIC CEMENT CONCRETE CURB AND SIDEWALK

NOTE

1. Four feet of the sidewalk width shall be the minimum pedestrian accessible route free of vertical and horizontal obstructions. Gratings, Access Covers, Junction Boxes, Cable Vaults, Pull Boxes and other appurtenances within the sidewalk must have slip resistant surfaces, be flush with surface, and match grade of the sidewalk.

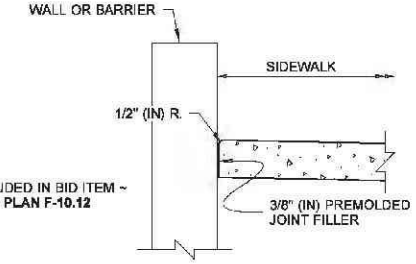

SIDEWALK ADJACENT TO WALL DETAIL

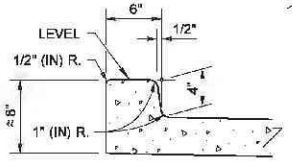

RAISED EDGE DETAIL

EXTEND SIDEWALK TRANSVERSE JOINTS TO INCLUDE RAISED EDGE

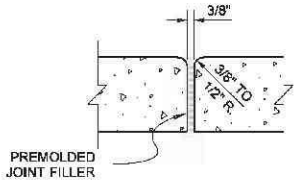

(E) EXPANSION JOINT

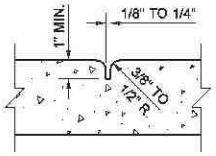

(C) CONTRACTION JOINT

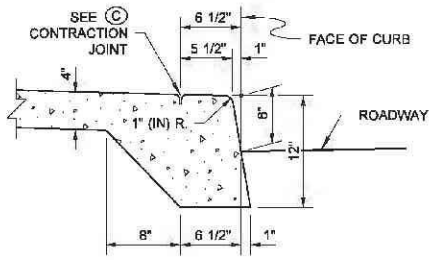

CURB FACE DETAIL

EXTEND SIDEWALK TRANSVERSE EXPANSION JOINTS TO INCLUDE CURB (FULL DEPTH)

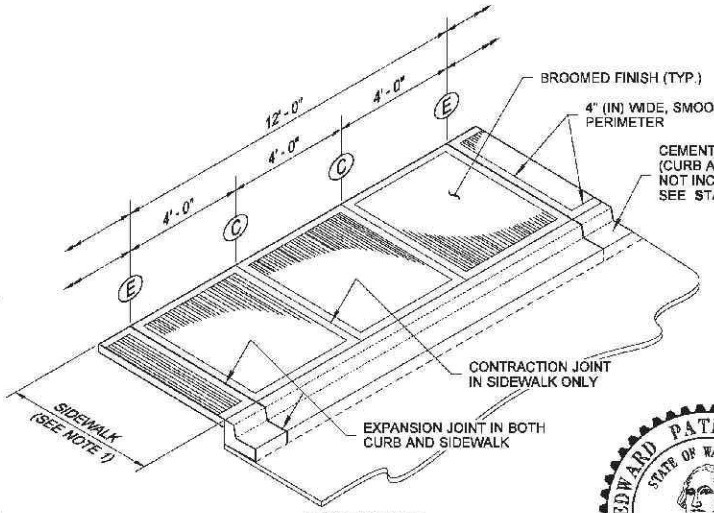

ISOMETRIC VIEW

JOINT AND FINISH DETAIL

DRAWN BY: LISA CYFORD

EDWARD PATRICK BARRY
STATE OF WASHINGTON
34363
REGISTERED
PROFESSIONAL ENGINEER

Barry, Ed
May 6 2014 3:41 PM

CEMENT CONCRETE SIDEWALK

STANDARD PLAN F-30.10-03

SHEET 1 OF 1 SHEET

APPROVED FOR PUBLICATION
Olympia, Pasco
Jan 11 2011 1:25 PM
STATE DESIGN ENGINEER
Washington State Department of Transportation

Provided to Builders Exchange of WA, Inc. For usage Conditions Agreement see www.bxwa.com - Always Verify Scale

DRAWN BY: BILL BERENS

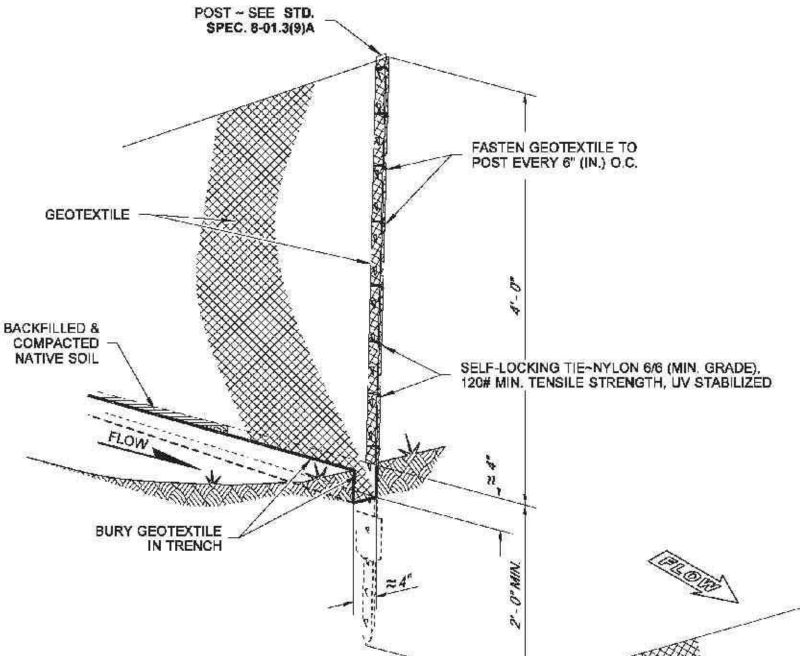

NOTE

DURING EXCAVATION, MINIMIZE DISTURBING THE GROUND AROUND TRENCH AS MUCH AS IS FEASIBLE, AND SMOOTH SURFACE FOLLOWING EXCAVATION TO AVOID CONCENTRATING FLOWS. COMPACTION MUST BE ADEQUATE TO PREVENT UNDERCUTTING FLOWS.

TYPICAL INSTALLATION DETAIL

(STEEL POSTS SHOWN)

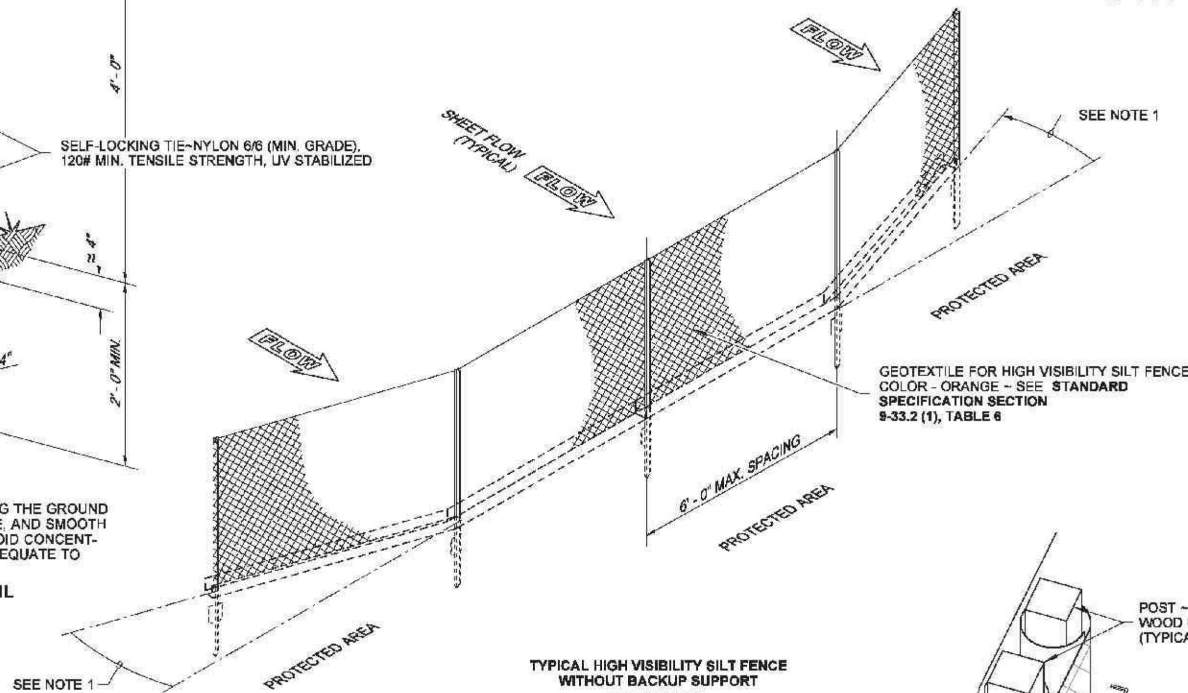

TYPICAL HIGH VISIBILITY SILT FENCE WITHOUT BACKUP SUPPORT

ISOMETRIC

(STEEL POSTS SHOWN)

NOTES

1. Install the ends of the high visibility silt fence to point slightly upslope to prevent sediment from flowing around the ends of the fence.
2. Perform maintenance in accordance with **Standard Specifications 8-01.3(9)A and 8-01.3(15)**.
3. Splices shall never be placed in low spots or sump locations. If splices are located in low or sump areas, the fence may need to be reinstalled unless the Project Engineer approves the installation.
4. Install silt fencing parallel to mapped contour lines.

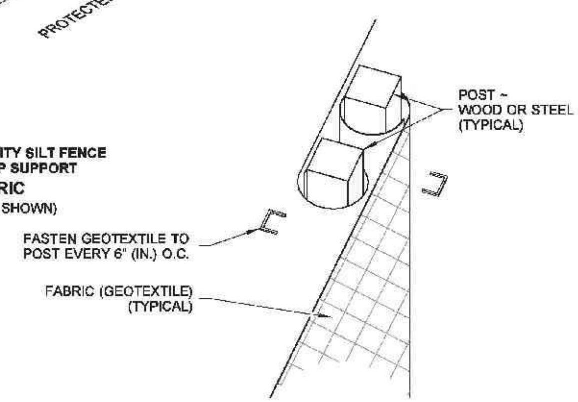

SPLICED FENCE SECTIONS SHALL BE CLOSE ENOUGH TOGETHER TO PREVENT SILT LADEN WATER FROM ESCAPING THROUGH THE FENCE AT THE OVERLAP. JOINING SECTIONS SHALL NOT BE PLACED IN LOW SPOTS OR IN SUMP LOCATIONS.

SPLICE DETAIL

(WOOD POSTS SHOWN)

STATE OF WASHINGTON REGISTERED LANDSCAPE ARCHITECT

SANDRA L. SALISBURY

CERTIFICATE NO. 000860

NOTE: THIS PLAN IS NOT A LEGAL ENGINEERING DOCUMENT BUT AN ELECTRONIC DUPLICATE. THE ORIGINAL, SIGNED BY THE ENGINEER AND APPROVED FOR PUBLICATION, IS KEPT ON FILE AT THE WASHINGTON STATE DEPARTMENT OF TRANSPORTATION. A COPY MAY BE OBTAINED UPON REQUEST.

HIGH VISIBILITY SILT FENCE

STANDARD PLAN I-30.17-00

SHEET 1 OF 1 SHEET

APPROVED FOR PUBLICATION	
Pasco Bakotich III	*3/22/13*
STATE DESIGN ENGINEER	DATE

Washington State Department of Transportation

Provided to Builders Exchange of WA, Inc. For usage Conditions Agreement see www.bxwa.com - Always Verify Scale

DRAWN BY: LISA CYFORD

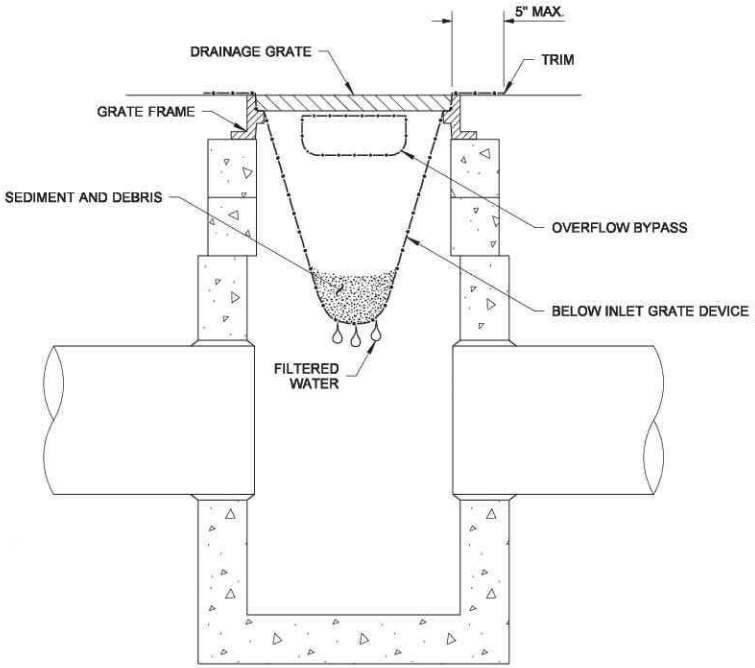

SECTION VIEW
NOT TO SCALE

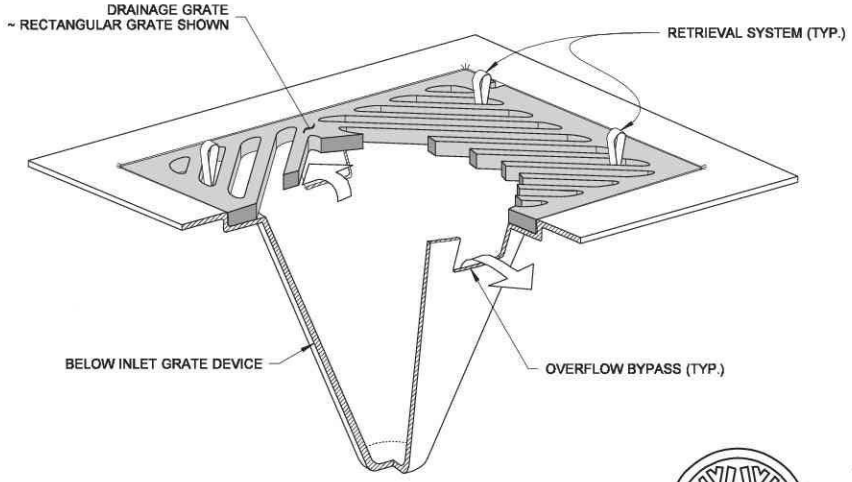

ISOMETRIC VIEW

NOTES

1. Size the Below Inlet Grate Device (BIGD) for the storm water structure it will service.
2. The BIGD shall have a built-in high-flow relief system (overflow bypass).
3. The retrieval system must allow removal of the BIGD without spilling the collected material.
4. Perform maintenance in accordance with Standard Specification 8-01.3(15).

STATE OF WASHINGTON
REGISTERED
LANDSCAPE ARCHITECT
MARK W. MAURER
CERTIFICATE NO. 000598

NOTE: THIS PLAN IS NOT A LEGAL ENGINEERING DOCUMENT BUT AN ELECTRONIC DUPLICATE. THE ORIGINAL, SIGNED BY THE ENGINEER AND APPROVED FOR PUBLICATION, IS KEPT ON FILE AT THE WASHINGTON STATE DEPARTMENT OF TRANSPORTATION. A COPY MAY BE OBTAINED UPON REQUEST.

STORM DRAIN INLET PROTECTION

STANDARD PLAN I-40.20-00

SHEET 1 OF 1 SHEET

APPROVED FOR PUBLICATION

Pasco Bakotich III — STATE DESIGN ENGINEER
09-20-07 — DATE

Washington State Department of Transportation

Provided to Builders Exchange of WA, Inc. For usage Conditions Agreement see www.bxwa.com - Always Verify Scale

DRAWN BY: LISA CYFORD

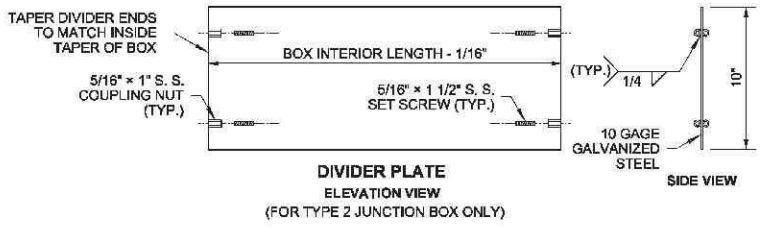

DIVIDER PLATE
ELEVATION VIEW
(FOR TYPE 2 JUNCTION BOX ONLY)

JUNCTION BOX DIMENSION TABLE

MARK	ITEM	BOX TYPE	
		TYPE 1	TYPE 2
A	OUTSIDE LENGTH OF JUNCTION BOX	22"	33"
B	OUTSIDE WIDTH OF JUNCTION BOX	17"	22 1/2"
C	INSIDE LENGTH OF JUNCTION BOX	18" ~ 19"	28" ~ 29"
D	INSIDE WIDTH OF JUNCTION BOX	13" ~ 14"	17" ~ 18"
E	LID LENGTH	17 5/8"	28 5/8"
F	LID WIDTH	12 5/8"	18 1/8"
	CAPACITY ~ CONDUIT DIAMETER	6"	12"

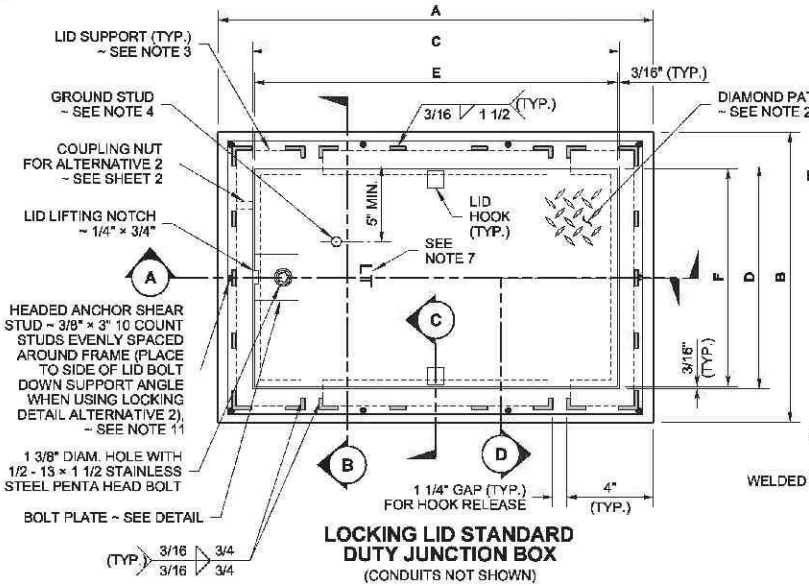

LOCKING LID STANDARD DUTY JUNCTION BOX
(CONDUITS NOT SHOWN)

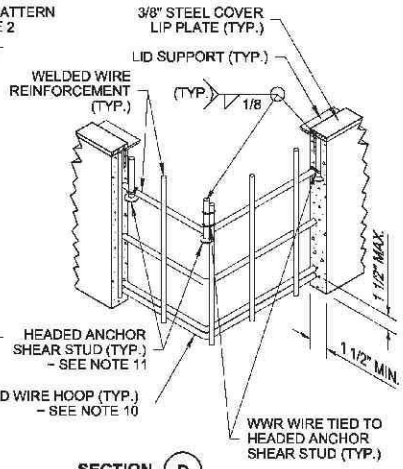

SECTION (D)
PERSPECTIVE VIEW

NOTES

1. All box dimensions are approximate. Exact configurations vary among manufacturers.
2. Minimum lid thickness shown. The diamond pattern shall be a minimum of 28% of the overall thickness. Junction Boxes installed in sidewalks, walkways, and shared-use paths shall have a slip-resistant coating on the lid and lip cover plate, and shall be installed with the surface flush with and matched to the grade of the sidewalk, walkway, or shared-use path. The non-slip lid shall be identified with permanent markings on the underside, indicating the type of surface treatment (see Contract Documents for details) and the year of manufacture. The permanent marking shall be 1/8" inch line thickness formed with a stainless steel weld bead and shall be placed prior to hot-dip galvanizing.
3. Lid support members shall be 3/16" minimum thick steel C, L, or T shape, welded to the frame.
4. A 1/4-20 NC × 3/4" stainless steel ground stud shall be welded to the bottom of the lid; include (2) stainless steel nuts and (2) stainless steel flat washers.
5. Bolts and nuts shall be liberally coated with anti-seize compound.
6. Equipment Bonding Jumper shall be # 8 AWG min. × 4' of tinned braided copper.
7. The System Identification letters shall be 1/8" line thickness formed by engraving, stamping, or with a S. S. weld bead. See Cover Marking detail. Grind off diamond pattern before forming letters. For System Identification details, see **Standard Specification 9-29.2(4).**
8. When required in the Contract, provide a 10" x 27 1/2", 10 gage divider plate, complete, with fasteners, in each Type 2 Junction Box where specified.
9. When required in Contract, provide a 12" deep extension for each Type 2 Junction Box where specified.
10. See the Standard Specifications for alternative reinforcement and class of concrete.
11. Headed Anchor Shear Studs must be welded to the Steel Cover Lip Plate and wire tied in two places to the vertical Welded Reinforcement Wire when in contact with each other. Wire tie all other Headed Anchor Shear Studs to the horizontal Welded Reinforcement Wire.
12. Lid Bolt Down Attachment Tab provides a method of retrofitting by using a mechanical process in lieu of welding. Attachment Tab shown depicts a typical component arrangement; actual configurations of assembly will vary among manufacturers. See approved manufacturers' shop drawings for specifics.
13. Unless otherwise noted in the plans or approved by the Engineer, Junction Boxes, Cable Vaults, and Pull Boxes shall not be placed within the sidewalks, walkways, shared use paths, traveled ways or paved shoulders. All Junction Boxes, Cable Vaults, and Pull Boxes placed within the traveled way or paved shoulders shall be Heavy-Duty.
14. Distance between the top of the conduit and the bottom of the Junction Box lid shall be 6" min. to 8" max. for final grade of new construction only. See **Standard Specification 8-20.3(5).** Where adjustments are to be made to existing Junction Boxes, or for interim construction stages during the contract, the limits shall be from 6" min. to 10" max. See **Standard Specification 8-20.3(6).**

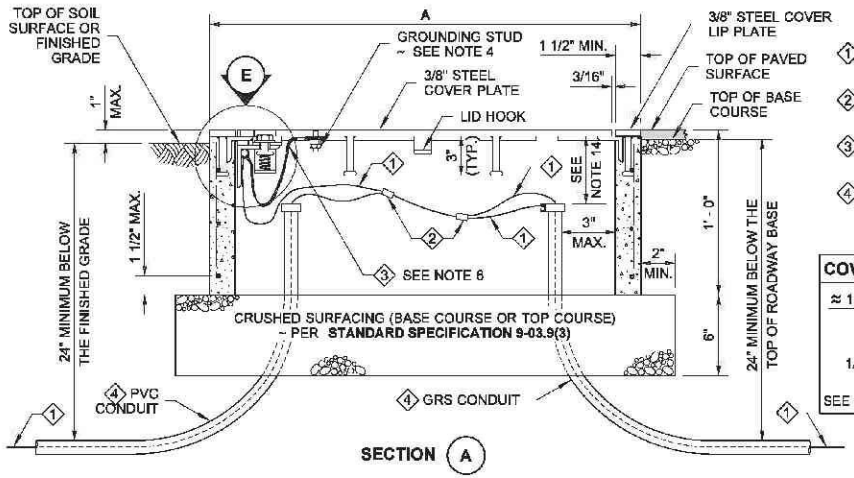

SECTION (A)

① Equipment Grounding Conductor
② Copper Solderless Crimp Connector
③ Equipment Bonding Jumper ~ see note 6
④ See Contract for conduit size and number

COVER MARKING DETAIL

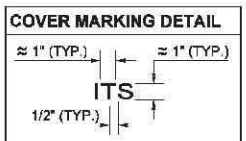

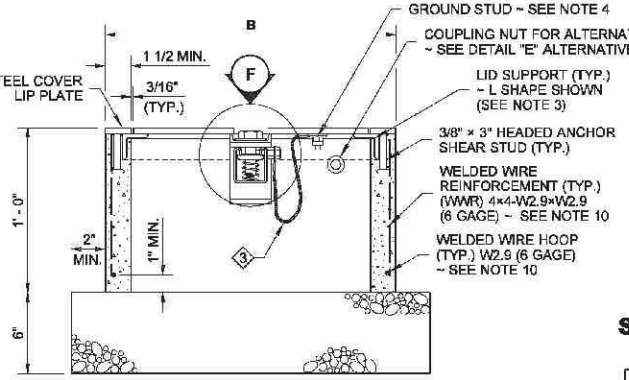

SECTION (B)
(CONDUITS NOT SHOWN)

THEODORE JOSEPH BAILEY
STATE OF WASHINGTON
39820
REGISTERED
PROFESSIONAL ENGINEER

NOTE: THIS PLAN IS NOT A LEGAL ENGINEERING DOCUMENT BUT AN ELECTRONIC DUPLICATE. THE ORIGINAL SIGNED BY THE ENGINEER AND APPROVED FOR PUBLICATION IS KEPT ON FILE AT THE WASHINGTON STATE DEPARTMENT OF TRANSPORTATION. A COPY MAY BE OBTAINED UPON REQUEST.

LOCKING LID STANDARD DUTY JUNCTION BOX TYPES 1 & 2

STANDARD PLAN J-40.10-03

SHEET 1 OF 2 SHEETS

APPROVED FOR PUBLICATION

Pasco Bakotich III — STATE DESIGN ENGINEER — 5/20/13 — DATE

Washington State Department of Transportation

Provided to Builders Exchange of WA, Inc. For usage Conditions Agreement see www.bxwa.com - Always Verify Scale

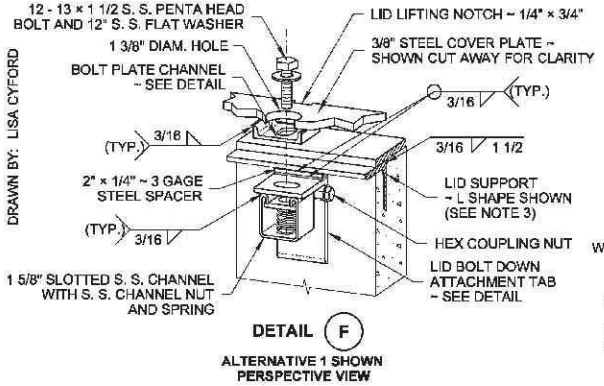

DETAIL (F)
ALTERNATIVE 1 SHOWN
PERSPECTIVE VIEW

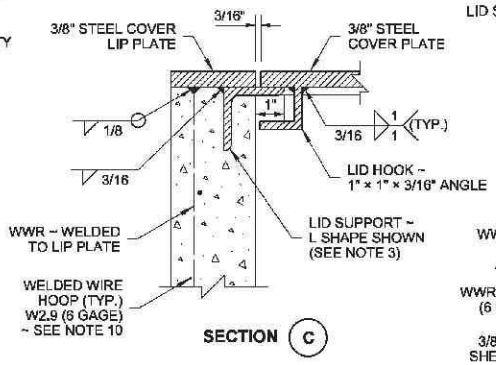

SECTION (C)

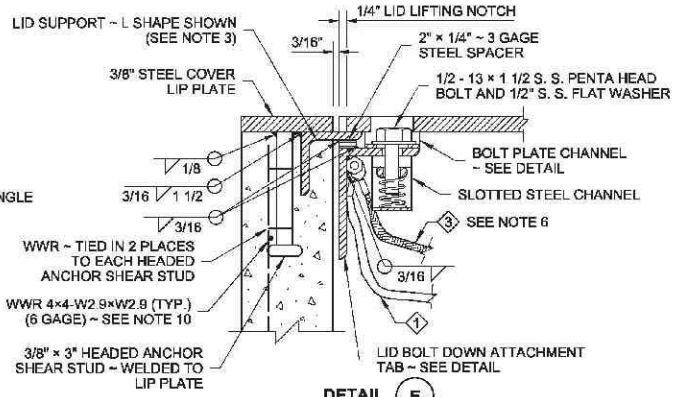

DETAIL (E)
ALTERNATIVE 1 SHOWN

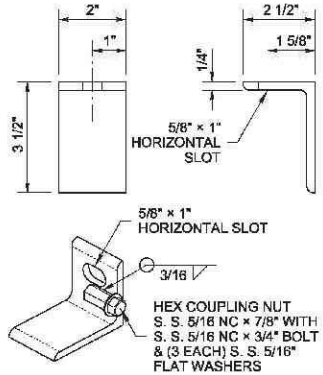

ALTERNATIVE 1
LID BOLT DOWN ATTACHMENT TAB
(SEE NOTE 12)

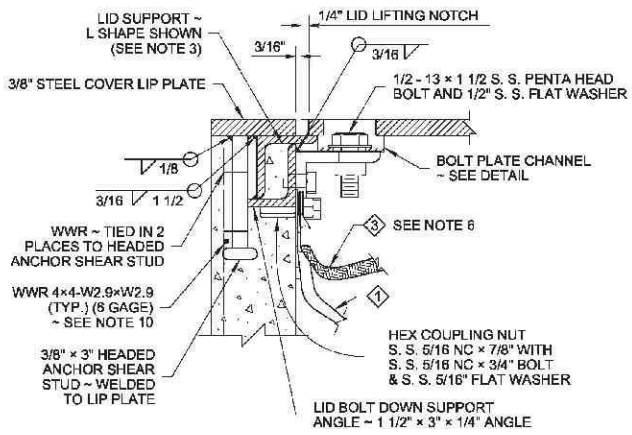

DETAIL (E)
ALTERNATIVE 2 SHOWN

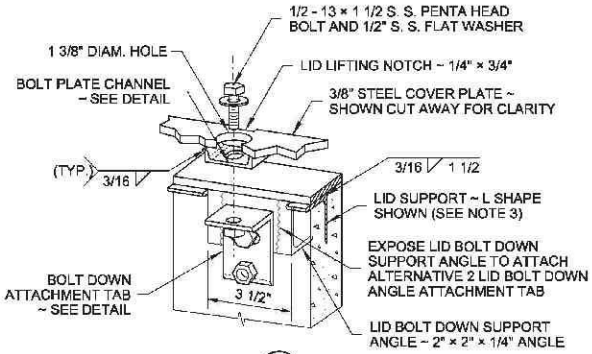

DETAIL (F)
ALTERNATIVE 2 SHOWN
PERSPECTIVE VIEW

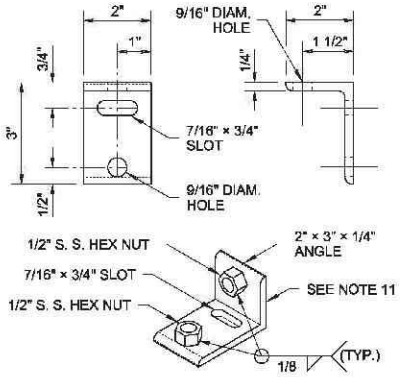

ALTERNATIVE 2
LID BOLT DOWN ATTACHMENT TAB
(SEE NOTE 12)

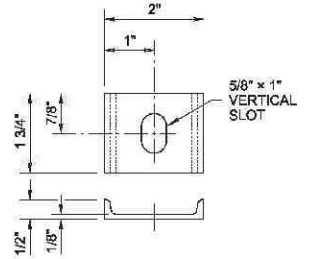

BOLT PLATE CHANNEL

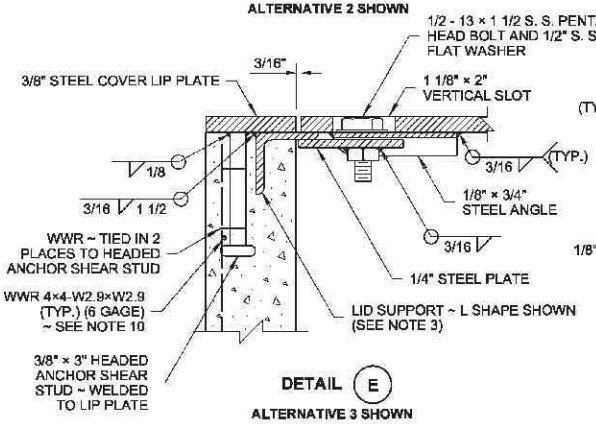

DETAIL (E)
ALTERNATIVE 3 SHOWN

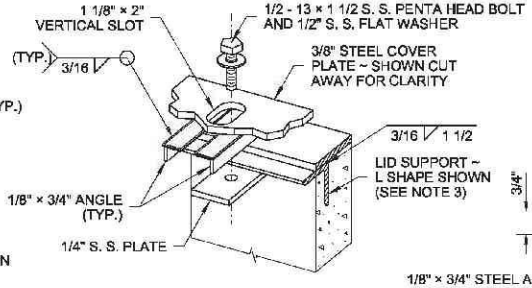

DETAIL (F)
ALTERNATIVE 3 SHOWN
PERSPECTIVE VIEW

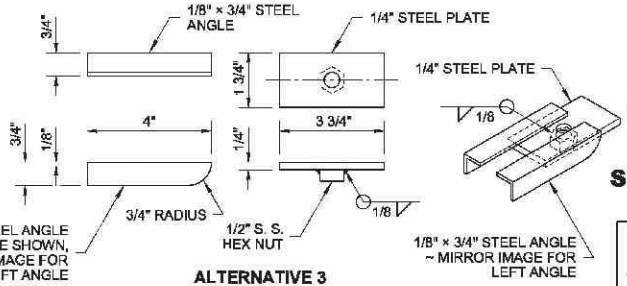

ALTERNATIVE 3
LID BOLT DOWN ATTACHMENT TAB
(SEE NOTE 12)

THEODORE JOSEPH BAILEY
STATE OF WASHINGTON
39820
REGISTERED
PROFESSIONAL ENGINEER

NOTE: THIS PLAN IS NOT A LEGAL ENGINEERING DOCUMENT BUT AN ELECTRONIC DUPLICATE. THE ORIGINAL, SIGNED BY THE ENGINEER AND APPROVED FOR PUBLICATION, IS KEPT ON FILE AT THE WASHINGTON STATE DEPARTMENT OF TRANSPORTATION. A COPY MAY BE OBTAINED UPON REQUEST.

LOCKING LID STANDARD DUTY JUNCTION BOX TYPES 1 & 2

STANDARD PLAN J-40.10-03

SHEET 2 OF 2 SHEETS

APPROVED FOR PUBLICATION

Pasco Bakotich III — STATE DESIGN ENGINEER — 5/20/13 — DATE

Washington State Department of Transportation

Provided to Builders Exchange of WA, Inc. For usage Conditions Agreement see www.bxwa.com - Always Verify Scale

DRAWN BY: LISA CYFORD

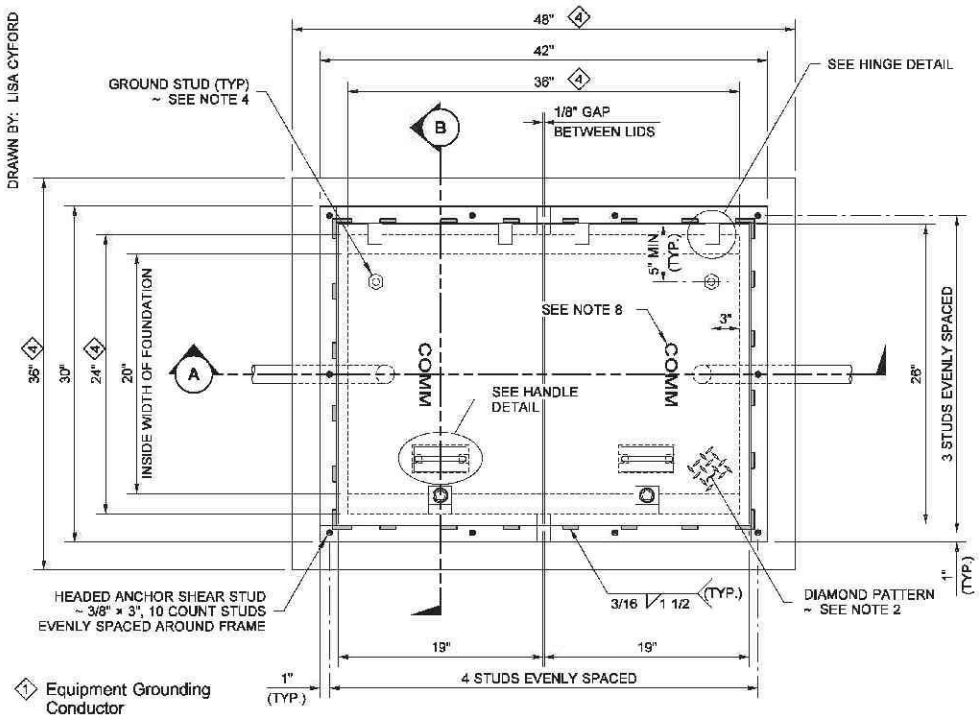

PLAN VIEW

LOCKING LID STANDARD DUTY JUNCTION BOX

1. Equipment Grounding Conductor
2. Copper Solderless Crimp Connector
3. Equipment Bonding Jumper
4. Foundation
5. See Contract for conduit size and number

COVER MARKING DETAIL

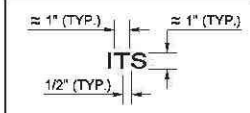

SEE NOTE 8

NOTES

1. All box dimensions are approximate. Exact configurations vary among manufacturers.
2. Minimum lid thicknesses are shown. The diamond pattern shall be a minimum of 28% of the overall thickness. Junction Boxes installed in sidewalks, walkways, and shared-use paths shall have a slip-resistant coating on the lid and lip cover plate and shall be installed with the surface flush with and matched to the grade of the sidewalk, walkway, or shared-use path. The non-slip lid shall be identified with permanent markings on the underside, indicating the type of surface treatment (see Contract Documents for details) and the year of manufacture. The permanent marking shall be 1/8" inch line thickness formed with a stainless steel weld bead and shall be placed prior to hot-dip galvanizing.
3. Lid support members shall be 3/16" min. thick steel C, L, or T shape, welded to the frame. Exact configurations vary among manufacturers.
4. A 1/4-20 NC × 3/4" S. S. ground stud shall be welded to the bottom of each lid; include (2) S. S. nuts and (2) S. S. flat washers.
5. The hinges shall allow the lids to open 180°.
6. Bolts and nuts shall be liberally coated with anti-seize compound.
7. Connect Equipment Bonding Jumper to ground stud on lid. As an alternative to the ground stud connection, the Equipment Bonding Jumper shall be attached to the front face of the hinge pocket with a 5/16-20 NC × 3/4" S. S. bolt, (2) each S. S. nuts, and (2) each S. S. flat washers. Equipment Bonding Jumper shall be #8 AWG min. × 4' of tinned braided copper.
8. The System Identification letters shall be 1/8" line thickness formed by engraving, stamping, or with a S. S. weld bead. See Cover Marking detail. Grind off diamond pattern before forming letters. See **Standard Specification 9-29.2(4)** for details.
9. See the Standard Specifications for alternative reinforcement and class of concrete.
10. See **Standard Plan J-40.10** for Welded Wire Reinforcement and Headed Anchor Shear Stud attachment details.
11. Capacity ~ conduit diameter = 24"
12. Lid Bolt Down Attachment Tab provides a method of retrofitting by using a mechanical process in lieu of welding. Attachment Tab shown depicts a typical component arrangement; actual configurations of assembly will vary among manufacturers. See approved manufacturers' shop drawing for specifics.
13. Unless otherwise noted in the plans or approved by the Engineer, Junction Boxes, Cable Vaults and Pull Boxes shall not be placed within the sidewalk, walkway, shared use path, traveled way or paved shoulders. All Junction Boxes, Cable Vaults, and Pull Boxes placed within the traveled way or paved shoulders shall be Heavy-Duty.
14. Distance between the top of the conduit and the bottom of the Junction Box lid shall be 6" min. to 8" max. for final grade of new construction only. See **Standard Specification 8-20.3(5).** Where adjustments are to be made to existing Junction Boxes, or for interim construction stages during the contract, the limits shall be from 6" min. to 10" max. See **Standard Specification 8-20.3(6).**

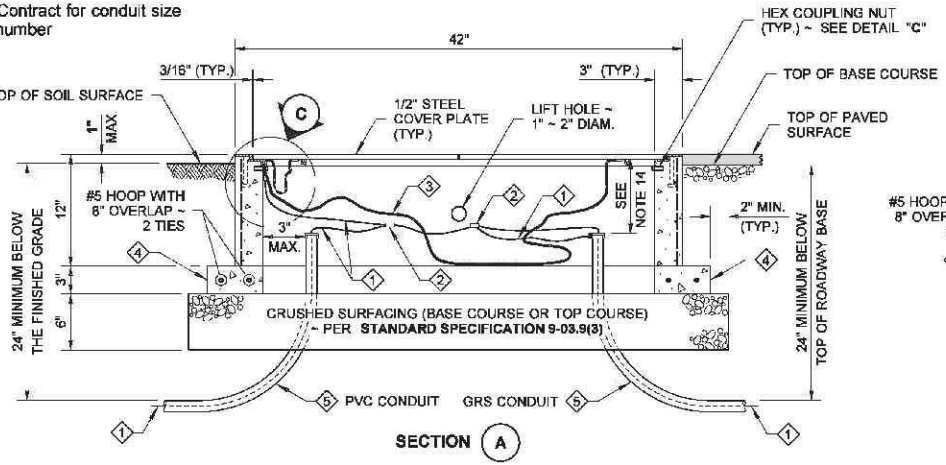

SECTION (A)

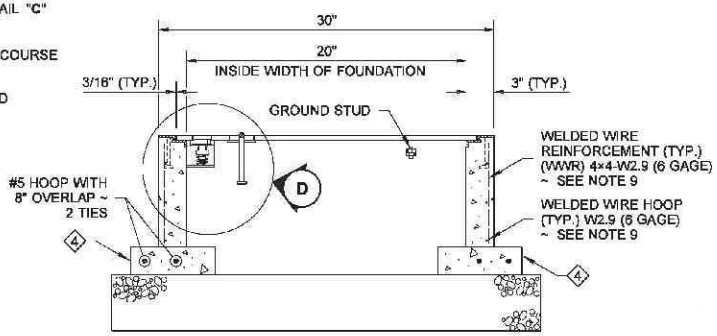

SECTION (B)

CONDUITS NOT SHOWN

THEODORE JOSEPH BAILEY
STATE OF WASHINGTON
39820
REGISTERED
PROFESSIONAL ENGINEER

NOTE: THIS PLAN IS NOT A LEGAL ENGINEERING DOCUMENT BUT AN ELECTRONIC DUPLICATE. THE ORIGINAL, SIGNED BY THE ENGINEER AND APPROVED FOR PUBLICATION, IS KEPT ON FILE AT THE WASHINGTON STATE DEPARTMENT OF TRANSPORTATION. A COPY MAY BE OBTAINED UPON REQUEST.

LOCKING LID STANDARD DUTY JUNCTION BOX TYPE 8

STANDARD PLAN J-40.30-03

SHEET 1 OF 2 SHEETS

APPROVED FOR PUBLICATION

Pasco Bakotich III — *5/20/13*

STATE DESIGN ENGINEER — DATE

Washington State Department of Transportation

Provided to Builders Exchange of WA, Inc. For usage Conditions Agreement see www.bxwa.com - Always Verify Scale

DRAWN BY: LISA CYFORD

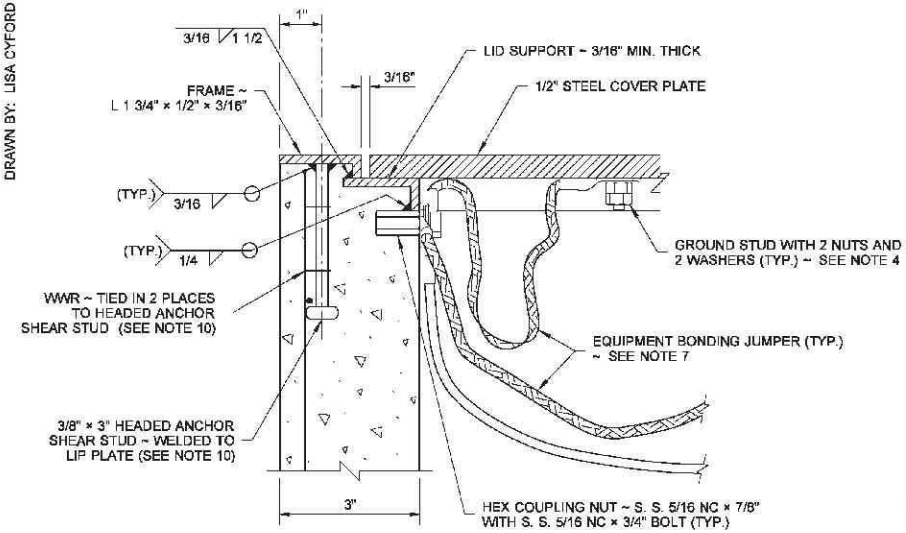

DETAIL (C)

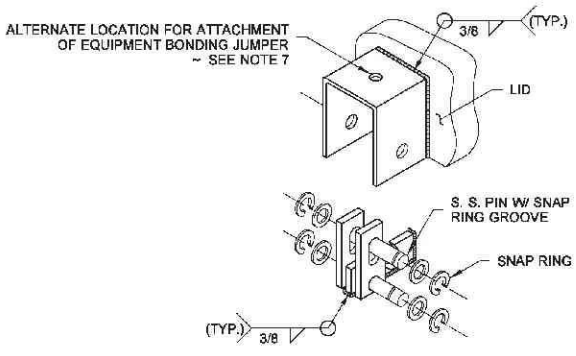

HINGE DETAIL

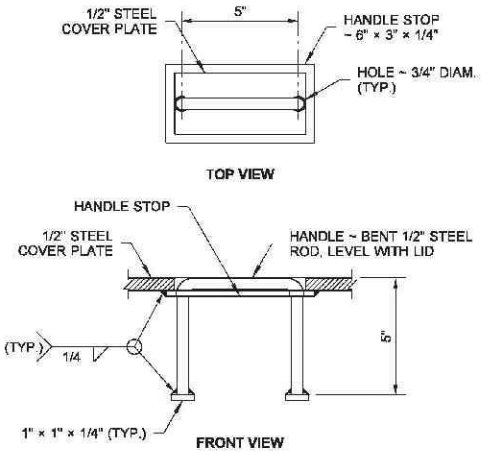

HANDLE DETAIL

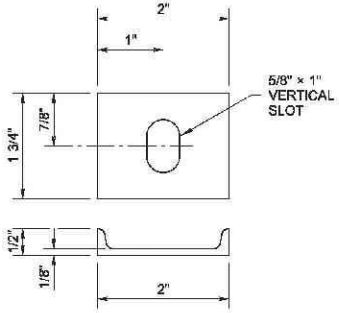

BOLT PLATE CHANNEL

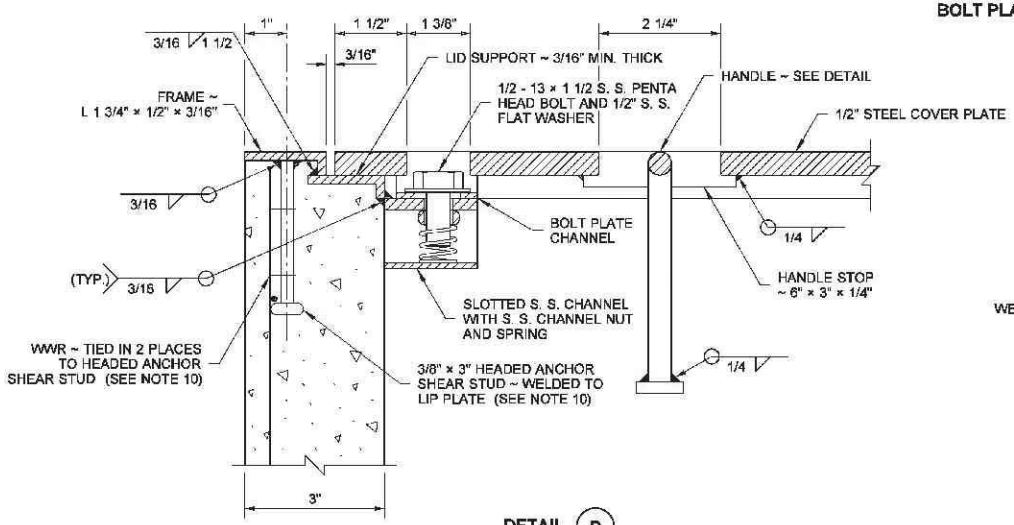

DETAIL (D)

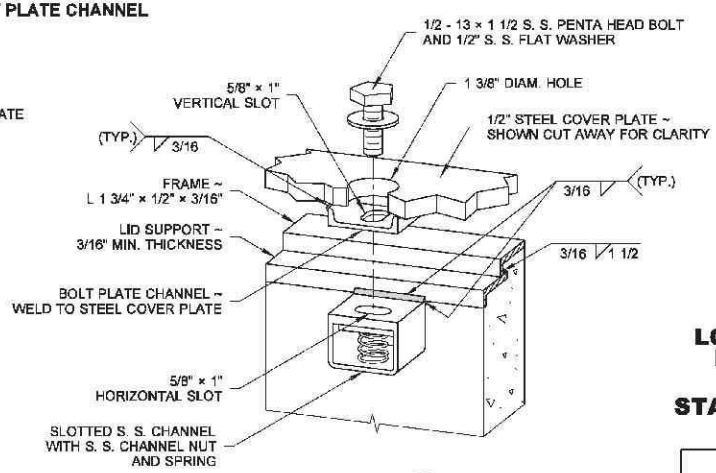

DETAIL (D)
ISOMETRIC VIEW

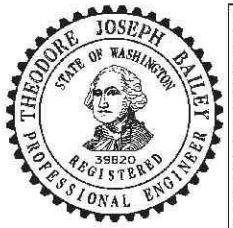

NOTE: THIS PLAN IS NOT A LEGAL ENGINEERING DOCUMENT BUT AN ELECTRONIC DUPLICATE. THE ORIGINAL, SIGNED BY THE ENGINEER AND APPROVED FOR PUBLICATION, IS KEPT ON FILE AT THE WASHINGTON STATE DEPARTMENT OF TRANSPORTATION. A COPY MAY BE OBTAINED UPON REQUEST.

LOCKING LID STANDARD DUTY JUNCTION BOX TYPE 8

STANDARD PLAN J-40.30-03

SHEET 2 OF 2 SHEETS

APPROVED FOR PUBLICATION

Pasco Bakotich III — STATE DESIGN ENGINEER — *5/20/13* — DATE

Washington State Department of Transportation

Provided to Builders Exchange of WA, Inc. For usage Conditions Agreement see www.bxwa.com - Always Verify Scale

DRAWN BY: LISA CYFORD

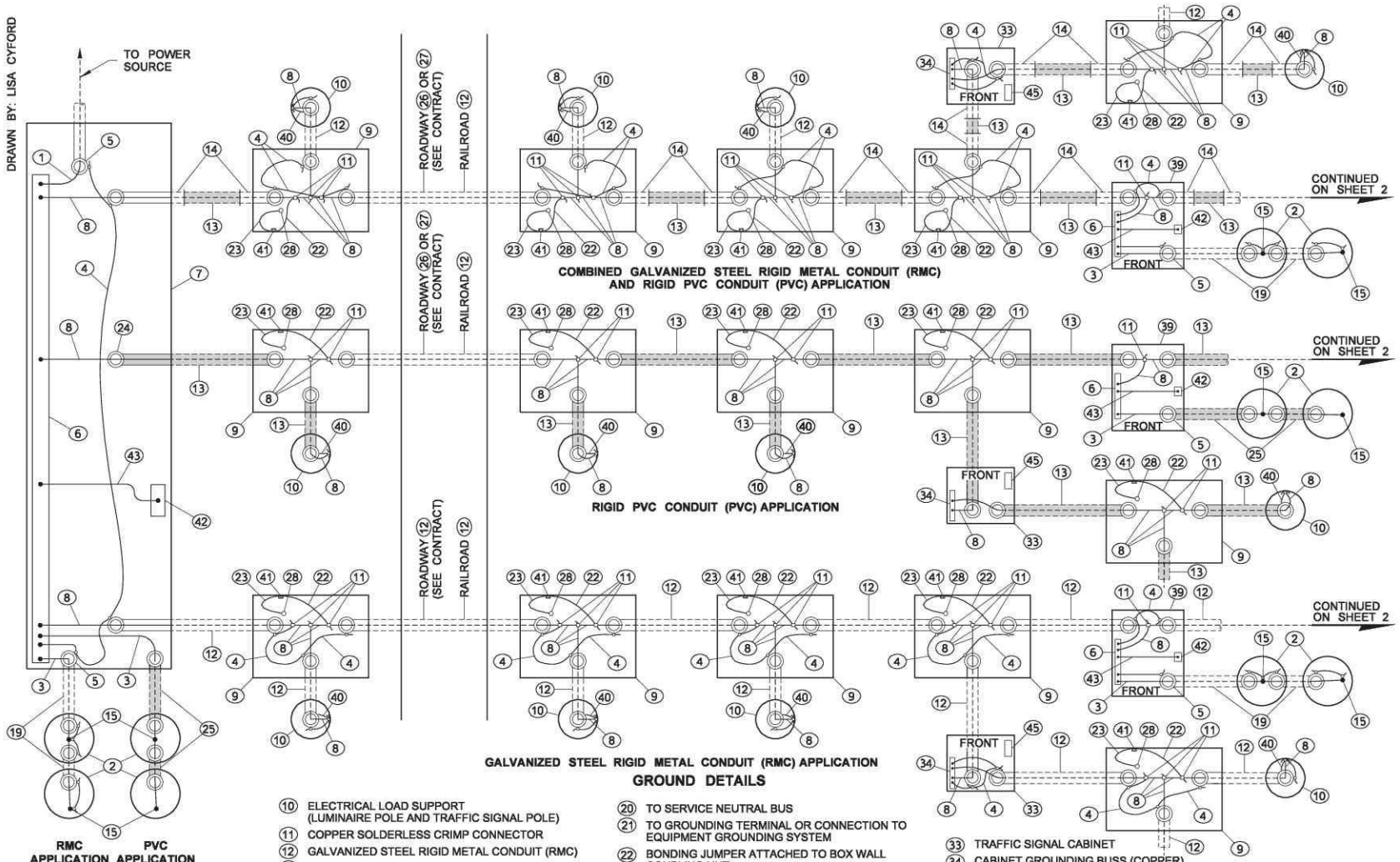

RMC APPLICATION

PVC APPLICATION

GROUND DETAILS

KEY

1. SERVICE NEUTRAL
2. SERVICE GROUND
3. GROUNDING ELECTRODE CONDUCTOR
4. BONDING JUMPER
5. GROUNDING BUSHING (TYP. ALL RMC CONDUIT TERMINATIONS)
6. GROUNDED NEUTRAL BUS (COPPER)
7. SERVICE ENCLOSURE
8. EQUIPMENT GROUNDING CONDUCTOR
9. JUNCTION BOX
10. ELECTRICAL LOAD SUPPORT (LUMINAIRE POLE AND TRAFFIC SIGNAL POLE)
11. COPPER SOLDERLESS CRIMP CONNECTOR
12. GALVANIZED STEEL RIGID METAL CONDUIT (RMC)
13. RIGID PVC CONDUIT (PVC)
14. OPTION A - 10' RMC WITH FIELD BEND
    - APPROVED ADAPTER FITTING
    - GROUNDING BUSHING

    OPTION B - 10' RMC
    - GS FACTORY ELBOWS
    - APPROVED ADAPTER FITTING
    - GS COUPLING
    - GROUNDING BUSHING
15. GROUND ROD
16. EDGE OF FOUNDATION, POLE OR SERVICE SUPPORT
17. CLAMP
18. JUNCTION BOX OR 8" DRAIN TILE WITH APPROVED COVER
19. CODE SIZE RMC
20. TO SERVICE NEUTRAL BUS
21. TO GROUNDING TERMINAL OR CONNECTION TO EQUIPMENT GROUNDING SYSTEM
22. BONDING JUMPER ATTACHED TO BOX WALL COUPLING NUT
23. BONDING JUMPER ATTACHED TO BOX LID(S) GROUND STUD. # 8 AWG (MIN.) × 4' TINNED BRAIDED COPPER.
24. END BELL BUSHING (TYP. ALL NON-METALLIC CONDUIT TERMINATIONS)
25. CODE SIZED PVC
26. HIGH-DENSITY POLYETHYLENE CONDUIT (HDPE)
27. NON-METALLIC CONDUIT (PVC) SCHEDULE 80
28. BOX LID(S) GROUND STUD
29. CABLE VAULT
30. PULL BOX
31. ITS CABINET
32. EDGE OF FOUNDATION
33. TRAFFIC SIGNAL CABINET
34. CABINET GROUNDING BUSS (COPPER)
35. RIGID PVC OUTERDUCT WITH PVC OR PE INNERDUCT
36. GALVANIZED STEEL RIGID METAL CONDUIT OUTERDUCT WITH PVC OR PE INNERDUCT
37. LOCATE WIRE. COIL 10' INSIDE CABINET, CABLE VAULT, OR PULL BOX
38. DETECTABLE UNDERGROUND WARNING TAPE. COIL 2' INSIDE CABINET, CABLE VAULT, OR PULL BOX
39. TRANSFORMER CABINET
40. GROUNDING CONDUCTOR NON-INSULATED (FROM REINFORCING CAGE)
41. BOX FRAME BONDING ATTACHMENT POINT
42. GROUND LUG WELDED TO CABINET WALL (W/ TINNED COPPER BUSS)
43. CABINET MAIN BONDING JUMPER
44. ITS CAMERA, RAMP METER, TRAFFIC DATA STATION, HIGHWAY ADVISORY RADIO
45. UNGROUNDED CABINET NEUTRAL BUSS (COPPER)

NOTES

1. If parallel circuits of different sizes are contained in one conduit, the size of the grounding conductor shall be determined on the basis of the largest conductor. Only one grounding conductor is required for each conduit, regardless of the number of circuits contained.
2. Service ground per serving utility requirement. If the utility uses aluminum service conductors, an approved Al-Cu pressure-type ground connector shall be used to secure the service neutral to the copper neutral bar in the service enclosure. Except for the above, all grounding conductors shall be copper.
3. Equipment grounding conductors and grounding electrode conductors shall be sized in accordance with the National Electric Code (No. 8 minimum).

JOHN C. NISBET
STATE OF WASHINGTON
29115
REGISTERED
PROFESSIONAL ENGINEER

NOTE: THIS PLAN IS NOT A LEGAL ENGINEERING DOCUMENT BUT AN ELECTRONIC DUPLICATE. THE ORIGINAL, SIGNED BY THE ENGINEER AND APPROVED FOR PUBLICATION, IS KEPT ON FILE AT THE WASHINGTON STATE DEPARTMENT OF TRANSPORTATION. A COPY MAY BE OBTAINED UPON REQUEST.

TYPICAL GROUNDING DETAILS

STANDARD PLAN J-60.05-00

SHEET 1 OF 4 SHEETS

APPROVED FOR PUBLICATION

Pasco Bakotich III — STATE DESIGN ENGINEER — 06-16-11 — DATE

Washington State Department of Transportation

Provided to Builders Exchange of WA, Inc. For usage Conditions Agreement see www.bxwa.com - Always Verify Scale

DRAWN BY: LISA CYFORD

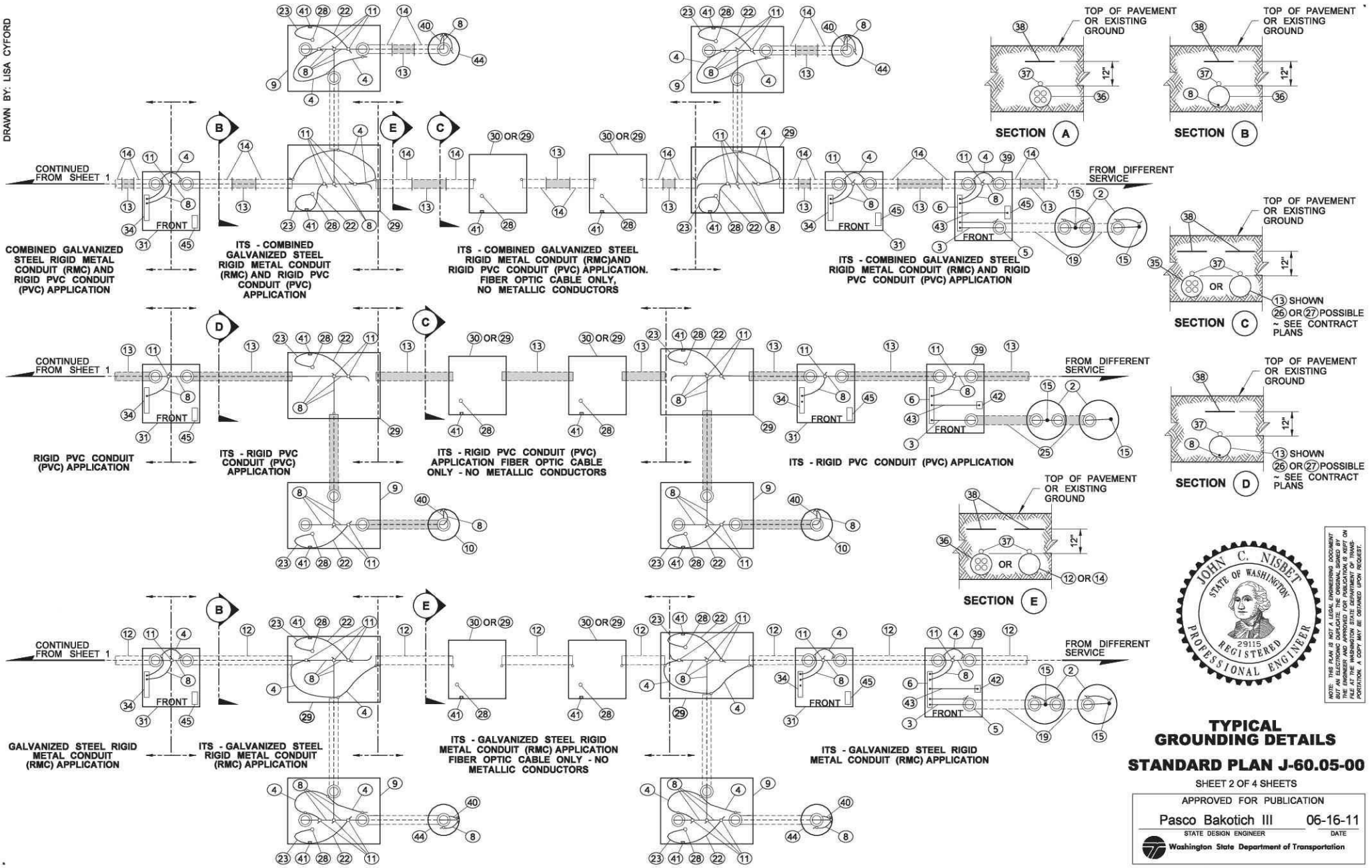

JOHN C. NISBET
STATE OF WASHINGTON
29115
REGISTERED
PROFESSIONAL ENGINEER

NOTE: THIS PLAN IS NOT A LEGAL ENGINEERING DOCUMENT BUT AN ELECTRONIC DUPLICATE. THE ORIGINAL, SIGNED BY THE ENGINEER AND APPROVED FOR PUBLICATION IS KEPT ON FILE AT WSDOT HEADQUARTERS. THIS FILE IS MADE AVAILABLE AS A CONVENIENCE COPY ONLY AND MAY NOT BE THE MOST CURRENT VERSION. NEITHER WSDOT NOR ANY OF ITS EMPLOYEES MAKE ANY WARRANTY, EXPRESS OR IMPLIED, OR ASSUME ANY LIABILITY REGARDING THE INFORMATION CONTAINED ON THIS PLAN, OR ANY PARTICULAR USE OF THIS PLAN. THE PLAN MAY BE A REDUCED VERSION OF THE ORIGINAL PLAN. DIMENSIONS AND SCALE OF THE ELECTRONIC FILE MAY NOT BE THE SAME AS THE ORIGINAL PLAN. A COPY MAY BE OBTAINED UPON REQUEST.

TYPICAL GROUNDING DETAILS

STANDARD PLAN J-60.05-00

SHEET 2 OF 4 SHEETS

APPROVED FOR PUBLICATION

Pasco Bakotich III — STATE DESIGN ENGINEER — 06-16-11 DATE

Washington State Department of Transportation

Provided to Builders Exchange of WA, Inc. For usage Conditions Agreement see www.bxwa.com - Always Verify Scale

DRAWN BY: LISA CYFORD

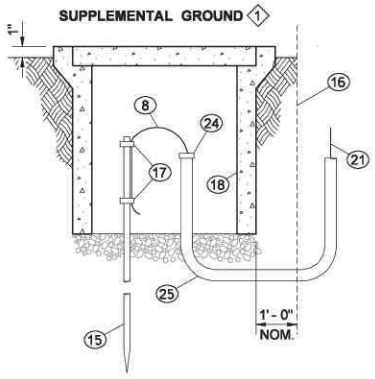

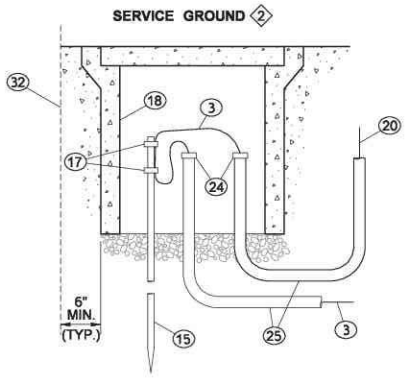

DETAIL A

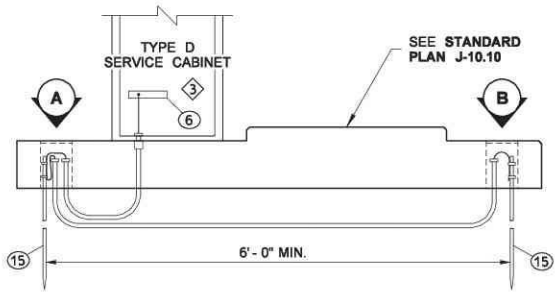

RIGID PVC CONDUIT (PVC) APPLICATION

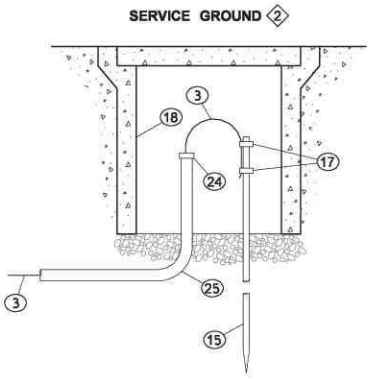

DETAIL B

SEE KEY ON SHEET 1 FOR PARTS

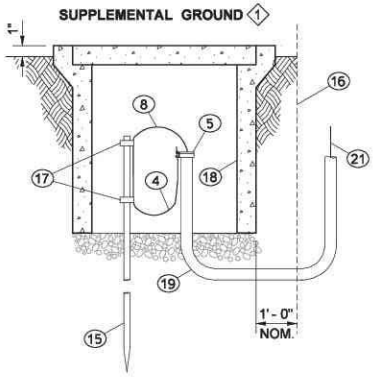

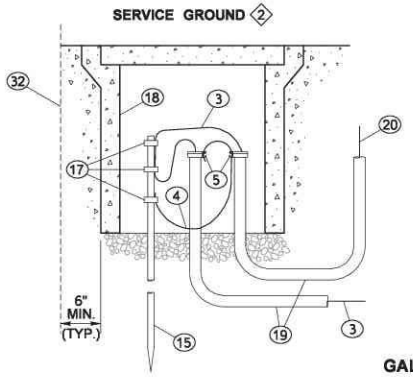

DETAIL C

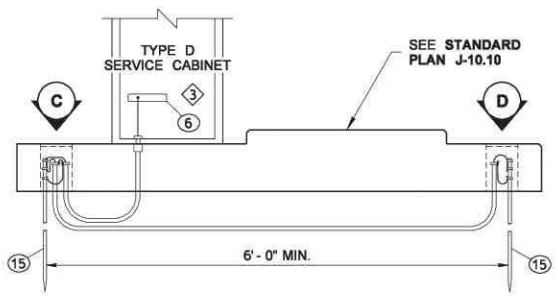

GALVANIZED STEEL RIGID METAL CONDUIT (RMC) APPLICATION

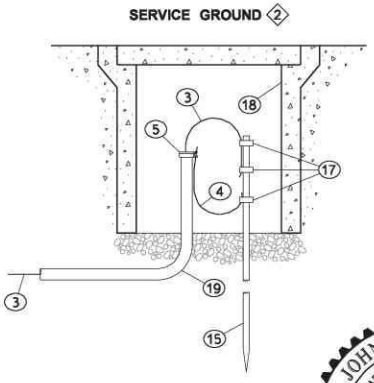

DETAIL D

1. Required to supplement equipment grounding for luminaire standards with direct burial aerial feeds, or where required in the plans
2. Required at all service and separately derived systems
3. Type D service cabinet shown. Use this concept for Type E cabinet or transformer. Type D service cabinet shall be installed on lower surface of foundation only. Type B service cabinet and transformer cabinet shall be installed on raised surface of foundation only.
4. Type B modified service cabinet
5. Grounding electrode conductor and equipment grounding conductor shall not be routed through lug on grounding bushing.

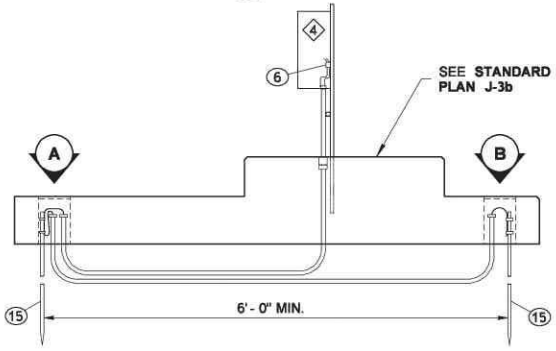

RIGID PVC CONDUIT (PVC) APPLICATION

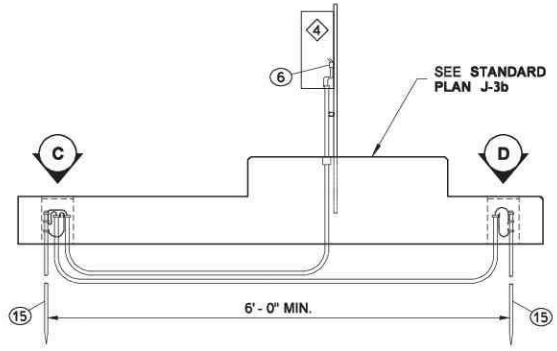

GALVANIZED STEEL RIGID METAL CONDUIT (RMC) APPLICATION

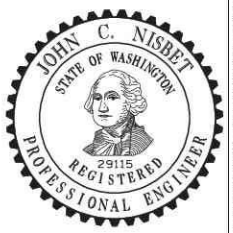

NOTE: THIS PLAN IS NOT A LEGAL ENGINEERING DOCUMENT BUT AN ELECTRONIC DUPLICATE. THE ORIGINAL, SIGNED BY THE ENGINEER AND APPROVED FOR PUBLICATION, IS KEPT ON FILE AT THE WASHINGTON STATE DEPARTMENT OF TRANSPORTATION. A COPY MAY BE OBTAINED UPON REQUEST.

TYPICAL GROUNDING DETAILS

STANDARD PLAN J-60.05-00

SHEET 3 OF 4 SHEETS

APPROVED FOR PUBLICATION

Pasco Bakotich III — STATE DESIGN ENGINEER — 06-16-11 DATE

Washington State Department of Transportation

Provided to Builders Exchange of WA, Inc. For usage Conditions Agreement see www.bxwa.com - Always Verify Scale

DRAWN BY: LISA CYFORD

(1) 3/8" × 2" × 2" Frame Bonding Stud Plate with 1/4NC × 1" Stainless Steel Bonding Stud.
- Weld Bonding Stud to Frame Bonding Plate.
- Weld to lid support frame.
- 1/4" weld ~ 3 sides.
- Grind lid bearing surface flat after welding.
- All corners rounded. Corners along exposed sheared or cut edges shall be broken by light grinding to achieve an approximate 1/16" (inch) chamfer or rounding.
- Protect conductors with fireproof cloth prior to welding.
- Omit Frame Bonding Stud Plate if the Frame Bonding point already exists.

(2) Weld all around lid bonding stud ~ 1/4 NC × 1" stainless steel ~ liberally coat entire assembly w/ anti-seize compound.

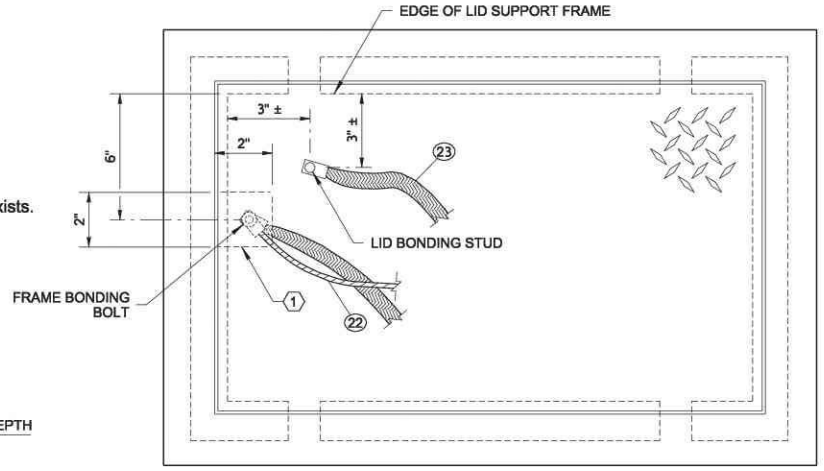

PLAN

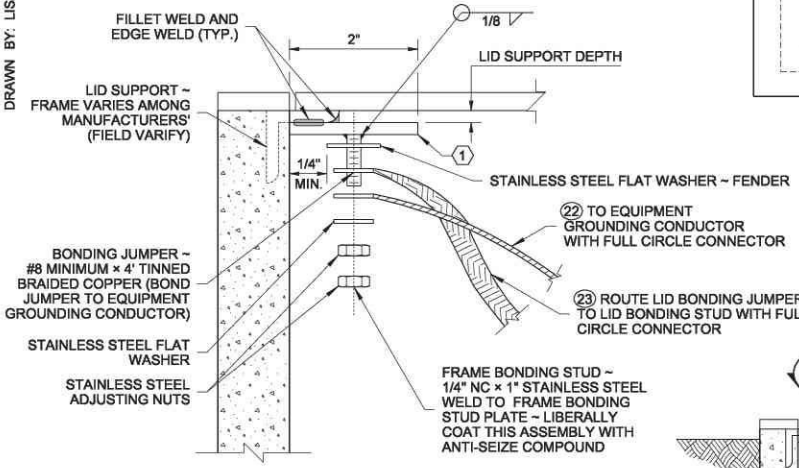

FRAME BONDING DETAIL (A)

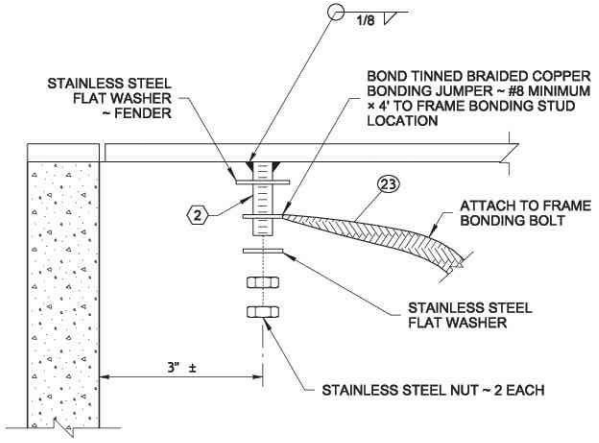

LID BONDING DETAIL (B)

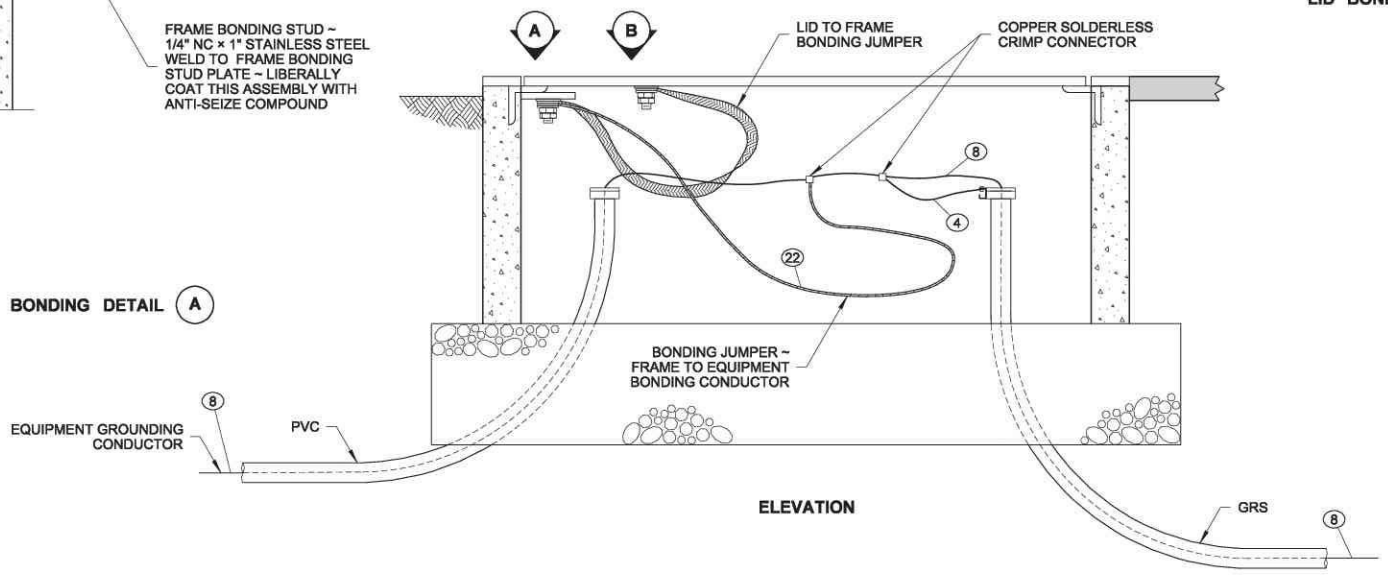

ELEVATION

JOHN C. NISBET
STATE OF WASHINGTON
29115
REGISTERED
PROFESSIONAL ENGINEER

NOTE: THIS PLAN IS NOT A LEGAL ENGINEERING DOCUMENT BUT AN ELECTRONIC DUPLICATE. THE ORIGINAL, SIGNED BY THE ENGINEER AND APPROVED FOR PUBLICATION, IS KEPT ON FILE AT THE WASHINGTON STATE DEPARTMENT OF TRANSPORTATION. A COPY MAY BE OBTAINED UPON REQUEST.

TYPICAL GROUNDING DETAILS

STANDARD PLAN J-60.05-00

SHEET 4 OF 4 SHEETS

APPROVED FOR PUBLICATION

Pasco Bakotich III — STATE DESIGN ENGINEER — 06-16-11 — DATE

Washington State Department of Transportation

Provided to Builders Exchange of WA, Inc. For usage Conditions Agreement see www.bxwa.com - Always Verify Scale

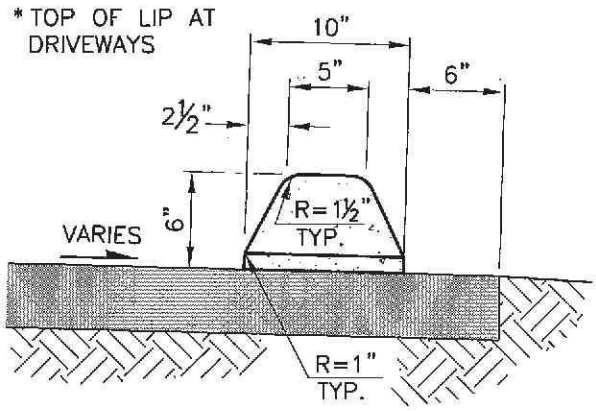

EXTRUDED ASPHALT OR CEMENT CONCRETE CURB ③⑤

NOTE:
FACE OF CURB SHALL NOT EXCEED FACE OF GUARDRAIL

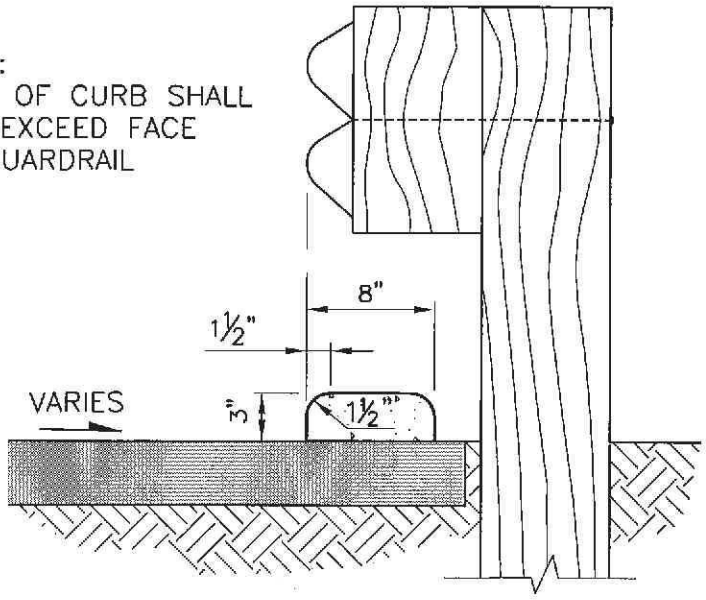

EXTRUDED CONCRETE CURB UNDER GUARDRAIL ⑥

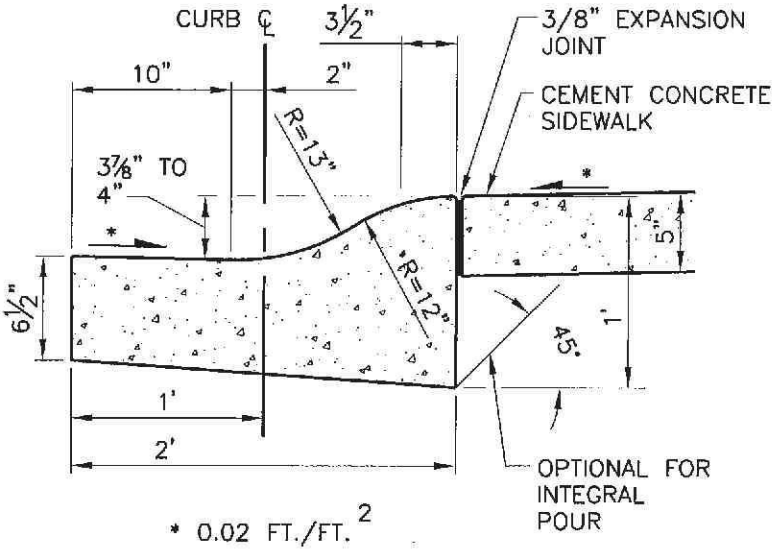

CEMENT CONCRETE ROLLED CURB

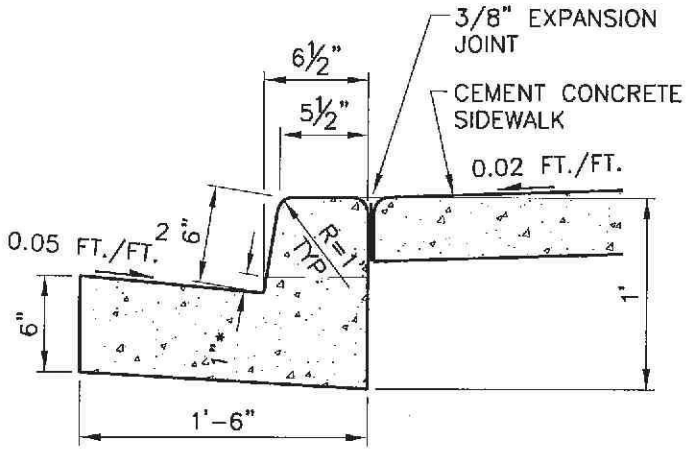

CEMENT CONCRETE VERTICAL CURB & GUTTER

NOTES

1. SEE SEC. 3.04 K.C.R.S. FOR JOINT REQUIREMENTS.
2. ROLL GUTTER TO MATCH POSITIVE SUPERELEVATION.
3. SEE FIG. NO. 2-005 FOR CONFIGURATION OF FILL AND WALKWAY BEHIND CURB IF REQUIRED.
4. 1 IN. EDGED GROOVE MAY REPLACE 3/8 IN. EXPANSION JOINT AT INTERFACE BETWEEN CURB AND ADJACENT SIDEWALK FOR SEPERATE POUR CONSTRUCTION.
5. SEE SEC. 3.03 FOR EXTRUDED CURB ANCHORAGE.

Provided to Builders Exchange of WA, Inc. For usage Conditions Agreement see www.bxwa.com - Always Verify Scale

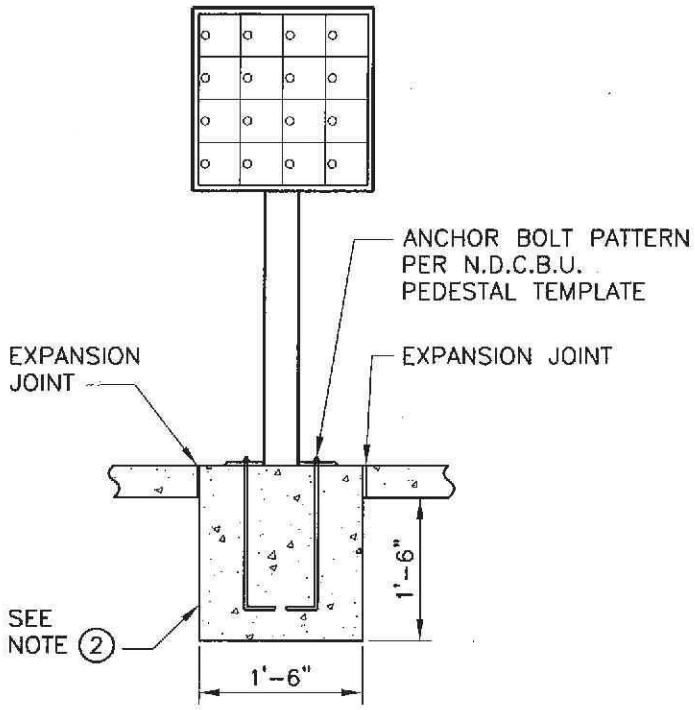

FRONT

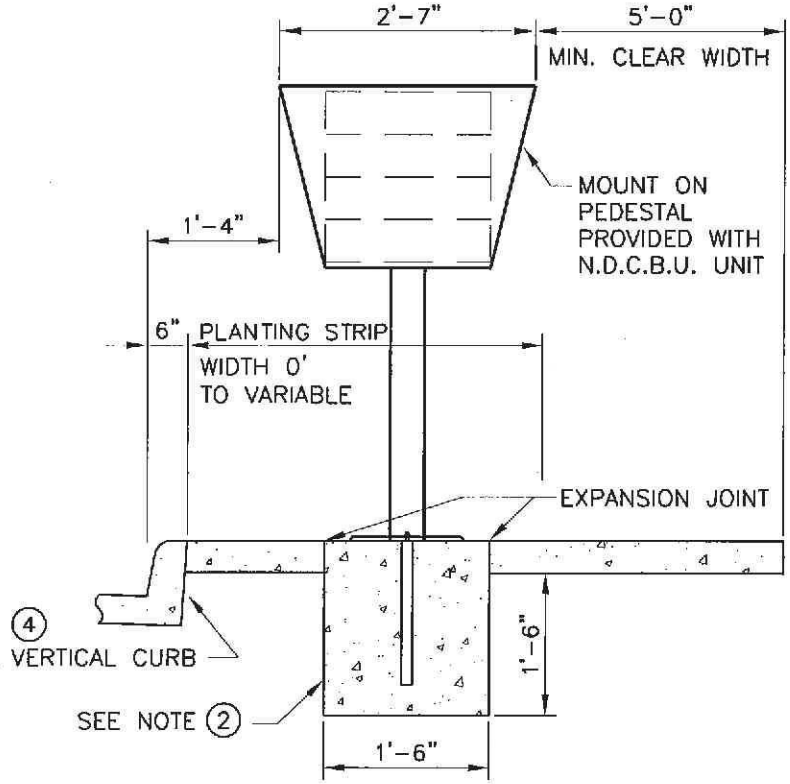

SIDE

NOTES:

1. SEE SEC. 5.04

(2) INSTALLATION OF N.D.C.B.U. (INCLUDING CONSTRUCTION OF BASE) WILL BE DONE BY U.S. POSTAL SERVICE.

3. SEE SEC. 3.04 FOR JOINT REQUIREMENTS.

(4) WHEN A N.D.C.B.U. IS INSTALLED ALONG A ROLLED CURB SECTION, IT SHALL COMPLY WITH SECTION 5.10

(N.D.C.B.U.) MAILBOX INSTALLATION NEIGHBORHOOD DELIVERY AND COLLECTION BOX UNIT (4 OF 4)

Provided to Builders Exchange of WA, Inc. For usage Conditions Agreement see www.bxwa.com - Always Verify Scale

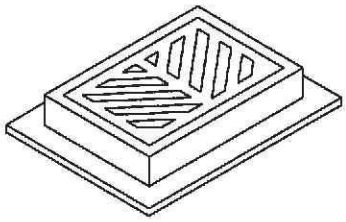

FRAME AND GRATE
SEE SEC. 7.05 AND APPLICABLE DETAILS.

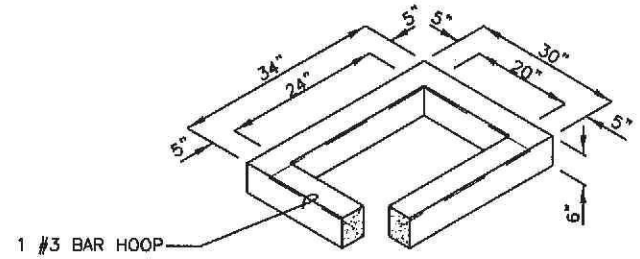

6" RISER SECTION

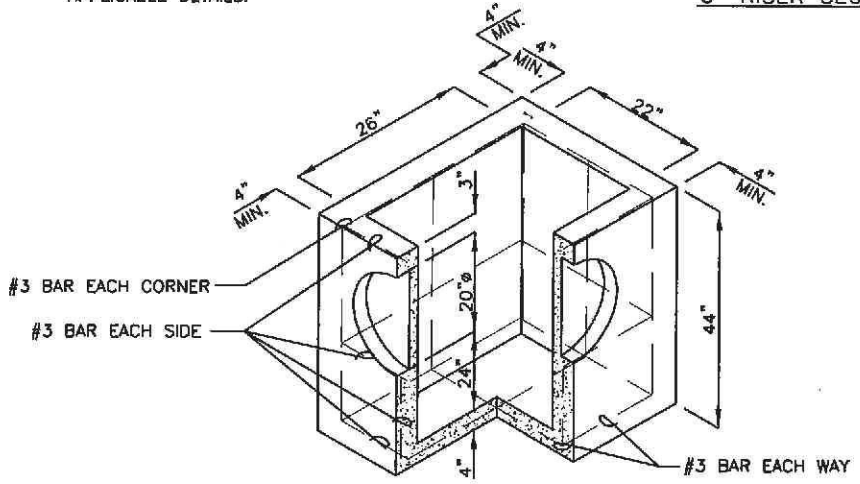

PRECAST BASE SECTION
(MEASUREMENT AT THE TOP OF THE BASE)

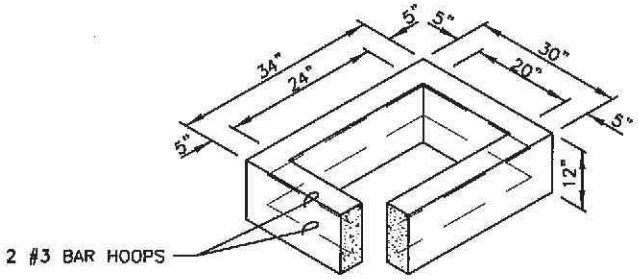

12" RISER SECTION

NOTES:

1. CATCH BASINS SHALL BE CONSTRUCTED IN ACCORDANCE WITH ASTM C478 (AASTO M 199) & C890 UNLESS OTHERWISE SHOWN ON PLANS OR NOTED IN THE WSDOT/APWA STANDARD SPECIFICATIONS.
2. AS AN ACCEPTABLE ALTERNATIVE TO REBAR, WELDED WIRE FABRIC HAVING A MIN. AREA OF 0.12 SQ. IN. PER FT. MAY BE USED. WELDED WIRE FABRIC SHALL COMPLY TO ASTM A497 (AASHTO M 221). WIRE FABRIC SHALL NOT BE PLACED IN KNOCKOUTS.
3. ALL REINFORCED CAST-IN-PLACE CONCRETE SHALL BE CLASS 4000.
4. PRECAST BASES SHALL BE FURNISHED WITH CUTOUTS OR KNOCKOUTS. KNOCKOUTS SHALL HAVE A WALL THICKNESS OF 2 IN. MIN. ALL PIPE SHALL BE INSTALLED IN FACTORY PROVIDED KNOCKOUTS. UNUSED KNOCKOUTS NEED NOT BE GROUTED IF WALL IS LEFT INTACT.
5. KNOCKOUT OR CUTOUT HOLE SIZE IS EQUAL TO PIPE OUTER DIAM. PLUS CATCH BASIN WALL THICKNESS.
6. ROUND KNOCKOUTS MAY BE ON ALL 4 SIDES, WITH MAX. DIAM. OF 20 IN. KNOCKOUTS MAY BE EITHER ROUND OR "D" SHAPE.
7. THE MAX. DEPTH FROM THE FINISHED GRADE TO THE PIPE INVERT IS 5 FT.
8. THE TAPER ON THE SIDES OF THE PRECAST BASE SECTION AND RISER SECTION SHALL NOT EXCEED 1/2" PER FT.
9. CATCH BASIN FRAME AND GRATE SHALL BE IN ACCORDANCE WITH STANDARD SPECIFICATIONS AND MEET THE STRENGTH REQUIREMENTS OF FEDERAL SPECIFICATION RR-F-621D. MATING SURFACES SHALL BE FINISHED TO ASSURE NON-ROCKING FIT WITH ANY COVER POSITION.
10. FRAME AND GRATE MAY BE INSTALLED WITH FLANGE DOWN OR CAST INTO RISER.
11. FOR CATCH BASINS IN PARKING LOTS REFER TO WSDOT/APWA STANDARD DWG. B1-b.
12. EDGE OF RISER OR BRICK SHALL NOT BE MORE THAN 2 IN. FROM VERTICAL EDGE OF CATCH BASIN WALL.

Provided to Builders Exchange of WA, Inc. For usage Conditions Agreement see www.bxwa.com - Always Verify Scale

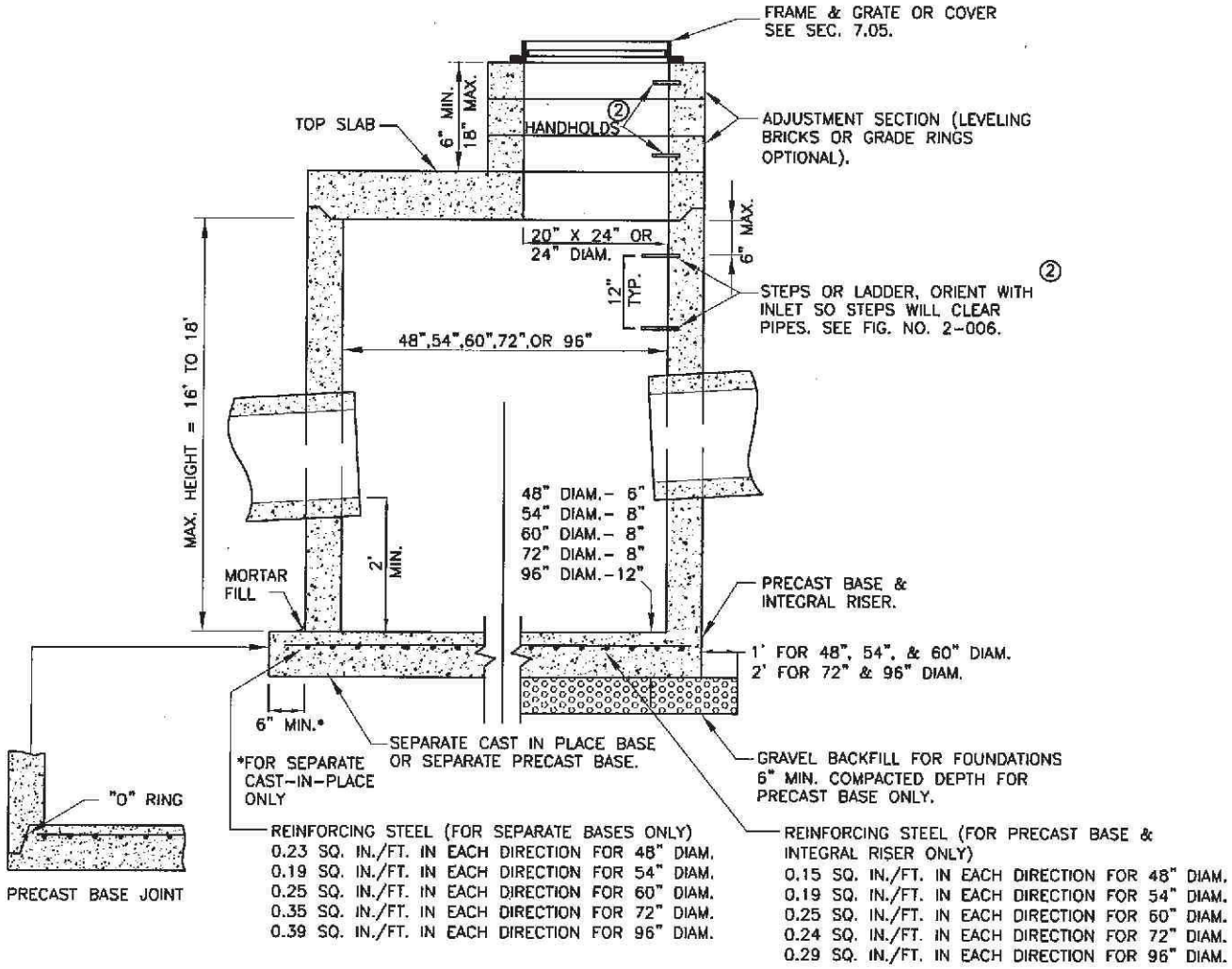

NOTES:

1. CATCH BASINS SHALL BE CONSTRUCTED IN ACCORDANCE WITH ASTM C478 (AASHTO M199) AND ASTM C890 UNLESS OTHERWISE SHOWN ON PLANS OR NOTED IN THE WSDOT/APWA STANDARD SPECIFICATIONS.

② HANDHOLDS IN ADJUSTMENT SECTION SHALL HAVE 3" MIN. CLEARANCE. STEPS IN CATCH BASIN SHALL HAVE 6" MIN. CLEARANCE. SEE FIG. NO. 7-006, CATCH BASIN DETAILS. HANDHOLDS SHALL BE PLACED IN ALTERNATING GRADE RINGS OR LEVELING BRICK COURSE WITH A MIN. OF ONE HANDHOLD BETWEEN THE LAST STEP AND TOP OF THE MANHOLE.

3. ALL REINFORCED CAST-IN-PLACE CONCRETE SHALL BE CLASS 4000. ALL PRECAST CONCRETE SHALL BE CLASS 4000.

4. PRECAST BASES SHALL BE FURNISHED WITH CUTOUTS OR KNOCKOUTS. KNOCKOUTS SHALL HAVE WALL THICKNESS OF 2 IN. MIN. UNUSED KNOCKOUTS NEED NOT BE GROUTED IF WALL IS LEFT INTACT. PIPES SHALL BE INSTALLED ONLY IN FACTORY KNOCKOUTS UNLESS OTHERWISE APPROVED BY THE ENGINEER.

5. KNOCKOUT OR CUTOUT HOLE SIZE SHALL EQUAL PIPE OUTER DIAM. PLUS CATCH BASIN WALL THICKNESS. MAX. HOLE SIZE SHALL BE 36 IN. FOR 48 IN. CATCH BASIN, 42 IN. FOR 54 IN. C.B., 48 IN. FOR 60 IN. C.B., 60 IN. FOR 72 IN. C.B., 84 IN. FOR 96 IN. C.B. MIN. DISTANCE BETWEEN HOLES SHALL BE 8 IN. FOR 48 IN., 54 IN. AND 60 IN. C.B.; 12 IN. FOR 72 IN. AND 96 IN. C.B.

6. CATCH BASIN FRAMES AND GRATES OR COVERS SHALL BE IN ACCORDANCE WITH SEC. 7.05 AND MEET THE STRENGTH REQUIREMENTS OF FEDERAL SPECIFICATION RR-F-621D. MATING SURFACES SHALL BE FINISHED TO ASSURE NON-ROCKING FIT WITH ANY COVER POSITION.

7. ALL BASE REINFORCING STEEL SHALL HAVE A MIN. YIELD STRENGTH OF 60,000 PSI AND BE PLACED IN THE UPPER HALF OF THE BASE WITH 1 IN. MIN. CLEARANCE.

8. MIN. SOIL BEARING VALUE SHALL EQUAL 3,300 POUNDS PER SQUARE FOOT.

9. FOR DETAILS SHOWING LADDER, STEPS, HANDRAILS AND TOP SLABS. SEE FIG. 7-006.

10. SEE THE WSDOT/APWA STANDARD SPECIFICATIONS SEC. 7-05.3 FOR JOINT REQUIREMENTS.

Provided to Builders Exchange of WA, Inc. For usage Conditions Agreement see www.bxwa.com - Always Verify Scale

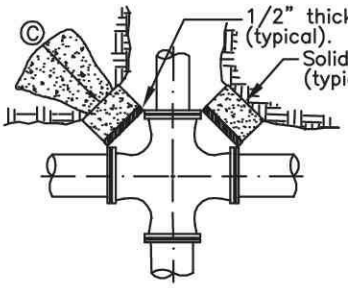

UNBALANCED CROSS

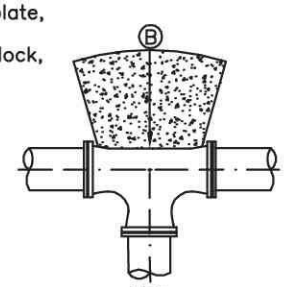

TEE

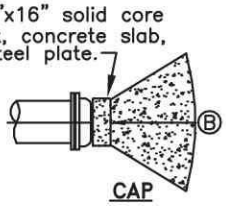

CAP

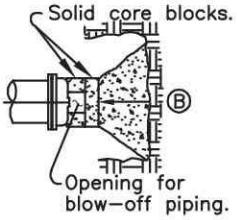

TAPPED CAP/PLUG

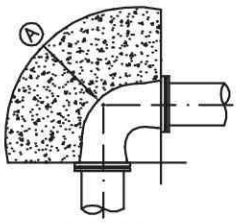

90° BEND

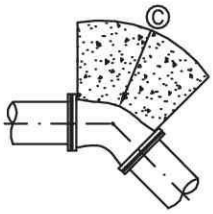

45° BEND

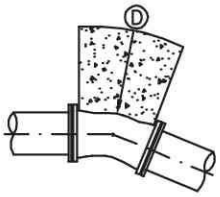

22½° BEND

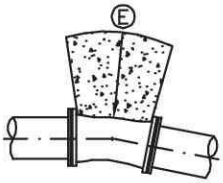

11¼° BEND

General Notes:

1. Concrete thrust block area based upon a safe bearing load of 2000/(3000) Lbs. per Sq. Ft.
2. Areas must be adjusted for other size pipe, pressures and soil conditions.
3. Concrete blocking shall be cast–in–place and have minimum of 1/2 square foot contact bearing against the fitting.
4. Block shall bear against fittings only and shall be clear of joints to permit taking up or dismantling joint.
5. Contractor shall install blocking adequate to withstand test pressure as well as to continuously withstand operating pressure under all conditions of service.
6. Polyethylene wrap not shown for clarity.
7. In muck or peat, all thrusts shall be restrained by piles or tie rods to solid foundations or by removal of muck or peat and replacement with ballast of sufficient stability to resist thrusts.

THRUST BLOCK SIZING FOR 250 PSI PRESSURE

Min. Bearing Area Against Undisturbed Soil–Sq. Ft.

PIPE SIZE	Ⓐ	Ⓑ	Ⓒ	Ⓓ	Ⓔ
4"	3/(2)	2/(1)	2/(1)	1/(1)	1/(1)
6"	6/(4)	4/(3)	3/(2)	2/(1)	1/(1)
8"	10/(7)	7/(5)	5/(4)	3/(2)	2/(1)
10"	15/(10)	11/(7)	8/(5)	4/(3)	2/(2)
12"	22/(14)	15/(10)	12/(8)	6/(4)	3/(2)
14"	29/(20)	21/(14)	16/(11)	8/(5)	4/(3)
16"	38/(26)	27/(18)	21/(14)	11/(7)	5/(4)
18"	48/(32)	34/(23)	26/(18)	13/(9)	7/(5)
20"	60/(40)	42/(28)	32/(22)	17/(11)	8/(6)
24"	86/(58)	61/(41)	47/(31)	24/(16)	12/(8)

SAFE BEARING LOADS IN LBS./SQ. FT.

The safe bearing loads given in the following table are for horizontal thrusts when the depth of cover over the pipe exceeds 2 feet.

SOIL	SAFE BEARING LOAD
*Muck, peat, etc.(See note 7.)	0
Soft clay	1,000
Sand	2,000
Sand and gravel	3,000
Sand and gravel cemented w/clay	4,000
Hard shale	10,000

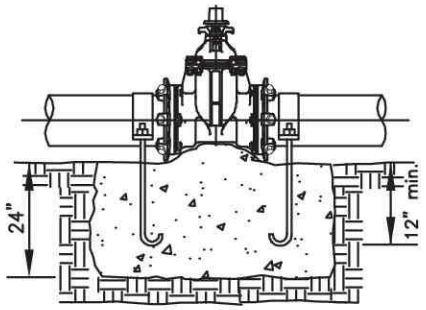

INLINE VALVE – PROFILE

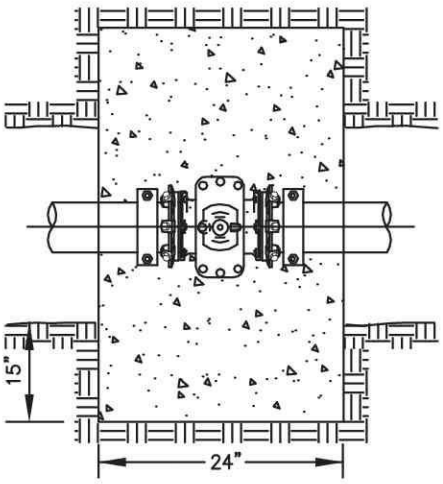

INLINE VALVE – PLAN

Notes:

1. Concrete blocking is based on 250 psi water pressure and 2500 psi concrete strength.
2. Hardware not embedded in concrete shall be cleaned and coated with coal tar epoxy.
3. In–line valve shall be M.J. x M.J. and be restrained with Mega–Lugs, or equal.

CONCRETE BLOCKING - HORIZONTAL

NOT TO SCALE

Detail Approvals	NORTHSHORE UTILITY DISTRICT	1
Engineer GSM	STANDARD WATER DETAILS	
Manager DPK		February 2014 W–1(HorizBlocking).dwg

Provided to Builders Exchange of WA, Inc. For usage Conditions Agreement see www.bxwa.com - Always Verify Scale

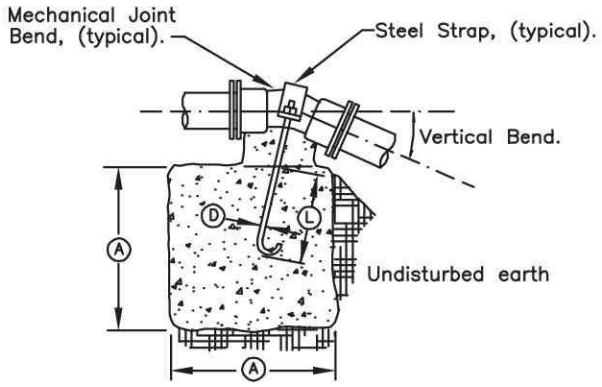

BLOCKING FOR 11–1/4°, 22–1/2° & 30° VERTICAL BENDS

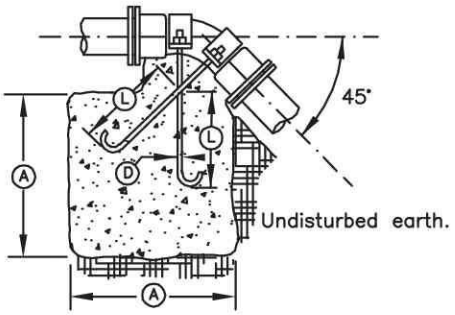

BLOCKING FOR 45° VERTICAL BENDS

VERTICAL BLOCKING

PIPE SIZE	VERT. BEND	CU.FT.	Ⓐ	Ⓓ	Ⓛ
4"	11–1/4°	8	2.0'	3/4"	1.5'
	22–1/2°	11	2.2'	3/4"	2.0'
	30°	17	2.6'	3/4"	2.0'
	45°	30	3.1'	3/4"	2.0'
6"	11–1/4°	11	2.2'	3/4"	2.0'
	22–1/2°	25	2.9'	3/4"	2.0'
	30°	41	3.5'	3/4"	2.0'
	45°	68	4.1'	3/4"	2.0'
8"	11–1/4°	16	2.5'	3/4"	2.0'
	22–1/2°	47	3.6'	3/4"	2.5'
	30°	70	4.1'	3/4"	2.5'
	45°	123	5.0'	3/4"	2.0'
12"	11–1/4°	32	3.2'	3/4"	2.0'
	22–1/2°	88	4.5'	7/8"	3.0'
	30°	132	5.1'	7/8"	2.5'
	45°	232	6.1'	3/4"	2.5'
16"	11–1/4°	70	4.1'	7/8"	3.0'
	22–1/2°	184	5.7'	1–1/8"	4.0'
	30°	275	6.5'	1–1/4"	4.0'
	45°	478	7.8'	1–1/8"	4.0'
20"	11–1/4°	91	4.5'	7/8"	3.0'
	22–1/2°	225	6.1'	1–1/4"	4.0'
	30°	330	6.9'	1–3/8"	4.5'
	45°	560	8.2'	1–1/4"	4.0'
24"	11–1/4°	128	5.0'	1"	3.5'
	22–1/2°	320	6.8'	1–3/8"	4.5'
	30°	480	7.9'	1–5/8"	5.5'
	45°	820	9.4'	1–3/8"	4.5'

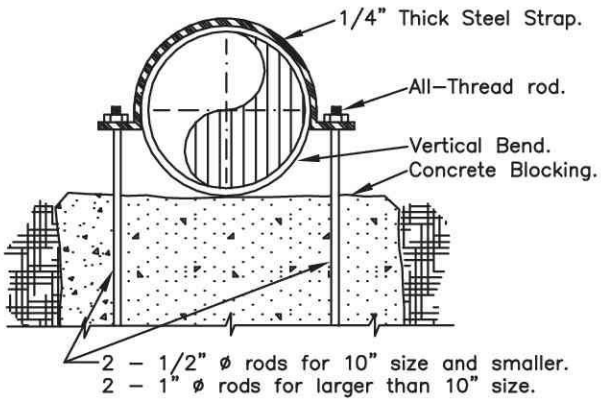

TYPICAL CROSS–SECTION

Notes:

1. Concrete blocking is based on 250 psi water pressure and 2500 psi concrete strength.
2. Bolts and nuts not embedded in concrete shall be cleaned and coated with coal tar epoxy.
3. Polyethylene wrap not shown for clarity.

CONCRETE BLOCKING - VERTICAL

NOT TO SCALE

Detail Approvals
Engineer GSM
Manager DPK

NORTHSHORE UTILITY DISTRICT
STANDARD WATER DETAILS

2

February 2014
W–2(VertBlocking).dwg

Provided to Builders Exchange of WA, Inc. For usage Conditions Agreement see www.bxwa.com - Always Verify Scale

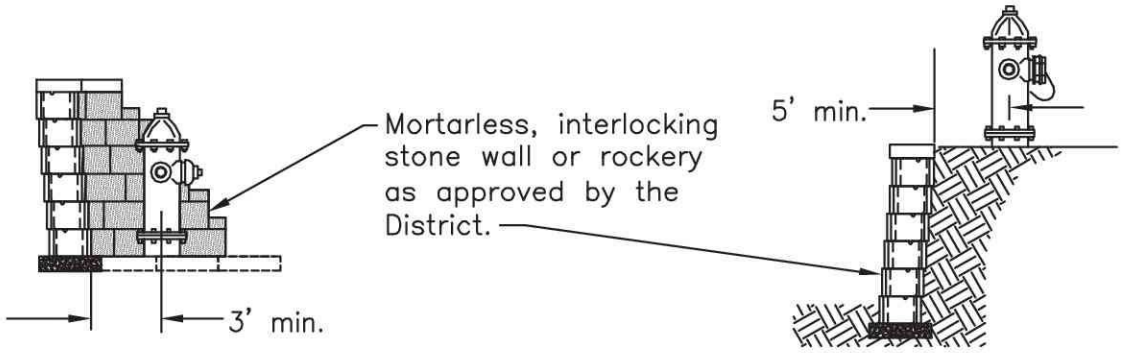

FIRE HYDRANT IN CUT

FIRE HYDRANT IN FILL

FIRE HYDRANT LOCATION IN CUT OR FILL

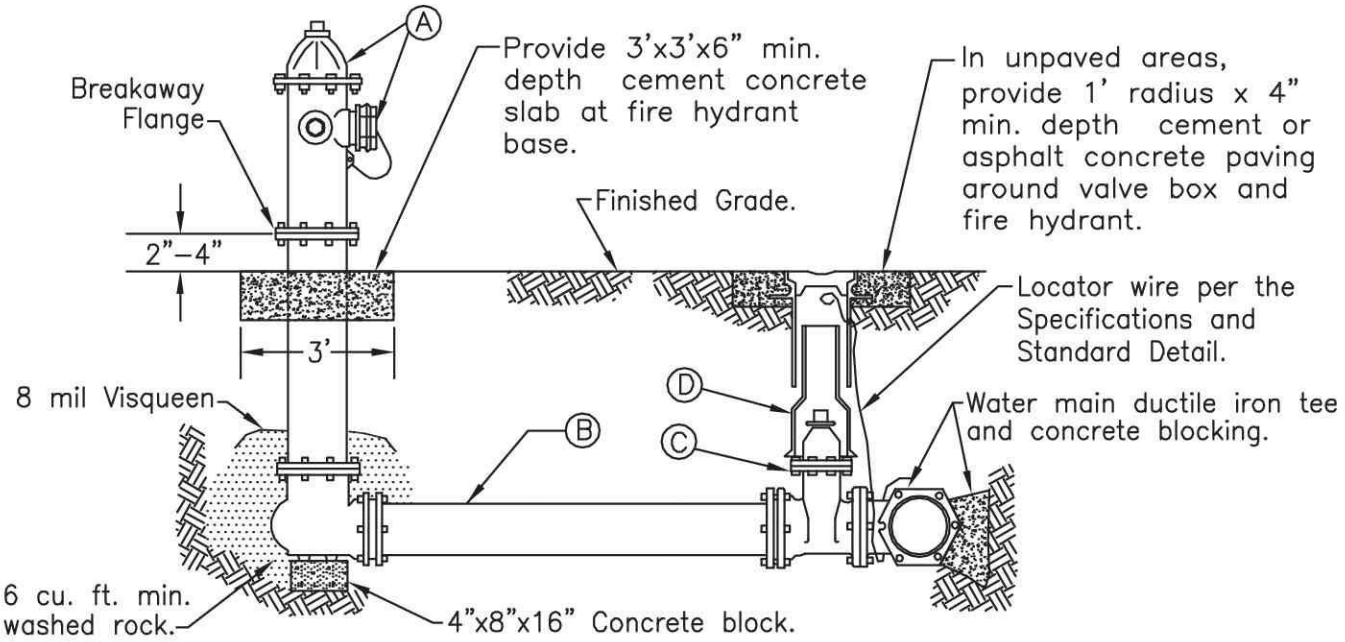

MATERIALS LIST

ITEM	DESCRIPTION
Ⓐ	Hydrant: Shall be Mueller Super Centurion, American Darling B–62–B, Clow Medallion, M&H 929 or AVK Nostalgic in conformance with AWWA Standard Specification C–502. Provide Storz adapters as follows: 4" for Bothell and King Co. F.D. #16, 5" for Kirkland and none required for City of Woodinville. Hydrant shall be prime coated with Steelcote SR53 heavy duty brush type enamel. Top coat shall be two brush coats of Sherwin/Williams White Industrial Enamel #B54W101.
Ⓑ	6" Cl. 52 D.I. pipe, 3' min. and 50' max. with restrained joints.
Ⓒ	6" R.W. Gate valve, F.L.xR.J.: Shall be per the Specifications.
Ⓓ	Two–piece valve box per the Specifications and Standard Detail.

Notes:

1. Hydrant shall be oriented per Fire Marshall and have 3' min. clearance around centerline.
2. Gate valve operating nut shall be 2' minimum and 4'–6" maximum from finished grade.
3. Bollards required only on private property.

FIRE HYDRANT ASSEMBLY

NOT TO SCALE

Detail Approvals		NORTHSHORE UTILITY DISTRICT STANDARD WATER DETAILS	3
Engineer	GSM		February 2014 W–3(Hydrant).dwg
Manager	DPK		

Provided to Builders Exchange of WA, Inc. For usage Conditions Agreement see www.bxwa.com - Always Verify Scale

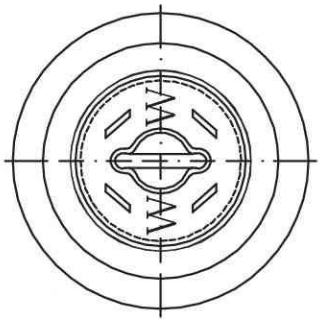

PLAN

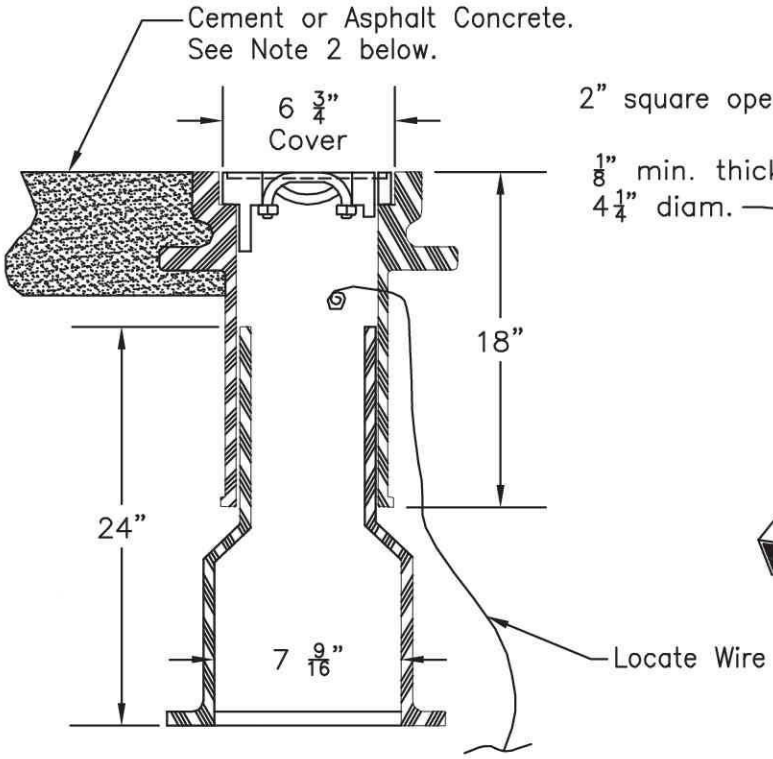

VALVE BOX

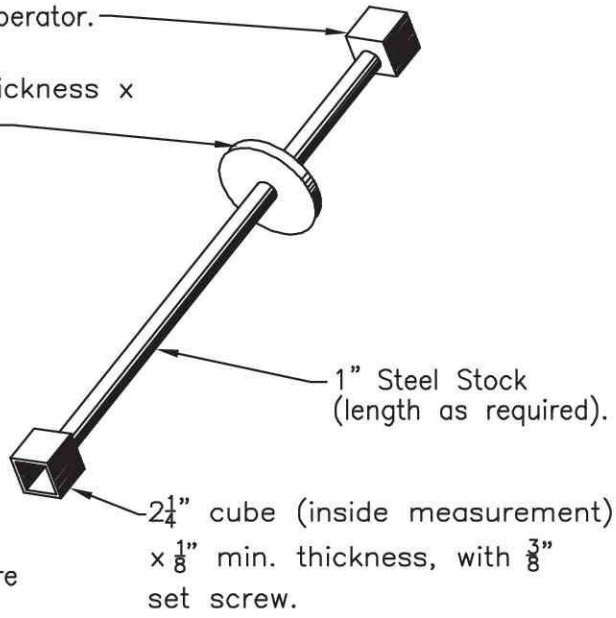

VALVE OPERATING NUT EXTENSION

Notes:
1. Cast–iron valve box shall be Olympic Foundry part number 045.
2. If valve box is in an unpaved area, provide 1' radius x 4" minimum depth cement or asphalt concrete paving around valve box.

Notes:
1. Length as required to put operating nut two (2) feet from finished grade.
2. Extensions are required when valve nut is more 4.5' below finished grade.
3. Extensions to be a minimum of one (1) foot long.
4. One (1) Extension per valve.

VALVE BOX & OPERATING NUT EXTENSION

NOT TO SCALE

Detail Approvals	NORTHSHORE UTILITY DISTRICT STANDARD WATER DETAILS	11 February 2014 W–11(ValveBox).dwg
Engineer GSM		
Manager DPK		

Provided to Builders Exchange of WA, Inc. For usage Conditions Agreement see www.bxwa.com - Always Verify Scale

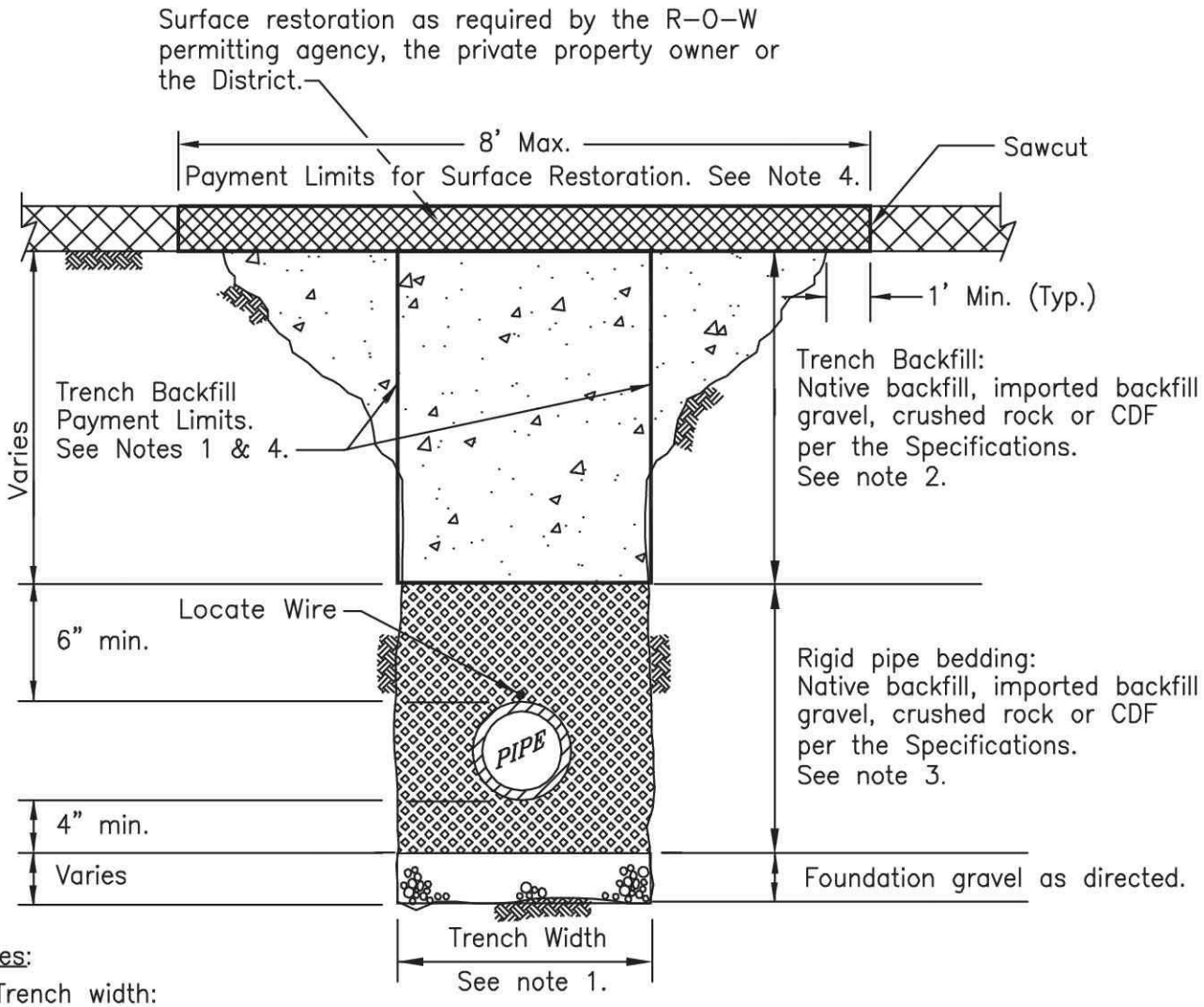

Notes:

1. Trench width:
   Minimum: Pipe O.D. + 12" (6" each side of pipe).
   Maximum: 40" for 15"ø pipe and smaller.
   (1-1/2 x I.D.) + 18" for 18"ø pipe and larger.
   The neat-line payment limits for trench backfill materials shall be based upon the maximum allowable trench width as shown above.

2. Native material, if allowed for trench backfill, shall meet the requirements of select borrow per the Specifications. Trench backfill shall be compacted to a minimum of ninety-five percent (95%) of Modified Proctor in the Right-Of-Way and improved easements and to ninety percent (90%) in unimproved easement areas. See the Specifications for additional information.

3. Native material, if allowed for rigid pipe bedding, shall be sand and gravel with no material larger than 1-1/2". See the Specifications for additional information.

4. The neat-line limits shown will be used to calculate the maximum quantity of trench backfill and surface restoration materials allowed. Payment for bedding gravel will be considered incidental to payment made for pipe. Payment for foundation rock will be based upon the quantities used as directed by the District. See the Contract documents for additional information.

TYPICAL TRENCH SECTION & PAYMENT LIMITS

NOT TO SCALE

Detail Approvals	NORTHSHORE UTILITY DISTRICT STANDARD WATER DETAILS	12
Engineer GSM		February 2014
Manager DPK		W-12(TypicalTrench).dwg

Provided to Builders Exchange of WA, Inc. For usage Conditions Agreement see www.bxwa.com - Always Verify Scale

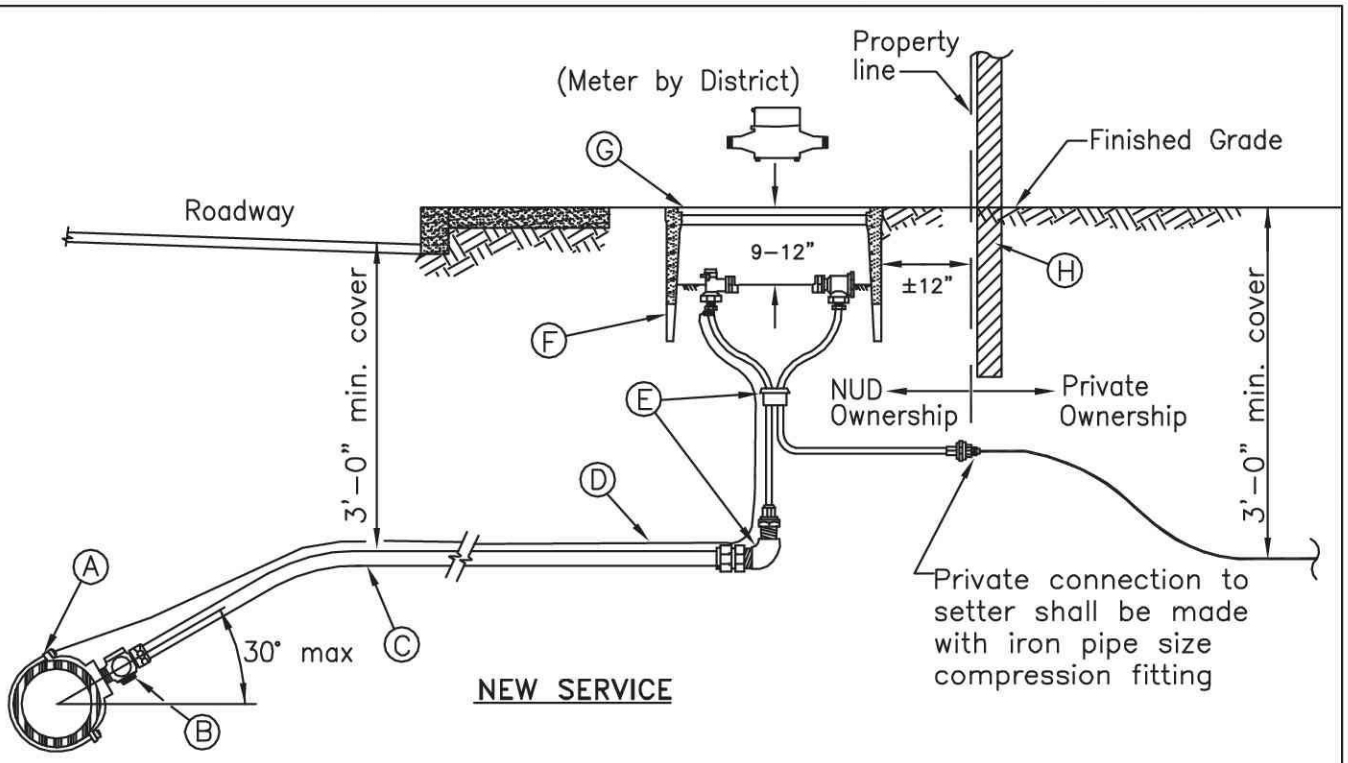

MATERIALS LIST

ITEM	DESCRIPTION
Ⓐ	Saddle: Stainless steel single strap with epoxy coated ductile iron casting and CC threads. Saddle shall be Ford FC101, Romac 101NS, Mueller DR1S, or District approved equal. Direct tap of ductile iron, Cl. 52 or greater, is allowed.
Ⓑ	1" corporation stop, CCxPack Joint with 2" maximum length stainless steel stiffener. Ford F1001 or approved equal.
Ⓒ	1" polyethylene pipe per the Specifications. SIDR 7, 200 psi rating. Pipe shall be continuous from corporation stop to meter setter. All polyethylene pipe installed by open–cut construction shall be bedded in 5/8" crushed rock or sand, 2" over and under.
Ⓓ	Locator wire: 14 gauge copper, continuous, solid core, neoprene coated per the Specifications. Connection at the meter setter shall be made with an all stainless steel hose clamp. Connection at the main line wire shall be made with a split–bolt connector. Strip coating prior to connection.
Ⓔ	1" meter setter: Ford VBH94–15W–11–44ZA, A.Y. McDonald 762–415WCDD 44X15, or Mueller 391B24104–2–12N with 1" 90° brass elbow, MIPxMIP, and 1" adapter, FIPxPack Joint, or equal.
Ⓕ	Meter box: ARMORCAST, A6001946PCX12 (no "mouse holes")
Ⓖ	Cover: ARMORCAST, A6001969RCI–H10
Ⓗ	2"x4"x6, marker post. Bury 3'. Paint white with "Water" stenciled in blue paint.

NOTE: If required for premise isolation, an approved backflow assembly shall be installed immediately behind the water meter per District Standard Detail #14.

1" WATER SERVICE

NOT TO SCALE

Detail Approvals	
Engineer	GSM
Manager	DPK

NORTHSHORE UTILITY DISTRICT
STANDARD WATER DETAILS

4

February 2014
W–4(1WaterService).dwg

Provided to Builders Exchange of WA, Inc. For usage Conditions Agreement see www.bxwa.com - Always Verify Scale

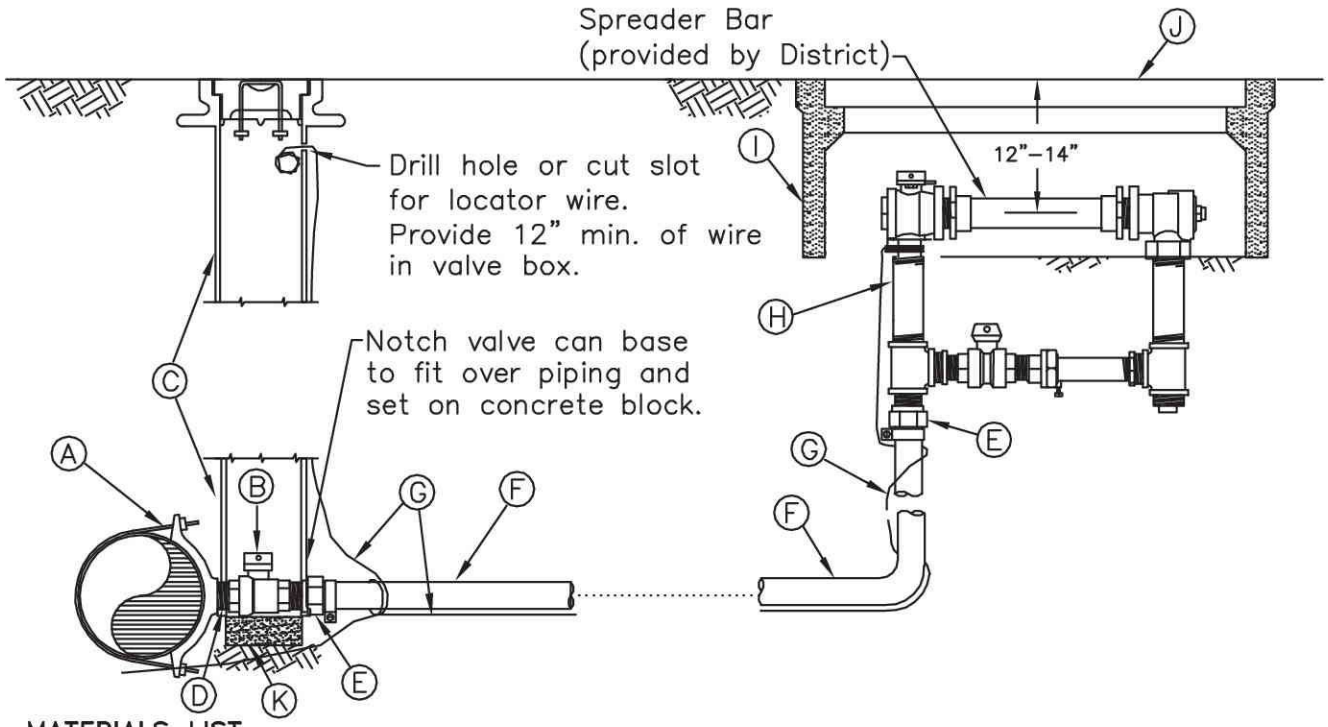

MATERIALS LIST

ITEM DESCRIPTION

Ⓐ Saddle: Stainless steel double strap with ductile iron casting and 1–1/2" or 2" IPS tap. Saddle shall be Ford FC202, Romac 202NS, Mueller DR2S, or District approved equal.

Ⓑ Ball valve, FIPxFIP, Ford #B11–666 for 1–1/2" and Ford #B11–777 for 2"; with 2" operating nut, Ford #QT–67.

Ⓒ Two–piece cast iron valve box per the Specifications and Standard Detail.

Ⓓ Brass nipple, MIPxMIP, length to fit.

Ⓔ Adapter, MIPxPack Joint, Ford #C86–66 for 1–1/2" and Ford #C86–77 for 2".

Ⓕ Polyethylene pipe per the Specifications. SIDR 7, 200 psi rating. Pipe shall be continuous from ball valve to meter setter. All polyethylene pipe installed by open–cut construction shall be bedded in 5/8" crushed rock or sand, 2" over and under.

Ⓖ Locator wire: 14 gauge copper, continuous, solid core, neoprene coated per the Specifications. Connection at the meter setter shall be made with an all stainless steel hose clamp. Connection at the main line wire shall be made with a split–bolt connector. Strip coating prior to connection.

Ⓗ 1–1/2" meter setter: Ford VBH8612B. 2" meter setter: Ford VBH8712B.

Ⓘ Meter box: ARMORCAST, A6001640PCX12 (no "mouse holes")

Ⓙ Cover: ARMORCAST, A6001947TRCI–H10

Ⓚ 4"x8"x16" concrete block.

NOTE: If required for premise isolation, an approved backflow assembly shall be installed immediately behind the water meter per District Standard Detail #14.

1-1/2" and 2" WATER SERVICE

NOT TO SCALE

Detail Approvals	NORTHSHORE UTILITY DISTRICT STANDARD WATER DETAILS	5
Engineer GSM		
Manager DPK		February 2014 W–5(1.5_2WaterService).dwg

Provided to Builders Exchange of WA, Inc. For usage Conditions Agreement see www.bxwa.com - Always Verify Scale

VIII. AMENDMENTS TO STANDARD SPECIFICATIONS

Provided to Builders Exchange of WA, Inc. For usage Conditions Agreement see www.bxwa.com - Always Verify Scale

INTRODUCTION

The following Amendments and Special Provisions shall be used in conjunction with the 2014 Standard Specifications for Road, Bridge, and Municipal Construction.

AMENDMENTS TO THE STANDARD SPECIFICATIONS

The following Amendments to the Standard Specifications are made a part of this Contract and supersede any conflicting provisions of the Standard Specifications. For informational purposes, the date following each Amendment title indicates the implementation date of the Amendment or the latest date of revision.

Each Amendment contains all current revisions to the applicable section of the Standard Specifications and may include references which do not apply to this particular project.

Section 1-01, Definitions and Terms
August 3, 2015

1-01.3 Definitions

The definition for "**Engineer**" is revised to read:

The Contracting Agency's representative who directly supervises the engineering and administration of a construction Contract.

The definition for "**Inspector**" is revised to read:

The Engineer's representative who inspects Contract performance in detail.

The definition for "**Project Engineer**" is revised to read:

Same as Engineer.

The following new term and definition is inserted after the definition for "**Proposal Form**":

Reference Information – Information provided to the Contractor by the Contracting Agency that is not part of the Contract.

The definition for "**Working Drawings**" is revised to read:

Drawings, Plans, diagrams, or any other supplementary data or calculations, including a schedule of submittal dates for Working Drawings where specified, which the Contractor must submit to the Engineer.

Section 1-02, Bid Procedures and Conditions
August 3, 2015

1-02.8(1) Noncollusion Declaration

The third paragraph is revised to read:

Provided to Builders Exchange of WA, Inc. For usage Conditions Agreement see www.bxwa.com - Always Verify Scale

Therefore, by including the Noncollusion Declaration as part of the signed Bid Proposal, the Bidder is deemed to have certified and agreed to the requirements of the Declaration.

1-02.9 Delivery of Proposal

This Section is revised to read:

For projects scheduled for Bid opening in Olympia, the Proposal shall be sealed and submitted in the envelope provided with it to the address below or shall be submitted electronically via Trns·Port Expedite® software and BidExpress®. The Bidder shall fill in all blanks on this envelope to ensure proper handling and delivery. Bids are to be received no later than until 11:00:59 A.M. Pacific time on the date of Bid opening:

Washington State Department of Transportation
Room 2D20
310 Maple Park Avenue SE
Olympia WA 98501-2361

For projects scheduled for Bid opening in other locations the Proposal shall be sealed and submitted in the envelope provided with it at the location and time identified in the Special Provisions. The Bidder shall fill in all blanks on this envelope to ensure proper handling and delivery.

Proposals that are received as required will be publicly opened and read as specified in Section 1-02.12. The Contracting Agency will not open or consider any Proposal when the Proposal or Bid deposit is received after the time specified for receipt of Proposals or received in a location other than that specified for receipt of Proposals.

When a Bid deposit is furnished in a physical format as specified in Section 1-02.7 the Bid deposit shall be submitted in a sealed envelope marked as "BID SUPPLEMENT" and with the Bidder's company name, project title, and Bid date.

1-02.10 Withdrawing, Revising, or Supplementing Proposal

The first sentence of the third paragraph is revised to read:

Unless specifically allowed in the Contract, emailed requests to withdraw, revise, or supplement a Proposal are not acceptable.

1-02.13 Irregular Proposals

This Section is revised to read:

1. A Proposal will be considered irregular and may be rejected if:

   a. The Bidder is not prequalified;

   b. The Bidder adds provisions reserving the right to reject or accept the Award, or enter into the Contract;

   c. A price per unit cannot be determined from the Bid Proposal;

Provided to Builders Exchange of WA, Inc. For usage Conditions Agreement see www.bxwa.com - Always Verify Scale

d. The Proposal Form is not properly executed;

e. The Bidder fails to submit or properly complete a Subcontractor list, if applicable, as required in Section 1-02.6;

f. The Bidder fails to submit or properly complete a Disadvantaged Business Enterprise Utilization Certification, if applicable, as required in Section 1-02.6;

g. The Bidder fails to submit written confirmation from each DBE firm listed on the Bidder's completed Disadvantaged Business Enterprise Utilization Certification that they are in agreement with the Bidder's DBE participation commitment, if applicable, as required in Section 1-02.6, or if the written confirmation that is submitted fails to meet the requirements of the Special Provisions;

h. The Bidder fails to submit Disadvantaged Business Enterprise Good Faith Effort documentation, if applicable, as required in Section 1-02.6, or if the documentation that is submitted fails to demonstrate that a Good Faith Effort to meet the Condition of Award was made; or

i. The Bid Proposal does not constitute a definite and unqualified offer to meet the material terms of the Bid invitation.

2. A Proposal may be considered irregular and may be rejected if:

a. The Proposal does not include a unit price for every Bid item;

b. Any of the unit prices are excessively unbalanced (either above or below the amount of a reasonable Bid) to the potential detriment of the Contracting Agency;

c. The authorized Proposal Form furnished by the Contracting Agency is not used or is altered;

d. The completed Proposal Form contains any unauthorized additions, deletions, alternate Bids, or conditions;

e. Receipt of Addenda is not acknowledged;

f. A member of a joint venture or partnership and the joint venture or partnership submit Proposals for the same project (in such an instance, both Bids may be rejected); or

g. If Proposal Form entries are not made in ink.

Section 1-03, Award and Execution of Contract
January 5, 2015

1-03.3 Execution of Contract

The first paragraph is revised to read:

Provided to Builders Exchange of WA, Inc. For usage Conditions Agreement see www.bxwa.com - Always Verify Scale

Within 20 calendar days after the Award date, the successful Bidder shall return the signed Contracting Agency-prepared Contract, an insurance certification as required by Section 1-07.18, and a satisfactory bond as required by law and Section 1-03.4, and shall be registered as a Contractor in the State of Washington.

1-03.4 Contract Bond

The last word of item 3 is deleted.

Item 4 is renumbered to 5.

The following is inserted after item 3 (after the preceding Amendments are applied):

4. Be conditioned upon the payment of taxes, increases, and penalties incurred on the project under Titles 50, 51, and 82 RCW; and

1-03.5 Failure to Execute Contract

The first sentence is revised to read:

Failure to return the insurance certification and bond with the signed Contract as required in Section 1-03.3, or failure to provide Disadvantaged, Minority or Women's Business Enterprise information if required in the Contract, or failure or refusal to sign the Contract, or failure to register as a Contractor in the State of Washington shall result in forfeiture of the Proposal bond or deposit of this Bidder.

Section 1-04, Scope of the Work
August 3, 2015

1-04.3 Vacant

This Section, including title, is revised to read:

1-04.3 Reference Information

Reference Information provided to the Contractor is not part of the Contract. The Contracting Agency does not guarantee the accuracy of the Reference Information and is not responsible for the content of the Reference Information in any manner. Any use of Reference Information by the Contractor is done solely at the Contractor's risk.

1-04.4 Changes

In the third paragraph, item number 1 and 2 are revised to read:

A. When the character of the Work as altered differs materially in kind or nature from that involved or included in the original proposed construction; or

B. When an item of Work, as defined elsewhere in the Contract, is increased in excess of 125 percent or decreased below 75 percent of the original Contract quantity. For the purpose of this Section, an item of Work will be defined as any item that qualifies for adjustment under the provisions of Section 1-04.6.

The following two new sentences are inserted at the beginning of the eighth paragraph:

Provided to Builders Exchange of WA, Inc. For usage Conditions Agreement see www.bxwa.com - Always Verify Scale

Within 14 calendar days of delivery of the change order the Contractor shall endorse and return the change order, request an extension of time for endorsement or respond in accordance with Section 1-04.5. The Contracting Agency may unilaterally process the change order if the Contractor fails to comply with these requirements.

The last two paragraphs are deleted.

This Section is supplemented with the following new subsections:

1-04.4(2) Value Engineering Change Proposal (VECP)

1-04.4(2)A General

A VECP is a Contractor proposed change to the Contract Provisions which will accomplish the projects functional requirements in a manner that is equal to or better than the requirements in the Contract. The VECP may be: (1) at a less cost or time, or (2) either no cost savings or a minor increase in cost with a reduction in Contract time. The net savings or added costs to the Contract Work are shared by the Contractor and Contracting Agency.

The Contractor may submit a VECP for changing the Plans, Specifications, or other requirements of the Contract. The Engineer's decision to accept or reject all or part of the proposal is final and not subject to arbitration under the arbitration clause or otherwise subject to litigation.

The VECP shall meet all of the following:

1. Not adversely affect the long term life cycle costs.

2. Not adversely impact the ability to perform maintenance.

3. Provide the required safety and appearance.

4. Provide substitution for deleted or reduced Disadvantaged Business Enterprise Condition of Award Work, Apprentice Utilization and Training.

VECPs that provide a time reduction shall meet the following requirements:

1. Time saving is a direct result of the VECP.

2. Liquidated damages penalties are not used to calculate savings.

3. Administrative/overhead cost savings experienced by either the Contractor or Contracting Agency as a result of time reduction accrue to each party and are not used to calculate savings.

1-04.4(2)B VECP Savings

1-04.4(2)B1 Proposal Savings

The incentive payment to the Contractor shall be one-half of the net savings of the proposal calculated as follows:

Provided to Builders Exchange of WA, Inc. For usage Conditions Agreement see www.bxwa.com - Always Verify Scale

1. (gross cost of deleted Work) – (gross cost of added Work) = (gross savings)

2. (gross savings) – (Contractor's engineering costs) – (Contracting Agency's costs) = (net savings)

3. (net savings) / 2 = (incentive pay)

The Contracting Agency's costs shall be the actual consultant costs billed to the Contracting Agency and in-house costs. Costs for personnel assigned to the Engineer's office shall not be included.

1-04.4(2)B2 Added Costs to Achieve Time Savings

The cost to achieve the time savings shall be calculated as follows:

1. (cost of added Work) + (Contractor's engineering costs - Contracting Agency's engineering costs) = (cost to achieve time savings)

2. (cost to achieve time savings) / 2 = (Contracting Agency's share of added cost)

If the timesaving proposal also involves deleting Work and, as a result, creates a savings for the Contracting Agency, then the Contractor shall also receive one-half of the savings realized through the deletion.

1-04.4(2)C VECP Approval

1-04.4(2)C1 Concept Approval

The Contractor shall submit a written proposal to the Engineer for consideration. The proposal shall contain the following information:

1. An explanation outlining the benefit provided by the change(s).

2. A narrative description of the proposed change(s). If applicable, the discussion shall include a demonstration of functional equivalency or a description of how the proposal meets the original Contract scope of Work.

3. A cost discussion estimating any net savings. Savings estimates will generally follow the outline below under the Section, "Proposal Savings".

4. A statement providing the Contracting Agency with the right to use all or any part of the proposal on future projects without future obligation or compensation.

5. A statement acknowledging and agreeing that the Engineer's decision to accept or reject all or part of the proposal is final and

Provided to Builders Exchange of WA, Inc. For usage Conditions Agreement see www.bxwa.com - Always Verify Scale

not subject to arbitration under the arbitration clause or otherwise be subject to claims or disputes.

6. A statement giving the dates the Engineer must make a decision to accept or reject the conceptual proposal, the date that approval to proceed must be received, and the date the Work must begin in order to not delay the Contract. If the Contracting Agency does not approve the VECP by the date specified by the Contractor in their proposal the VECP will be deemed rejected.

7. The submittal will include an analysis on other Work that may have costs that changed as a result of the VECP. Traffic control and erosion control shall both be included in addition to any other impacted Work.

After review of the proposal, the Engineer will respond in writing with acceptance or rejection of the concept. This acceptance shall not be construed as authority to proceed with any change Contract Work. Concept approval allows the Contractor to proceed with the Work needed to develop final Plans and other information to receive formal approval and to support preparation of a change order.

1-04.4(2)C2 Formal Approval

The Contractor's submittal to the Engineer for formal approval shall include the following:

1. Deleted Work – Include the calculated quantities of unit price Work to be deleted. Include the proposed partial prices for portions of lump sum Work deleted. For deletion of force account items include the time and material estimates.

2. Added Work – Include the calculated quantities of unit price Work to be added, either by original unit Contract prices or by new, negotiated unit prices. For new items of Work include the quantities and proposed prices.

3. Contractor's Engineering Costs – Submit the labor costs for the engineering to develop the proposal; costs for Contractor employees utilized in Contract operations on a regular basis shall not be included.

4. Schedule Analysis – If the VECP is related to time savings, the Contractor shall submit a partial progress schedule showing the changed Work. The submittal shall also include a discussion comparing the partial progress schedule with the approved progress schedule for the project.

5. Working Drawings – Type 3 Working Drawings shall be submitted; those Drawings which require engineering shall be a Type 3E.

Provided to Builders Exchange of WA, Inc. For usage Conditions Agreement see www.bxwa.com - Always Verify Scale

Formal approval of the proposal will be documented by issuance of a change order. The VECP change order will contain the following statements which the Contractor agrees to by signing the change order:

1. The Contractor accepts design risk of all features, both temporary and permanent, of the changed Work.

2. The Contractor accepts risk of constructability of the changed Work.

3. The Contractor provides the Contracting Agency with the right to use all or any part of the proposal on future projects without further obligation or compensation.

VECP change orders will contain separate pay items for the items that are applicable to the Proposal. These are as follows:

1. Deleted Work.

2. Added Work.

3. The Contractor's engineering costs, reimbursed at 100 percent of the Contractor's cost.

4. Incentive payment to the Contractor.

When added Work costs exceed Deleted Work costs, but time savings make a viable proposal, then items 3 and 4 above are replaced with the following:

3. The Contracting Agency's share of added cost to achieve time savings.

4. The Contractor's share of savings from deleted Work.

1-04.4(2)C3 Authority to Proceed with Changed Work

The authority for the Contractor to proceed with the VECP Work will be provided by one of the following options:

1. Execution of the VECP change order, or

2. At the Contractor's request the Contracting Agency may provide approval by letter from the Engineer for the Work to proceed prior to execution of a change order. All of the risk for proceeding with the VECP shall be the responsibility of the Contractor. Additionally, the following criteria are required to have been met:

   a) Concept approval has been granted by the Contracting Agency.

   b) All design reviews and approvals have been completed, including Plans and Specifications.

Provided to Builders Exchange of WA, Inc. For usage Conditions Agreement see www.bxwa.com - Always Verify Scale

c) The Contractor has guaranteed, in writing, the minimum savings to the Contracting Agency.

1-04.4(1) Minor Changes

The first sentence of the first paragraph is revised to read:

Payments or credits for changes amounting to $25,000 or less may be made under the Bid item "Minor Change".

1-04.5 Procedure and Protest by the Contractor

The first sentence of the first paragraph is revised to read:

The Contractor accepts all requirements of a change order by: (1) endorsing it, (2) writing a separate acceptance, (3) not responding within the allotted time as outlined in Section 1-04.4, or (4) not protesting in the way this Section provides.

Section 1-05, Control of Work
August 4, 2014

1-05.1 Authority of the Engineer

In this Section, "Project Engineer" is revised to read "Engineer".

The second paragraph (up until the colon) is revised to read:

The Engineer's decisions will be final on all questions including the following:

The first sentence in the third paragraph is revised to read:

The Engineer represents the Contracting Agency with full authority to enforce Contract requirements.

1-05.2 Authority of Assistants and Inspectors

The first paragraph is revised to read:

The Engineer may appoint assistants and Inspectors to assist in determining that the Work and materials meet the Contract requirements. Assistants and Inspectors have the authority to reject defective material and suspend Work that is being done improperly, subject to the final decisions of the Engineer.

In the third paragraph, "Project Engineer" is revised to read "Engineer".

1-05.3 Plans and Working Drawings

This Section's title is revised to read:

Working Drawings

This Section is revised to read:

Provided to Builders Exchange of WA, Inc. For usage Conditions Agreement see www.bxwa.com - Always Verify Scale

The Contract may require the Contractor to submit Working Drawings for the performance of the Work. Working Drawings shall be submitted by the Contractor electronically to the Engineer in PDF format; drawing details shall be prepared in accordance with conventional detailing practices. If the PDF format is found to be unacceptable, at the request of the Engineer, the Contractor shall provide paper copies of the Working Drawings with drawings on 11 by 17 inch sheets and calculations/text on 8½ by 11 inch sheets.

Working Drawings will be classified under the following categories:

1. **Type 1** – Submitted for Contracting Agency information. Submittal must be received by the Contracting Agency a minimum of 7 calendar days before Work represented by the submittal begins.

2. **Type 2** – Submitted for Contracting Agency review and comment. Unless otherwise stated in the Contract, the Engineer will require up to 20 calendar days from the date the Working Drawing is received until it is returned to the Contractor. The Contractor shall not proceed with the Work represented by the Working Drawing until comments from the Engineer have been addressed.

3. **Type 2E** – Same as a Type 2 Working Drawing with Engineering as described below.

4. **Type 3** – Submitted for Contracting Agency review and approval. Unless otherwise stated in the Contract, the Engineer will require up to 30 calendar days from the date the Working Drawing is received until it is returned to the Contractor. The Contractor shall obtain the Engineer's written approval before proceeding with the Work represented by the Working Drawing.

5. **Type 3E** – Same as a Type 3 Working Drawing with Engineering as described below.

All Working Drawings shall be considered Type 3 Working Drawings except as specifically noted otherwise in the Contract. Unless designated otherwise by the Contractor, submittals of Working Drawings will be reviewed in the order they are received by the Engineer. In the event that several Working Drawings are received simultaneously, the Contractor shall specify the sequence in which they are to be reviewed. If the Contractor does not submit a review sequence for simultaneous Working Drawing submittals, the review sequence will be at the Engineer's discretion.

Working Drawings requiring Engineering, Type 2E and 3E, shall be prepared by (or under the direction of) a Professional Engineer, licensed under Title 18 RCW, State of Washington, and in accordance with WAC 196-23-020. Design calculations shall carry the Professional Engineer's signature and seal, date of signature, and registration number on the cover page. The cover page shall also include the Contract number, Contract title and sequential index to calculation page numbers.

If more than the specified number of days is required for the Engineer's review of any individual Working Drawing or resubmittal, an extension of time will be considered in accordance with Section 1-08.8.

Provided to Builders Exchange of WA, Inc. For usage Conditions Agreement see www.bxwa.com - Always Verify Scale

Review or approval of Working Drawings shall neither confer upon the Contracting Agency nor relieve the Contractor of any responsibility for the accuracy of the Drawings or their conformity with the Contract. The Contractor shall bear all risk and all costs of any Work delays caused by rejection or nonapproval of Working Drawings.

Unit Bid prices shall cover all costs of Working Drawings.

Section 1-06, Control of Material
August 3, 2015

1-06.1(4) Fabrication Inspection Expense

This Section is revised to read:

In the event the Contractor elects to have items fabricated beyond 300 miles from Seattle, Washington, the Contracting Agency will deduct from monies due or that may become due to the Contractor all costs to perform plant approval and fabrication acceptance inspection for the items listed in Table 1 and costs for initial plant approval for items listed in Table 2. Plants currently listed on the QPL for the items shown in Table 1 and Table 2 in this Section do not require plant approval.

Table 1: Items Requiring Plant Approval and Fabrication Acceptance Inspection

Anchor Bolts (ASTM A449 & F1554 Grade 105)	Precast Concrete Vaults (Electrical, Utility, Drainage, etc.)
Bridge Bearings (Cylindrical, Disc, Fabric Pad, Low Rise, Pin, Pendulum, and Spherical)	Precast Concrete Girders and Precast Bridge Components
Cattle Guards	Prestressed Concrete Girders
Coated Piling and Casing	Prestressed Concrete Panels
Epoxy-Coated Reinforcing Steel	Precast Reinforced Concrete Box Culverts
Fabricated / Welded Miscellaneous Metal Drainage Items: Grate Inlets, and Drop Inlets	Precast Reinforced Concrete Split Box Culverts
Longitudinal Seismic Restrainers	Precast Reinforced Concrete Three Sided Structures
Metal Bridge Railing and Handrail	Prestressed Concrete Piles
Metal Castings for Concrete Drainage, electrical, and Utility Items	Retrofit Guardrail Posts with Welded Base Plates
Modular Expansion Joints	Signal Standards
Paint & Powder Coating Facilities for Table 1 items	Signing Material
Precast Concrete Bridge Deck Panels	Sign Structures – Cantilever , Sign Bridge, and Bridge Mounted, Roadside Type PLT / PLU
Precast Concrete Catch Basins, Manholes, Inlets, Drywells, and Risers	Soldier Piles
Precast Concrete Drain, Perforated Underdrain, Culvert, Storm Sewer, and Sanitary Sewer Pipe	Steel Bridges and Steel Bridge Components

Provided to Builders Exchange of WA, Inc. For usage Conditions Agreement see www.bxwa.com - Always Verify Scale

Precast Concrete Floor Panels	Steel Column Jackets
Precast Concrete Junction Boxes, Pull Boxes, Cable Vaults	Steel Light Standards, and High Mast Light Poles
Precast Concrete Marine Pier Deck Panels	Strip Seal Expansion Joints
Precast Concrete Pier Caps	Structural Steel for Ferry Terminal Berthing, Pedestrian and Vehicle Loading Structures
Precast Concrete Retaining Walls, including Lagging Panels	Timber Bridges
Precast Concrete Roof Panels	Treated Timber and Lumber 6 inch by 6 inch or larger
Precast Concrete Structural Earth Walls, Noise Barrier Walls, Wall Panels, and Wall Stem Panels	Welded Structural Steel (Miscellaneous)
Precast Concrete Traffic Barrier	

Table 2: Items Requiring Initial Plant Approval Only

Epoxy Coating of Dowels and Tiebars for Concrete Pavement	Precast Concrete Blocks for Structural Earth Walls
Guardrail Posts and Blocks	Steel Pipe Piling

The deductions for fabrication inspection costs will be as shown in the Payment Table below.

Zone	Place of Fabrication or Inspection Site	Reduction in Payment
1	Within 300 airline miles from Seattle	None*
2	Between 300 and 3,000 airline miles from Seattle	$700.00 per inspection day**
3	Over 3,000 airline miles from Seattle	$1,000 per inspection day,** but not less than $2,500 per trip

* Fabrication inspection expense does not apply for initial acceptance inspection in Zone 1. Re-inspection of items due to unacceptable workmanship or scheduling errors made by the Contractor, fabricator, or facility applying protective coatings will be assessed at $60.00 per hour but not less than $120.00 per inspection.

** An inspection day includes any calendar day or portion of a calendar day spent by one Inspector inspecting, on standby, or traveling to and from, a place of fabrication. An additional cost per inspection day will be assessed for each additional Inspector. Reimbursement will be assessed at $280.00 per day for weekends and holidays for each on site Inspector in travel status, but not engaged in inspection or travel activities when fabrication activities are not taking place.

Provided to Builders Exchange of WA, Inc. For usage Conditions Agreement see www.bxwa.com - Always Verify Scale

Where fabrication of an item takes place in more than one zone, the reduction in payment will be computed on the basis of the entire item being fabricated in the farthest of zones where any fabrication takes place on that item.

The rates for Zones 2 and 3 shall be applied for the full duration of time for all fabrication inspection activities, to include, but not be limited to: plant approvals, prefabrication meetings, fabrication, coatings, and final inspection. When an inspection is for more than one Contract the fabrication inspection costs shall be prorated as determined by the Engineer.

Section 1-07, Legal Relations and Responsibilities to the Public
August 3, 2015

1-07.1 Laws to be Observed

The third paragraph is supplemented with the following:

A copy of all Safety Plans (e.g., fall protection Work Plan) that are developed by the Contractor shall be submitted to the Engineer as a Type 1 Working Drawing. When requested by the Engineer, the Contractor shall provide training to WSDOT employees working on-site for any activity covered by a Safety Plan. Costs for training that is provided solely to Contracting Agency employees will be paid to the Contractor in accordance with Section 1-09.4.

1-07.2 State Taxes

This Section is revised to read:

The Washington State Department of Revenue has issued special rules on the State sales tax. Sections 1-07.2(1) through 1-07.2(3) are meant to clarify those rules. The Contracting Agency will not adjust its payment if the Contractor bases a Bid on a misunderstood tax liability.

The Contracting Agency may deduct from its payments to the Contractor, retainage or lien the bond, in the amount the Contractor owes the State Department of Revenue, whether the amount owed relates to the Contract in question or not. Any amount so deducted will be paid into the proper State fund on the Contractor's behalf. For additional information on tax rates and application refer to applicable RCWs, WACs or the Department of Revenue's website.

1-07.2(1) State Sales Tax: Work Performed on City, County, or Federally-Owned Land

This Section, including title, is revised to read:

1-07.2(1) State Sales Tax: WAC 458-20-171 – Use Tax

For Work designated as Rule 171, **Use Tax,** the Contractor shall include for compensation the amount of any taxes paid in the various unit Bid prices or other Contract amounts. Typically, these taxes are collected on materials incorporated into the project and items such as the purchase or rental of; tools, machinery, equipment, or consumable supplies not integrated into the project.

Provided to Builders Exchange of WA, Inc. For usage Conditions Agreement see www.bxwa.com - Always Verify Scale

The Summary of Quantities in the Contract Plans identifies those parts of the project that are subject to **Use Tax** under Section 1-07.2(1).

1-07.2(2) State Sales Tax: Work on State-Owned or Private Land

This Section, including title, is revised to read:

1-07.2(2) State Sales Tax: WAC 458-20-170 – Retail Sales Tax

For Work designated as Rule 170, **Retail Sales Tax,** the Contractor shall collect from the Contracting Agency, **Retail Sales Tax** on the full Contract price. The Contracting Agency will automatically add this **Retail Sales Tax** to each payment to the Contractor and for this reason; the Contractor shall not include the **Retail Sales Tax** in the unit Bid prices or in any other Contract amount. However, the Contracting Agency will not provide additional compensation to the Prime Contractor or Subcontractor for **Retail Sales Taxes** paid by the Contractor in addition to the **Retail Sales Tax** on the total Contract amount. Typically, these taxes are collected on items such as the purchase or rental of; tools, machinery, equipment, or consumable supplies not integrated into the project. Such sales taxes shall be included in the unit Bid prices or in any other Contract amounts.

The Summary of Quantities in the Contract Plans identifies those parts of the project that are subject to **Retail Sales Tax** under Section 1-07.2(2).

1-07.2(3) Services

This Section is revised to read:

Any Contract wholly for professional or other applicable services is generally not subject to **Retail Sales Tax** and therefore the Contractor shall not collect **Retail Sales Tax** from the Contracting Agency on those Contracts. Any incidental taxes paid as part of providing the services shall be included in the payments under the Contract.

1-07.15 Temporary Water Pollution/Erosion Control

This Section's title is revised to read:

1-07.15 Temporary Water Pollution Prevention

This Section's content is deleted.

1-07.23(1) Construction Under Traffic

In the second paragraph, the following new sentence is inserted after the second sentence:

Accessibility to existing or temporary pedestrian push buttons shall not be impaired.

Section 1-08, Prosecution and Progress
August 3, 2015

1-08.1 Subcontracting

The eighth paragraph is revised to read:

Provided to Builders Exchange of WA, Inc. For usage Conditions Agreement see www.bxwa.com - Always Verify Scale

On all projects, the Contractor shall certify to the actual amounts paid to Disadvantaged, Minority, Women's, or Small Business Enterprise firms that were used as Subcontractors, lower tier Subcontractors, manufacturers, regular dealers, or service providers on the Contract. This Certification shall be submitted to the Project Engineer on a monthly basis each month between Execution of the Contract and Physical Completion of the Contract using the application available at: https://remoteapps.wsdot.wa.gov/mapsdata/tools/dbeparticipation. The monthly report is due 20 calendar days following the end of the month. A monthly report shall be submitted for every month between Execution of the Contract and Physical Completion regardless of whether payments were made or Work occurred.

The ninth paragraph is deleted and replaced with the following new paragraph:

The Contractor shall comply with the requirements of RCW 39.04.250, 39.76.011, 39.76.020, and 39.76.040, in particular regarding prompt payment to Subcontractors. Whenever the Contractor withholds payment to a Subcontractor for any reason including disputed amounts, the Contractor shall provide notice to the Subcontractor with a copy to the Contracting Agency identifying the reason for the withholding and a clear description of what the Subcontractor must do to have the withholding released. Following receipt of a progress payment from the Contracting Agency, a Monthly Payment Summary form shall be submitted to the Engineer in PDF format within 20 calendar days. The Monthly Payment Summary shall include all Subcontractors that completed Work that was paid on the progress estimate by the Contracting Agency. Retainage withheld by the Contractor prior to completion of the Subcontractors Work is exempt from reporting as a payment withheld and is not included in the withheld amount. The Monthly Payment Summary form is available from the Engineer. The Contracting Agency's copy of the notice to Subcontractor for deferred payments shall be submitted with the Monthly Payment Summary.

1-08.1(1) Subcontract Completion and Return of Retainage Withheld

This Section is revised to read:

The following procedure shall apply to all subcontracts entered into as a part of this Contract:

Requirements

1. Upon request, the Engineer will provide a copy of any or all progress payment estimates, with regard to Contract payments to any interested party to the project.

2. The Contractor shall make payment to the Lower Tier Subcontractor not later than ten calendar days after receipt of payment for Work satisfactorily completed by the Lower Tier Subcontractor, to the extent of the Lower Tier Subcontractor's interest therein.

3. In the event the Contractor believes they have the right under the Contract or Subcontract to withhold payment in part or whole from a Lower Tier Subcontractor they shall provide immediate notification to that Lower Tier Subcontractor and the Engineer. The notice shall include an accounting of payments to date, the value and reason for the withheld amount, and an explanation of what must be done to have the withheld amount released.

Provided to Builders Exchange of WA, Inc. For usage Conditions Agreement see www.bxwa.com - Always Verify Scale

The Lower Tier Subcontractor shall be paid within eight calendar days after the Subcontractor completes the remedial action identified.

4. Every subcontract and lower tier subcontract shall have a dispute resolution process incorporated for resolving issues between the parties to the subcontract, or one shall be established as necessary.

5. If the parties agree, the WSDOT will make a third party neutral available provided the parties to the dispute agree that the cost of doing so is split between them.

6. The Engineer will withhold the same amount of funds from the Contractor as was withheld if the issue is not resolved by the next progress estimate.

7. Failure by a Contractor or Subcontractor to comply with these requirements may result in one or more of the following:

   a) Reflected in the Prime Contractor's Performance Evaluation.

   b) Cancellation, termination or suspension of the Contract, in whole or in part.

   c) Sanctions as provided by the Contract; subcontract; or by law under applicable prompt payment statutes including RCW 39.04.250.

8. The Subcontractor shall make a written request to the Contractor for the release of the Subcontractor's retainage or retainage bond.

9. Within 10 calendar days of the request, the Contractor shall determine if the subcontract has been satisfactorily completed including any required lien releases, documentation and material testing and shall inform the Subcontractor, in writing, of the Contractor's determination.

10. If the Contractor determines that the subcontract has been satisfactorily completed, the Subcontractor's retainage or retainage bond shall be released by the Contractor within 10 calendar days from the date of the written notice. If the Contractor determines that the Subcontractor has not achieved satisfactory completion of the subcontract, the Contractor must provide the Subcontractor with written notice, stating specifically why the subcontract Work is not satisfactorily completed and what has to be done to achieve completion. The Contractor shall release the Subcontractor's retainage or retainage bond within 10 calendar days after the Subcontractor has satisfactorily completed the Work identified in the notice.

11. In determining whether satisfactory completion has been achieved, the Contractor may require the Subcontractor to provide documentation such as certifications and releases, showing that all laborers, lower-tiered Subcontractors, suppliers of material and equipment, and others involved in the Subcontractor's Work have been paid in full. The Contractor may also require any documentation from the Subcontractor that is required by the subcontract or by the Contract between the Contractor and Contracting

Provided to Builders Exchange of WA, Inc. For usage Conditions Agreement see www.bxwa.com - Always Verify Scale

Agency or by law such as affidavits of wages paid, material acceptance certifications and releases from applicable governmental agencies to the extent that they relate to the Subcontractor's Work.

12. If the Contractor fails to comply with the requirements of the Specification and the Subcontractor's retainage or retainage bond is wrongfully withheld, the Subcontractor may seek recovery against the Contractor under applicable prompt pay statutes in addition to any other remedies provided for by the subcontract or by law.

Conditions

1. This clause does not create a contractual relationship between the Contracting Agency and any Subcontractor as stated in Section 1-08.1. Also, it is not intended to bestow upon any Subcontractor, the status of a third-party beneficiary to the Contract between the Contracting Agency and the Contractor.

2. This Section of the Contract does not apply to retainage withheld by the Contracting Agency from monies earned by the Contractor. The Contracting Agency shall continue to process the release of that retainage based upon the Completion Date of the project as defined in Section 1-08.5 Time for Completion and in accordance with the requirements and procedures set forth in RCW 60.28.

Payment

The Contractor shall be solely responsible for any additional costs involved in paying retainage to the Subcontractors prior to total project completion. Those costs shall be incidental to the respective Bid items.

Section 1-09, Measurement and Payment
January 5, 2015

1-09.6 Force Account

In the third paragraph of item number 3, the last sentence is revised to read:

In the event that prior quotations are not obtained and the vendor is not a firm independent from the Contractor or Subcontractor, then after-the-fact quotations may be obtained by the Engineer from the open market in the vicinity and the lowest such quotation may be used in place of submitted invoice.

Section 1-10, Temporary Traffic Control
August 4, 2014

1-10.1(1) Materials

The following material reference is deleted from this Section:

Barrier Drums 9-35.8

1-10.1(2) Description

The first paragraph is revised to read:

Provided to Builders Exchange of WA, Inc. For usage Conditions Agreement see www.bxwa.com - Always Verify Scale

The Contractor shall provide flaggers, and all other personnel required for labor for traffic control activities and not otherwise specified as being furnished by the Contracting Agency.

1-10.2(1) General

In the third paragraph, the first two sentences are revised to read:

The primary and alternate TCS shall be certified by one of the organizations listed in the Special Provisions. Possession of a current Washington State TCS card and flagging card by the primary and alternate TCS is mandatory.

1-10.2(1)B Traffic Control Supervisor

The first paragraph is revised to read:

A Traffic Control Supervisor (TCS) shall be present on the project whenever flagging or other traffic control labor is being utilized or less frequently, as authorized by the Engineer.

The last paragraph is revised to read:

The TCS may perform the Work described in Section 1-10.3(1)A Flaggers or in Section 1-10.3(1)B Other Traffic Control Labor and be compensated under those Bid items, provided that the duties of the TCS are accomplished.

1-10.2(2) Traffic Control Plans

The first paragraph is revised to read:

The Traffic Control Plan or Plans appearing in the Contract Documents show a method of handling vehicle, bicycle, and pedestrian traffic. All construction signs, flaggers, and other traffic control devices are shown on the Traffic Control Plan(s) except for emergency situations. If the Contractor proposes adding the use of flaggers to a Plan, this will constitute a modification requiring approval by the Engineer. The modified Plans shall show locations for all the required advance warning signs and a safe, protected location for the flagging station. If flagging is to be performed during hours of darkness, the Plan shall include appropriate illumination for the flagging station.

In the second paragraph, the second sentence is revised to read:

Any Contractor-proposed modification, supplement or replacement shall show the necessary construction signs, flaggers, and other traffic control devices required to support the Work.

1-10.2(3) Conformance to Established Standards

In the second paragraph, the second sentence is revised to read:

The National Cooperative Highway Research Project (NCHRP) Report 350 and the AASHTO Manual for Assessing Safety Hardware (MASH) have established requirements for crash testing.

Provided to Builders Exchange of WA, Inc. For usage Conditions Agreement see www.bxwa.com - Always Verify Scale

In the third paragraph, "NCHRP 350" is revised to read "NCHRP 350 or MASH".

In the fourth paragraph, "NCHRP 350" is revised to read "NCHRP 350 or MASH".

In the fifth paragraph, "NCHRP 350" is revised to read "NCHRP 350 or MASH".

1-10.3(1) Traffic Control Labor

The first paragraph is revised to read:

> The Contractor shall furnish all personnel for flagging, for the execution of all procedures related to temporary traffic control and for the setup, maintenance and removal of all temporary traffic control devices and construction signs necessary to control vehicular, bicycle, and pedestrian traffic during construction operations.

1-10.3(1)A Flaggers and Spotters

This Section's title is revised to read:

> **Flaggers**

The first paragraph is revised to read:

> Flaggers shall be posted where shown on approved Traffic Control Plans or where directed by the Engineer. All flaggers shall possess a current flagging card issued by the State of Washington, Oregon, Montana, or Idaho. The flagging card shall be immediately available and shown to the Contracting Agency upon request.

The last paragraph is deleted.

1-10.3(1)B Other Traffic Control Labor

This Section is revised to read:

> In addition to flagging duties, the Contractor shall provide personnel for all other traffic control procedures required by the construction operations and for the labor to install, maintain and remove any traffic control devices shown on Traffic Control Plans.

1-10.3(3)B Sequential Arrow Signs

This Section is supplemented with the following:

> A sequential arrow sign is required for all lane closure tapers on a multilane facility. A separate sequential arrow sign shall be used for each closed lane. The arrow sign shall not be used to laterally shift traffic. When used in the caution mode, the four corner mode shall be used.

1-10.3(3)C Portable Changeable Message Signs

This Section is revised to read:

> Where shown on an approved Traffic Control Plan or where ordered by the Engineer, the Contractor shall provide, operate, and maintain portable changeable message signs (PCMS). A PCMS shall be placed behind a barrier or guardrail whenever

Provided to Builders Exchange of WA, Inc. For usage Conditions Agreement see www.bxwa.com - Always Verify Scale

possible, but shall at a minimum provide 4 ft. of lateral clearance to edge of travelled lane and be delineated by channelization devices. The Contractor shall remove the PCMS from the clear zone when not in use unless protected by barrier or guardrail.

1-10.3(3)F Barrier Drums

This Section, including title, is deleted in its entirety and replaced with the following:

1-10.3(3)F Vacant

1-10.3(3)K Portable Temporary Traffic Control Signal

The fifth paragraph is revised to read:

The Project Engineer or designee will inspect the signal system at initial installation/operation and approve the signal timing. Final approval will be based on the results of the operational inspection.

1-10.4(2) Item Bids With Lump Sum for Incidentals

In the second paragraph, the first and second sentences are revised to read:

"Flaggers" will be measured by the hour. Hours will be measured for each flagging station, shown on an approved Traffic Control Plan, when that station is staffed in accordance with Section 1-10.3(1)A.

The first sentence of the last bulleted item in this Section is revised to read:

Installing and removing Barricades, Traffic Safety Drums, Cones, Tubular Markers and Warning Lights and Flashers to carry out approved Traffic Control Plan(s).

1-10.5(2) Item Bids With Lump Sum for Incidentals

This Section is deleted and replaced with the following:

"Traffic Control Supervisor", lump sum.

The lump sum Contract payment shall be full compensation for all costs incurred by the Contractor in performing the Work defined in Section 1-10.2(1)B.

"Pedestrian Traffic Control", lump sum.

The lump sum Contract payment shall be full compensation for all costs incurred by the Contractor in performing the Work for pedestrian traffic control defined in Section 1-10.

"Flaggers", per hour.

The unit Contract price, when applied to the number of units measured for this item in accordance with Section 1-10.4(2), shall be full compensation for all costs incurred by the Contractor in performing the Work defined in Section 1-10.3(1)A.

"Other Traffic Control Labor", per hour.

Provided to Builders Exchange of WA, Inc. For usage Conditions Agreement see www.bxwa.com - Always Verify Scale

The unit Contract price, when applied to the number of units measured for this item in accordance with Section 1-10.4(2), shall be full compensation for all labor costs incurred by the Contractor in performing the Work specified for this item in Section 1-10.4(2).

"Construction Signs Class A", per square foot.

The unit Contract price, when applied to the number of units measured for this item in accordance with Section 1-10.4(2), shall be full compensation for all costs incurred by the Contractor in performing the Work described in Section 1-10.3(3)A. In the event that "Do Not Pass" and "Pass With Care" signs must be left in place, a change order, as described in Section 1-04.4, will be required. When the Bid Proposal contains the item "Sign Covering", then covering those signs indicated in the Contract will be measured and paid according to Section 8-21.

"Sequential Arrow Sign", per hour.

The unit Contract price, when applied to the number of units measured for this item in accordance with Section 1-10.4(2), shall be full compensation for all costs incurred by the Contractor in performing the Work described in Section 1-10.3(3)B.

"Portable Changeable Message Sign", per hour.

The unit Contract price, when applied to the number of units measured for this item in accordance with Section 1-10.4(2), shall be full compensation for all costs incurred by the Contractor in performing the Work for procuring all portable changeable message signs required for the project and for transporting these signs to and from the project.

"Transportable Attenuator", per each.

The unit Contract price, when applied to the number of units measured for this item in accordance with Section 1-10.4(2), shall be full compensation for all costs incurred by the Contractor in performing the Work described in Section 1-10.3(3)J except for costs compensated separately under the items "Operation of Transportable Attenuator" and "Repair Transportable Attenuator".

"Operation of Transportable Attenuator", per hour.

The unit Contract price, when applied to the number of units measured for this item in accordance with Section 1-10.4(2), shall be full compensation for all costs incurred by the Contractor in performing the Work for operating transportable attenuators on the project.

"Repair Transportable Attenuator", by force account.

All costs of repairing or replacing transportable attenuators that are damaged by the motoring public while in use as shown on an approved Traffic Control Plan will be paid for by force account as specified in Section 1-09.6. To provide a common Proposal for all Bidders, the Contracting Agency has estimated the amount of force account for "Repair Transportable Attenuator" and has entered the amount in the

Provided to Builders Exchange of WA, Inc. For usage Conditions Agreement see www.bxwa.com - Always Verify Scale

Proposal to become a part of the total Bid by the Contractor. Transportable attenuators damaged due to the Contractor's operation or damaged in any manner when not in use shall be repaired or replaced by the Contractor at no expense to the Contracting Agency.

"Other Temporary Traffic Control", lump sum.

The lump sum Contract payment shall be full compensation for all costs incurred by the Contractor in performing the Work defined in Section 1-10, and which costs are not compensated by one of the above-listed items.

"Portable Temporary Traffic Control Signal", lump sum.

The lump sum Contract payment shall be full compensation for all costs incurred by the Contractor in performing the Work as described in Section 1-10.3(3)K, including all costs for traffic control during manual control, adjustment, malfunction, or failure of the portable traffic control signals and during replacement of failed or malfunctioning signals.

Section 2-01, Clearing, Grubbing, and Roadside Cleanup
August 3, 2015

2-01.2 Disposal of Usable Materials and Debris

This Section is revised to read:

The Contractor shall meet all requirements of State, county, and municipal regulations regarding health, safety, and public welfare in the disposal of all usable material and debris.

The Contractor shall dispose of debris by one or more of the disposal methods described below.

2-01.2(1) Disposal Method No. 1 – Open Burning

The first paragraph is supplemented with the following:

All burning operations shall be strictly in accordance with these authorizations.

The second paragraph is deleted.

2-01.2(3) Disposal Method No. 3 – Chipping

This Section is revised to read:

Wood chips may be disposed of on-site in accordance with the following:

1. Chips shall be no larger than 6 square inches and no thicker than ½ inch.

2. Chips shall be disposed outside of environmentally sensitive areas, and in areas that aren't in conflict with permanent Work.

Provided to Builders Exchange of WA, Inc. For usage Conditions Agreement see www.bxwa.com - Always Verify Scale

3. Chips shall not be incorporated into the embankment but may be spread on slopes where feasible at depths no greater than 2 inches.

4. Chips shall be tractor-walked into the ground.

2-01.3(1) Clearing

In the second paragraph, item number 3 (up until the colon) is revised to read:

3. Follow these requirements for all stumps that will be buried deeper than 5 feet from the top, side, or end surface of the embankment or any Structure and are in a location that will not be terraced as described in Section 2-03.3(14):

Section 2-02, Removal of Structures and Obstructions
January 5, 2015

2-02.3(2) Removal of Bridges, Box Culverts, and Other Drainage Structures

This Section is supplemented with the following new subsections:

2-02.3(2)A Bridge Removal

2-02.3(2)A1 Bridge Demolition Plan Submittal

The Contractor shall submit a Type 2E Working Drawing consisting of a Bridge Demolition Plan, showing the method of removing the existing bridge(s), or portions of bridges, as specified.

The Bridge Demolition Plan shall show all equipment, sequence of operations, and details required to complete the Work, including containment, collection, and disposal of all debris. The Plan shall include a crane foundation stability analysis and crane load calculations for the Work. The Plan shall detail the containment, collection, and disposal of all debris. The Plan shall show all stages of demolition.

When the bridge removal Work includes removal of a truss, and when the Contractor's removal method involves use of a crane or cranes to pick, lift, and remove the truss, the Contractor shall confirm the truss dead load weight prior to beginning the truss removal operation. The operation of confirming the truss dead load shall be performed at both ends of the truss, and shall ensure that the truss is broken free of its support bearings. The Contractor's method of confirming the truss dead load, whether by hydraulic jacks or other means, shall be included in the Contractor's Bridge Demolition Plan submittal.

When the bridge removal Work involves removing portions of existing concrete without replacement, the methods and tools used to achieve the smooth surface and profile specified in Section 2-02.3(2)A2 shall be included in the Contractor's Bridge Demolition Plan submittal.

2-02.3(2)A2 Removing Portions of Existing Concrete

Care shall be taken in removing concrete to prevent overbreakage or damage to portions of the existing Structure which are to remain. Before concrete removal begins, a saw cut shall be made into the surface of the concrete at the perimeter of the removal limits. The saw cut shall be 3/4-inch deep when the steel

Provided to Builders Exchange of WA, Inc. For usage Conditions Agreement see www.bxwa.com - Always Verify Scale

reinforcement is to remain, and may be deeper when the steel reinforcement is removed with the concrete.

Concrete shall be completely removed (exposing the deformed surface of the bar) from existing steel reinforcing bars which extend from the existing members and are specified to remain. Steel reinforcing bars that are not designated to remain shall be cut a minimum of 1-inch behind the final surface. The void left by removal of the steel reinforcing bar shall be filled with mortar conforming to Section 9-20.4(2). The mortar shall match the color of the existing concrete surface as nearly as practicable.

The Contractor shall roughen, clean, and saturate existing concrete surfaces, against which fresh concrete will be placed, in accordance with Section 6-02.3(12)B. When a portion of existing concrete is to be removed without replacement, concrete shall be removed to a clean line with a smooth surface of less than 1/16 inch profile.

2-02.3(2)A3 Use of Explosives for Bridge Demolition

Explosives shall not be used for bridge demolition, except as specifically allowed by the Special Provisions.

2-02.5 Payment

This Section is supplemented with the following new Bid items:

"Removing Existing Bridge___", lump sum.

"Removing Existing Structure___", lump sum.

"Removing Portion of Existing Bridge___", lump sum.

"Removing Portion of Existing Structure___", lump sum.

Section 2-03, Roadway Excavation and Embankment
August 3, 2015

2-03.1 Description

The first paragraph is supplemented with the following:

The Work includes the removal of pavement, sidewalks, curbs and gutters as described in Section 2-02 when these items lie within an excavation area.

2-03.3 Construction Requirements

This Section is supplemented with the following new sub-section:

2-03.3(19) Removal of Pavement, Sidewalks, Curbs, and Gutters

The requirements of Section 2-02.3(3) shall also apply when pavements, sidewalks, curbs, and gutters lie within an excavation.

2-03.3(1) Widening of Cuts

This Section is revised to read:

Provided to Builders Exchange of WA, Inc. For usage Conditions Agreement see www.bxwa.com - Always Verify Scale

If routine cuts do not supply enough material to form the embankment, the Contractor shall obtain more material from areas inside or outside the Right of Way and/or from widening one or both sides of existing cuts as determined by the Engineer. The Contractor shall dress the sides of the cuts to any slopes the Engineer may require. If the Contractor has dressed a cut before the Engineer determines to widen it, the Contracting Agency will pay for the resloping as provided in Section 1-04.4. In addition, material obtained from areas beyond the cuts shown in the Plans that result in additional haul will be paid by the Contracting Agency as provided in Section 1-04.4.

2-03.3(14) Embankment Construction

The third paragraph is revised to read:

Hillside Terraces – The Contractor shall terrace the original ground or embankment when the slope of the surface is 2H:1V or steeper unless otherwise directed by the Engineer. The face of each terrace shall be a minimum of 1 foot and a maximum of 5 feet in height and shall be vertical or near vertical as required to remain stable during material placement and compaction. The bench of the terrace shall slope outward to drain and shall not be inclined steeper than 0.05 foot per foot. Terraces damaged during work shall be reestablished. The Engineer may order the Contractor to place gravel backfill, pipe drains or both to drain any seepage.

2-03.3(14)C Compacting Earth Embankments

The last nine paragraphs are deleted and replaced with the following three new paragraphs:

Moisture Content – The Contractor shall adjust moisture content during compaction to produce a firm, stable and unyielding embankment. The embankment shall be free from pumping and rutting due to excessive moisture and is the Contractor's responsibility to manage and adjust as necessary.

The Contracting Agency will consider all costs for drying embankment material to be incidental to other Work, including excessive moisture due to inclement weather. If, however, the Contract includes an aeration item, the Contracting Agency will pay for such Work as specified in Sections 2-03.4 and 2-03.5.

The Contractor shall repair, at no expense to the Contracting Agency, any partial or complete embankment that loses stability because of continued hauling across it. Evidence of lost stability includes pumping, rutting or lateral displacement of embankment. The Contractor shall also alter hauling equipment or procedures to prevent further damage.

2-03.3(14)L Embankment Widening for Guardrail

The first sentence is revised to read:

Embankments widened for the installation of beam guardrail shall be terraced in accordance with the requirements for hillside terraces in Section 2-03.3(14).

The second sentence is deleted.

Provided to Builders Exchange of WA, Inc. For usage Conditions Agreement see www.bxwa.com - Always Verify Scale

Section 2-09, Structure Excavation
August 3, 2015

2-09.3(2) Classification of Structure Excavation

The first sentence of item number 1 is revised to read:

Class A – Structure excavation required for bridge and retaining wall footings, precast reinforced concrete three sided Structure footings, geosynthetic retaining walls, structural earth walls, sign Structure footings, pile or drilled shaft caps, seals, wingwall footings, precast reinforced concrete box culverts, precast reinforced concrete split box culverts, detention vaults, and noise barrier wall footings shall be classified as Structure Excavation Class A.

2-09.4 Measurement

The second paragraph is revised to read:

Horizontal Limits – The Contracting Agency will use the sides of the trench or pit as horizontal limits in measuring excavation. No payment for Structure excavation will be made for material removed (1) more than 1 foot outside the perimeter of any pile cap, footing, or seal; (2) more than 3 feet beyond the Roadway side of a wing wall; (3) more than 1 foot beyond the other sides and end of a wing wall; (4) more than 1 foot outside the perimeter of the soil reinforcement area for geosynthetic and structural earth walls; and (5) more than 4-feet beyond the inside opening of precast reinforced concrete box culverts and precast reinforced concrete split box culverts. For precast reinforced concrete three sided Structures, no payment for Structure excavation will be made for material removed more than 1 foot outside the perimeter of the footing or more than 4 feet beyond the inside opening, whichever is greater.

The seventh paragraph is revised to read:

For pipelines the lower limit in measuring Structure excavation will be the foundation level as shown in the Plans or as directed by the Engineer.

Section 2-12, Construction Geosynthetic
January 5, 2015

2-12.3(4) Permanent Erosion Control and Ditch Lining

In the fourth paragraph, "Section 9-13.2" is revised to read "Section 9-13.1(4)".

Section 3-01, Production From Quarry and Pit Sites
August 3, 2015

3-01.2(2) Preparation of Site

This Section is supplemented with the following three new paragraphs:

The Contractor shall provide sufficient space as required for the setup and operation of the Contracting Agency's field testing facilities at the site of crushing or hot mix asphalt production.

Provided to Builders Exchange of WA, Inc. For usage Conditions Agreement see www.bxwa.com - Always Verify Scale

As directed by the Engineer, the Contractor shall provide one of the following to ensure 24-hour per day operation of the Contracting Agency's laboratory trailer(s) that may be set up at the site during production:

1. A power source and a power cord of sufficient length to reach the Contracting Agency's laboratory trailer(s) which may be set up at the site. The cord shall be capable of carrying at least 120/240 volts, 60 cycles at a sustained load of up to 200 amps. The cord and trailer(s) electrical hookup shall meet the NEC code. Power shall be provided and connected when requested by the Engineer. The laboratory trailer(s) hookup shall be protected by a 2 pole 50 amp 240 VAC circuit breaker.

2. A daily supply of fuel adequate for operation of the Contracting Agency's generator(s).

Potable water shall be provided to the Contracting Agency's laboratory trailer(s) for use during plant operations when requested by the Engineer.

Section 3-04, Acceptance of Aggregate
April 6, 2015

3-04.5 Payment

In Table 1, the "Maximum Sublot Size (Tons)" value for the item HMA Aggregate is revised to read "2000".

In Table 2, the row containing the item "HMA Aggregate" is revised to read:

9-03.8(2)	HMA Aggregate						15	15	Uncompacted Void Content 15

Section 5-01, Cement Concrete Pavement Rehabilitation
August 4, 2014

5-01.2 Materials

The referenced Section for the following item is revised to read:

Dowel Bars 9-07.5

5-01.3(4) Replace Portland Cement Concrete Panel

In the third paragraph, the last sentence is deleted.

The seventeenth paragraph (beginning with "The Contractor shall place a bond-breaking material…") is deleted.

Section 5-02, Bituminous Surface Treatment
August 4, 2014

5-02.3(11) Temporary Raised Pavement Markings

This Section's title is revised to read:

Provided to Builders Exchange of WA, Inc. For usage Conditions Agreement see www.bxwa.com - Always Verify Scale

Temporary Pavement Markings

The word "raised" is deleted from this Section.

Section 5-04, Hot Mix Asphalt
August 3, 2015

5-04.2 Materials

The third through eighth paragraphs are deleted and replaced with the following:

The Contractor may choose to utilize recycled asphalt pavement (RAP) or reclaimed asphalt shingles (RAS) in the production of HMA. The RAP may be from pavements removed under the Contract, if any, or pavement material from an existing stockpile. The RAS may be from reclaimed shingles.

The Contractor may use up to 20 percent RAP by total weight of HMA with no additional sampling or testing of the RAP. If greater than 20 percent RAP by total weight of HMA or any amount of RAS is utilized in the production of HMA, the Contractor shall sample and test the RAP and RAS during stockpile construction in accordance with WSDOT FOP for AASHTO T 308 for determination of asphalt binder content and WSDOT FOP for WAQTC/AASHTO T 27/T 11 for gradation of the aggregates. The RAP shall be sampled and tested at a frequency of one sample for every 1,000 tons produced and not less than ten samples per project. The RAS shall be sampled and tested at a frequency of one sample for every 100 tons produced and not less than ten samples per project. The asphalt content and gradation test data shall be reported to the Contracting Agency when submitting the mix design for approval on the QPL. If utilized, the amount of RAS shall not exceed 5-percent of the total weight of the HMA. The Contractor shall include the RAP and RAS as part of the mix design as defined in these Specifications.

The grade of asphalt binder shall be as required by the Contract. Blending of asphalt binder from different sources is not permitted.

The Contractor may only use warm mix asphalt (WMA) processes in the production of HMA with 20 percent or less RAP by total weight of HMA and no RAS. The Contractor shall submit to the Engineer for approval the process that is proposed and how it will be used in the manufacture of HMA.

When the Contracting Agency provides aggregates or provides a source for the production of aggregates, the Contract Provisions will establish the approximate percentage of asphalt binder required in the mixture for each class of HMA.

Production of aggregates shall comply with the requirements of Section 3-01.

Preparation of stockpile site, the stockpiling of aggregates, and the removal of aggregates from stockpiles shall comply with the requirements of Section 3-02.

5-04.3(1) Hot Mix Asphalt Mixing Plant

In the first paragraph, the last sentence of item number 4 is revised to read:

Provided to Builders Exchange of WA, Inc. For usage Conditions Agreement see www.bxwa.com - Always Verify Scale

The Contractor shall provide for the setup and operation of the field testing facilities of the Contracting Agency as provided for in Section 3-01.2(2).

The first paragraph is supplemented with the following:

6. **Equipment for Processing RAP and RAS.** When producing HMA for mix designs with greater than 20 percent RAP by total weight of HMA or any amount of RAS the HMA plant shall be equipped with screens or a lump breaker to eliminate oversize RAP/RAS particles from entering the pug mill or drum mixer.

5-04.3(3)A Material Transfer Device/Vehicle

The first paragraph is supplemented with the following new sentence:

At the Contractor's request the Engineer may approve paving without an MTD/V; the Engineer will determine if an equitable adjustment in cost or time is due.

In the last sentence of the second paragraph, "Project Engineer" is revised to read "Engineer".

5-04.3(5)A Preparation of Existing Surfaces

The first sentence of the last paragraph is revised to read:

Unless otherwise approved by the Engineer, the tack coat shall be CSS-1 or CSS-1h emulsified asphalt.

5-04.3(7) Preparation of Aggregates

This Section is revised to read:

The aggregates, RAP and RAS shall be stockpiled according to the requirements of Section 3-02. Sufficient storage space shall be provided for each size of aggregate, RAP and RAS. The Contractor may uniformly blend fine aggregate or RAP with the RAS as a method of preventing the agglomeration of RAS particles. The aggregates, RAP and RAS shall be removed from stockpile(s) in a manner to ensure minimal segregation when being moved to the HMA plant for processing into the final mixture. Different aggregate sizes shall be kept separated until they have been delivered to the HMA plant.

5-04.3(7)A1 General

This Section is revised to read:

An approved mix design, listed on the Qualified Products List (QPL), is required for all HMA paving. The Contractor shall develop a mix design prior to the initial production of HMA and no more than 3 months prior to submitting for QPL evaluation. The mix design shall be developed in accordance with WSDOT Standard Operating Procedure 732 and meet the requirements of Sections 9-03.8(2) and 9-03.8(6).

Mix designs shall be submitted by the Contractor to the WSDOT State Materials Laboratory on WSDOT Form 350-042EF. If the mix design is approved it will be listed on the QPL for up to 24 consecutive months. Mix designs not listed on the QPL or

Provided to Builders Exchange of WA, Inc. For usage Conditions Agreement see www.bxwa.com - Always Verify Scale

past the 24 month approved period shall not be used. After a mix design has been on the QPL for 12 months the listing will be extended provided the Contractor submits a certification letter to the Qualified Products Engineer verifying that the aggregate and asphalt binder have not changed. The Contractor may submit the certification one month prior to expiration of the mix design approval. Within 7 calendar days of receipt of the Contractor's certification the QPL will be updated. The maximum duration for approval of a mix design and listing on the QPL will be 24 months from the date of initial approval or as approved by the Engineer.

Changes to the job mix formula of a mix design may require the development of a new mix design and resubmittal for QPL approval.

Changes to aggregate that may require a new mix design include the source of material or a change in the percentage of material from a stockpile greater than 5 percent. Changes to the percentage of material from a stockpile will be calculated exclusive of the RAP content for mix designs with 20 percent RAP or less by total weight of HMA.

Changes to asphalt binder that may require a new mix design include the source of the crude petroleum supplied to the refinery, the refining process, and additives or modifiers in the asphalt binder.

The Contractor shall include the brand and type of anti-stripping additive in the mix design submittal and provide certification from the asphalt binder manufacture that the anti-stripping additive is compatible with the crude source and formulation of asphalt binder proposed in the mix design. All changes to anti-strip require the submittal of a new mix design for approval.

Mix designs with 20 percent RAP or less by total weight of HMA and no RAS will be completed without the inclusion of the RAP. For HMA mix designs with greater than 20 percent RAP by total weight of HMA or any amount of RAS the Contractor shall develop a mix design including RAP, RAS, recycling agent and new asphalt binder. Asphalt binder contributed from RAS shall be determined in accordance with AASHTO PP 78. The total quantity of asphalt binder from the RAP and RAS shall not exceed 40 percent of the total asphalt binder content of the HMA.

Once the RAP and RAS stockpiles have been constructed the Contractor shall extract, recover and test the asphalt residue from the RAP and RAS stockpiles to determine the percent of recycling agent and/or grade of new asphalt binder needed to meet the grade of asphalt binder required by the Contract. The asphalt extraction testing shall be performed in accordance with AASHTO T 164 or ASTM D 2172 using reagent grade trichloroethylene. The asphalt recovery shall be performed in accordance with AASHTO R 59 orASTM D 1856. The recovered asphalt residue shall be tested in accordance with AASHTO R 29 to determine the asphalt binder grade in accordance with Section 9-02.1(4). Once the recovered asphalt binder grade is determined the percent of recycling agent and/or grade of new asphalt binder shall be determined in accordance with ASTM D 4887. The final blend of recycling agent, recovered and new asphalt shall be tested in accordance with AASHTO R 29. The final blended asphalt binder shall be the grade as required by the Contract and comply with the requirements of in accordance with Section 9-02.1(4).

Provided to Builders Exchange of WA, Inc. For usage Conditions Agreement see www.bxwa.com - Always Verify Scale

5-04.3(7)A2 Statistical or Nonstatistical Evaluation

This Section is revised to read:

The Contractor shall submit WSDOT Form 350-041EF to the Engineer for approval to use a mix design from the QPL. The Contractor may include changes to the job mix formula that have been approved on other Contracts. The request to use a mix design from the QPL may be rejected if production of the HMA from another Contract is not in compliance with Section 5-04.3(11)D.

The Contractor shall submit representative samples of the materials that are to be used in the HMA production to the State Materials Laboratory in Tumwater. For HMA mix designs with 20 percent RAP or less by total weight of HMA and no RAS, the Contractor shall submit representative samples of the mineral materials that are to be used in the HMA production; the submittal of RAP samples is not required for these mix designs. For HMA mix designs with greater than 20 percent RAP by total weight of HMA or any amount of RAS the Contractor shall submit representative samples of the mineral materials, RAP, RAS and 100 grams of recovered asphalt residue from the RAP and RAS that are to be used in the HMA production. The Contracting Agency will use these samples to evaluate the mix design for approval on the QPL in accordance with WSDOT Standard Practice QC-8.

5-04.3(7)A3 Commercial Evaluation

This Section is revised to read:

Approval of a Commercial Evaluation mix design for listing on the QPL will be based on a review of the Contractor's submittal of WSDOT Form 350-042EF for conformance to the requirements of Section 9-03.8(2). Testing of the HMA by the Contracting Agency for mix design approval is not required. Mix designs for HMA with greater than 20 percent RAP by total weight of HMA or any amount of RAS may be evaluated in accordance with Section 5-04.3(7)A2.

For the Bid item "Commercial HMA", the Contractor shall select a class of HMA and design level of Equivalent Single Axle Loads (ESAL's) appropriate for the required use.

5-04.3(8) Mixing

The first sentence of the second paragraph is revised to read:

When discharged, the temperature of the HMA shall not exceed the optimum mixing temperature by more than 25°F as shown on the reference mix design report or as approved by the Engineer.

The last paragraph is supplemented with the following new sentence:

After the required amount of mineral materials, RAP, RAS, new asphalt binder and asphalt rejuvenator have been introduced into the mixer the HMA shall be mixed until complete and uniform coating of the particles and thorough distribution of the asphalt binder throughout the mineral materials, RAP and RAS is ensured.

Provided to Builders Exchange of WA, Inc. For usage Conditions Agreement see www.bxwa.com - Always Verify Scale

5-04.3(8)A4 Definition of Sampling and Sublot

The second sentence of the second paragraph is revised to read:

The sublots shall be approximately uniform in size with a maximum sublot size based on original Plan quantity tons as specified in the following table.

This Section is supplemented with the following new table:

HMA Original Plan Quantity (tons)	Sublot Size (tons)
<20,000	1,000
20,000 to 30,000	1,500
>30,000	2,000

5-04.3(8)A7 Test Section – HMA Mixtures

This Section is revised to read:

For each class of HMA accepted by statistical evaluation with 20 percent RAP or less by total weight of HMA and no RAS, the Contractor may request a single test section to determine whether the mixture meets the requirements of Sections 9-03.8(2) and 9-03.8(6). For each HMA mix design accepted by statistical evaluation with greater than 20 percent RAP by weight of HMA or any amount of RAS, the Contractor shall construct a test section to determine whether the mixture meets the requirements of Sections 9-03.8(2) and 9-03.8(6). Test sections shall be constructed at the beginning of paving and will be at least 600 tons and a maximum of 1,000 tons or as approved by the Engineer. For a test section to be acceptable the pay factor (PF) for gradation, asphalt binder and Va shall be 0.95 or greater for each constituent and the remaining test requirements in Section 9-03.8(2) (fracture, uncompacted void, sand equivalent, dust/asphalt ratio, Hamburg and IDT) shall conform to the requirements of that section. No further wearing or leveling HMA will be paved on any of the four calendar days following construction of the test section. The mixture in the test section will be evaluated as a lot with a minimum of three sublots required. If more than one test section is required, each test section shall be a separate lot.

5-04.3(10)A General

In the first paragraph, “checking” and “cracking” are deleted.

In the third paragraph, the following new sentence is inserted after the second sentence:

Coverage with a steel wheel roller may precede pneumatic tired rolling.

In the third paragraph, the following new sentence is inserted before the last sentence:

Regardless of mix temperature, a roller shall not be operated in a mode that results in checking or cracking of the mat.

5-04.3(10)B1 General

In this Section, “Project Engineer” is revised to read “Engineer”.

The first paragraph is revised to read:

Provided to Builders Exchange of WA, Inc. For usage Conditions Agreement see www.bxwa.com - Always Verify Scale

HMA mixture accepted by statistical or nonstatistical evaluation that is used in traffic lanes, including lanes for ramps, truck climbing, weaving, and speed change, and having a specified compacted course thickness greater than 0.10-foot, shall be compacted to a specified level of relative density. The specified level of relative density shall be a Composite Pay Factor (CPF) of not less than 0.75 when evaluated in accordance with Section 1-06.2, using a minimum of 91 percent of the maximum density. The specified level of density attained will be determined by the statistical evaluation of the density of the pavement. The density of the pavement shall be determined in accordance with WSDOT FOP for WAQTC TM 8 when using the nuclear density gauge and WSDOT SOP 736 when using cores to determine density.

The following four new paragraphs are inserted after the first paragraph:

Tests for the determination of the pavement density will be taken in accordance the required procedures for measurement by a nuclear density gauge or Roadway cores after completion of the finish rolling.

If the Contracting Agency uses a nuclear density gauge to determine density the test procedures FOP for WAQTC TM 8 and WSDOT SOP T 729 will be used on the day the mix is placed.

Roadway cores for density may be obtained by either the Contracting Agency or the Contractor in accordance with WSDOT SOP 734. The core diameter shall be 4-inches unless otherwise approved by the Engineer. Roadway cores will be tested by the Contracting Agency in accordance with WSDOT FOP for AASHTO T 166.

If the Contract includes the Bid item "Roadway Core" the cores shall be obtained by the Contractor in the presence of the Engineer on the same day the mix is placed and at locations designated by the Engineer. If the Contract does not include the Bid item "Roadway Core" the Contracting Agency will obtain the cores.

In the sixth paragraph (after the preceding Amendments are applied), the second sentence is revised to read:

Sublots will be uniform in size with a maximum sublot size based on original Plan quantity tons of HMA as specified in the table below.

The following new table is inserted before the second to last paragraph:

HMA Original Plan Quantity (tons)	Sublot Size (tons)
<20,000	100
20,000 to 30,000	150
>30,000	200

5-04.3(10)B4 Test Results

The first paragraph is revised to read:

The results of all compaction acceptance testing and the CPF of the lot after three sublots have been tested will be available to the Contractor through WSDOT's website. Determination of the relative density of the HMA with a nuclear density gauge

Provided to Builders Exchange of WA, Inc. For usage Conditions Agreement see www.bxwa.com - Always Verify Scale

requires a correlation factor and may require resolution after the correlation factor is known. When a core is taken for gauge correlation at the location of a sublot, the relative density of the core will be used for the sublot test result and is exempt from retesting. Acceptance of HMA compaction will be based on the statistical evaluation and CPF so determined.

In the second paragraph, the first sentence is revised to read:

For a sublot that has been tested with a nuclear density gauge that did not meet the minimum of 91 percent of the reference maximum density in a compaction lot with a CPF below 1.00 and thus subject to a price reduction or rejection, the Contractor may request that a core be used for determination of the relative density of the sublot.

In the second sentence of the second paragraph, "moisture-density" is revised to read "density".

In the second paragraph, the fourth sentence is deleted.

5-04.3(20) Anti-Stripping Additive

This Section is revised to read:

Anti-stripping additive shall be added to the liquid asphalt by the asphalt supplier prior to shipment to the asphalt mixing plant. Anti-stripping additive shall be added in the amount designated on the QPL for the mix design. Anti-strip is not required for temporary Work that will be removed prior to Completion.

5-04.4 Measurement

The following new paragraph is inserted after the first paragraph:

Roadway cores will be measured per each for the number of cores taken.

The second to last paragraph is deleted.

5-04.5 Payment

The Bid item "Removing Temporary Pavement Marking", per linear foot and paragraph following Bid item are deleted.

The following new Bid item is inserted before the second to last paragraph:

"Roadway Core", per each.

The Contractor's costs for all other Work associated with the coring (e.g., traffic control) shall be incidental and included within the unit Bid price per each and no additional payments will be made.

Section 5-05, Cement Concrete Pavement
April 6, 2015

5-05.3(1) Concrete Mix Design for Paving

In item number 1, the first sentence of the third paragraph is revised to read:

Provided to Builders Exchange of WA, Inc. For usage Conditions Agreement see www.bxwa.com - Always Verify Scale

Ground granulated blast furnace slag, if used, shall not exceed 30 percent by weight of the total cementitious material and shall conform to Section 9-23.10.

The second and third rows of the table in item number 3 are revised to read:

Coarse Aggregate	+ 30 Pounds	- 30 Pounds
Fine Aggregate	+ 30 Pounds	- 30 Pounds

5-05.4 Measurement

The fourth paragraph is supplemented with the following new sentence:

Tie bars with drill holes in cement concrete pavement placed under the Contract will not be measured.

5-05.5 Payment

The paragraph following the Bid item "Tie Bar with Drill Hole", per each is supplemented with the following new sentence:

All costs for tie bars with drill holes in cement concrete pavement placed under the Contract shall be included in the unit Contract price per cubic yard for "Cement Conc. Pavement".

Section 6-01, General Requirements for Structures
January 5, 2015

6-01.6 Load Restrictions on Bridges Under Construction

The first sentence of the second paragraph is revised to read:

If necessary and safe to do so, and if the Contractor requests it through a Type 2E Working Drawing, the Engineer may allow traffic on a bridge prior to completion.

In the second paragraph, item number 3 (up until the colon) is revised to read:

3. Provide stress calculations under the design criteria specified in the AASHTO LRFD Bridge Design Specifications, current edition, including at a minimum the following:

6-01.9 Working Drawings

This Section is revised to read:

All Working Drawings required for bridges and other Structures shall conform to Section 1-05.3.

6-01.10 Utilities Supported by or Attached to Bridges

In the second paragraph, "bridge Structures" is revised to read "bridges".

6-01.14 Premolded Joint Filler

In the second paragraph, the first sentence is revised to read:

Provided to Builders Exchange of WA, Inc. For usage Conditions Agreement see www.bxwa.com - Always Verify Scale

The Contractor may substitute for the nails any adhesive acceptable to the Engineer.

Section 6-02, Concrete Structures
August 3, 2015

6-02.2 Materials
The reference to "Prestressed Concrete Girders" (Section 9-19) is deleted.

6-02.3(1) Classification of Structural Concrete
In paragraph two, item number 1 is revised to read:

> Mix design and proportioning specified in Sections 6-02.3(2), 6-02.3(2)A and 6-02.3(2)A1.

Item number 3 is renumbered to 4.

After the preceding Amendments are applied, the following new numbered item is inserted after item number 2:

> 3. Temperature and time for placement requirements specified in Section 6-02.3(4)D.

6-02.3(2) Proportioning Materials
In the third paragraph, the first sentence is revised to read:

> The use of fly ash is required for Class 4000P concrete, except that ground granulated blast furnace slag may be substituted for fly ash at a 1:1 ratio.

In the table titled "Cementitious Requirement for Concrete", the row beginning with "4000D" is deleted.

The fourth paragraph is revised to read:

> When both ground granulated blast furnace slag and fly ash are included in the concrete mix, the total weight of both these materials is limited to 40 percent by weight of the total cementitious material for concrete class 4000A, and 50 percent by weight of the total cementitious material for all other classes of concrete.

6-02.3(2)A Contractor Mix Design
The first paragraph is revised to read:

> The Contractor shall provide a mix design in writing to the Engineer for all classes of concrete specified in the Plans except for lean concrete and commercial concrete. No concrete shall be placed until the Engineer has reviewed the mix design. The required average 28-day compressive strength shall be selected in accordance with ACI 301, Chapter 4, Section 4.2.3.3. ACI 211.1 shall be used to determine proportions. All proposed concrete mixes except Class 4000D shall meet the requirements in Cementitious Requirement for Concrete in Section 6-02.3(2).

In the fourth paragraph, the fourth sentence is deleted.

Provided to Builders Exchange of WA, Inc. For usage Conditions Agreement see www.bxwa.com - Always Verify Scale

The sixth paragraph is revised to read:

A retarding admixture is required in concrete Class 4000P.

The seventh paragraph is deleted.

The eighth paragraph is revised to read:

Air content for concrete Class 4000D shall conform to Section 6-02.3(2)A1. For all other concrete, air content shall be a minimum of 4.5 percent and a maximum of 7.5 percent for all concrete placed above the finished ground line.

The following new sub-sections are added:

6-02.3(2)A1 Contractor Mix Design for Concrete Class 4000D

All Class 4000D concrete shall conform to the following requirements:

1. Aggregate shall use combined gradation in accordance with Section 9-03.1(5) with a nominal maximum aggregate size of 1-1/2 inches.

2. Permeability shall be less than 2,000 coulombs at 56 days in accordance with AASHTO T 277.

3. Freeze-thaw durability shall be provided by one of the following methods:

   a. The concrete shall maintain an air content between 4.5 and 7.5 percent.

   b. The concrete shall maintain a minimum air content that achieves a durability factor of 90 percent, minimum, after 300 cycles in accordance with AASHTO T 161, Procedure A. This air content shall not be less than 3.0 percent. Test samples shall be obtained from concrete batches of a minimum of 3.0 cubic yards.

4. Scaling shall have a visual rating less than or equal to 2 after 50 cycles in accordance with ASTM C 672.

5. Shrinkage at 28 days shall be less than 0.032 percent in accordance with AASHTO T 160.

6. Modulus of elasticity shall be measured in accordance with ASTM C 469.

7. Density shall be measured in accordance with ASTM C 138.

The Contractor shall submit the mix design in accordance with Section 6-02.3(2)A. The submittal shall include test reports for all tests listed above that follow the reporting requirements of the AASHTO/ASTM procedures. Samples for testing may be obtained from either laboratory or concrete plant batches. If concrete plant batches are used, the minimum batch size shall be 3.0 cubic yards. The Contractor shall submit the mix design to the Engineer at least 30 calendar days prior to the placement of concrete in the bridge deck.

Provided to Builders Exchange of WA, Inc. For usage Conditions Agreement see www.bxwa.com - Always Verify Scale

6-02.3(2)A2 Contractor Mix Design for Self-Consolidating Concrete

Self-consolidating concrete (SCC) is concrete that is able to flow under its own weight and completely fill the formwork without the need for vibration while maintaining homogeneity, even in the presence of dense reinforcement. SCC shall be capable of being pumped, and of flowing through the steel reinforcing bar cage without segregation or buildup of differential head inside or outside of the steel reinforcing bar cage.

Type III cement may be used in SCC.

SCC may be used for the following concrete Structure elements:

1. All cast-in-place concrete elements except bridge decks, bridge approach slabs, and any cast-in-place concrete element excluded by the Special Provisions.

2. Prestressed concrete girders in accordance with Section 6-02.3(25).

3. All precast concrete elements identified in Section 6-02.3(27)A.

The mix design submittal shall include items specified in Section 6-02.3(2)A and results of the following tests conducted on concrete that has slump flow within the slump flow range defined below:

1. Slump Flow.

   a. The mix design shall specify the target slump flow in inches, in accordance with WSDOT FOP for ASTM C 1611. The slump flow range is defined as the target slump flow plus or minus 2-inches.

   b. The visual stability index (VSI) shall be less than or equal to 1, in accordance with ASTM C 1611, Appendix X1, using Filling Procedure B.

   c. The T_{50} flow rate results shall be less than 6-seconds in accordance with ASTM C 1611, Appendix X1, using Filling Procedure B.

2. Column Segregation.

   a. The maximum static segregation shall be 10-percent in accordance with ASTM C 1610.

   b. The Maximum Hardened Visual Stability Index (HVSI) shall be 1 in accordance with AASHTO PP 58.

3. J ring test results for passing ability shall be less than or equal to 1.5-inches in accordance with the WSDOT FOP for ASTM C 1621.

Provided to Builders Exchange of WA, Inc. For usage Conditions Agreement see www.bxwa.com - Always Verify Scale

4. Rapid assessment of static segregation resistance of self-consolidating concrete using penetration test in accordance with ASTM C 1712 shall be less than or equal to 15 mm.

5. Air content shall be tested in accordance with WSDOT Test Method T 818, and shall conform to Section 6-02.3(2)A.

6. Concrete unit weight results in pounds per cubic foot shall be recorded in accordance with AASHTO T 121, except that the concrete shall not be consolidated in the test mold.

7. The temperature of all concrete laboratory test samples shall be tested in accordance with AASHTO T 309 and shall conform to the placement limits specified in Section 6-02.3(4)D.

8. The modulus of elasticity in pounds per square inch at 28 days shall be recorded in accordance with ASTM C 469.

In lieu of a Contractor-Provided mix design for SCC for Section 6-02.3(27)A Structure elements 3, 7 and 8, a representative full-size example Structure element shall be cast for inspection by the Contracting Agency in accordance with Section 6-02.3(27)B as a component of the precast fabricating facility's annual plant approval process.

6-02.3(4)C Consistency

This Section is supplemented with the following new paragraph:

For self-consolidating concrete (SCC), the slump requirements specified above do not apply, and are instead replaced by the target slump flow and slump flow range specified as part of the SCC mix design.

6-02.3(4)D Temperature and Time For Placement

The first two sentences are revised to read:

Concrete temperatures shall remain between 55ºF and 90ºF while it is being placed, except that Class 4000D concrete temperatures shall remain between 55°F and 75°F during placement. Precast concrete that is heat cured in accordance with Section 6-02.3(25)D shall remain between 50ºF and 90ºF while being placed.

6-02.3(5)A General

The first paragraph is revised to read:

Concrete for the following applications will be accepted based on a Certificate of Compliance to be provided by the supplier as described in Section 6-02.3(5)B:

1. Lean concrete.

2. Commercial concrete.

3. Class 4000P concrete for Roadside Steel Sign Support Foundations.

Provided to Builders Exchange of WA, Inc. For usage Conditions Agreement see www.bxwa.com - Always Verify Scale

4. Class 4000P concrete for Type II, III, and CCTV Signal Standard Foundations that are 12'-0" or less in depth.

5. Class 4000P concrete for Type IV and V Strain Pole Foundations that are 12'-0" or less in depth.

6. Class 4000P concrete for Steel Light Standard Foundations Types A & B.

The following new sentence is inserted at the beginning of the second paragraph:

Slip-form barrier concrete will be accepted based on conformance to the requirements for temperature, air content and compressive strength at 28 days for sublots as tested and determined by the Contracting Agency.

6-02.3(5)B Certification of Compliance

In the list within the first paragraph, "Fly ash (if used) brand and Type" is revised to read "Fly ash (if used) brand and Class".

The first sentence of the second to last paragraph is deleted.

6-02.3(5)D Test Methods

The list in this Section is supplemented with the following two new test methods:

ASTM C 1611	Standard Test Method for Slump Flow of Self-Consolidating Concrete
ASTM C 1621	Standard Test Method for Passing Ability of Self-Consolidating Concrete by J-Ring

6-02.3(5)G Sampling and Testing Frequency for Temperature, Consistency, and Air Content

This Section's title is revised to read:

6-02.3(5)G Sampling and Testing for Temperature, Consistency, and Air Content

The first paragraph is revised to read:

Concrete properties shall be determined from concrete as delivered to the project and as accepted by the Contractor for placement. The Contracting Agency will perform acceptance testing on all concrete for temperature, and air content, if applicable. Concrete that is not self-consolidating concrete will be tested for slump. The following additional acceptance tests will be performed on self-consolidating concrete:

1. Slump flow within the target slump flow range.

2. J ring passing ability less than or equal to 1.5 inches.

3. VSI less than or equal to 1.

Provided to Builders Exchange of WA, Inc. For usage Conditions Agreement see www.bxwa.com - Always Verify Scale

In the fifth sentence of the second paragraph, "five truck loads" is revised to read "ten truck loads".

The second paragraph is supplemented with the following:

> If the remaining quantity to be placed is less than ten truck loads; then a sample shall be randomly taken from one of the remaining truck loads.

In the last sentence of the third paragraph, "five truck loads" is revised to read "ten truck loads".

6-02.3(5)H Sampling and Testing for Compressive Strength and Initial Curing

The second paragraph is revised to read:

> The Contractor shall provide and maintain a sufficient number of cure boxes in accordance with WSDOT FOP for AASHTO T 23 for curing concrete cylinders. The cure boxes shall be readily accessible and no more than 500 feet from the point of acceptance testing, unless otherwise approved by the Engineer. The Contractor shall also provide, maintain and operate all necessary power sources and connections needed to operate the cure boxes. The cure boxes shall be in-place and functioning at the specified temperature for curing cylinders prior to concrete placement. Concrete cylinders shall be cured in the cure boxes in accordance with WSDOT FOP for AASHTO T 23. The cure boxes shall have working locks and the Contractor shall provide the Engineer with one key to each of the locks. Once concrete cylinders are placed in the cure box, the cure box shall not be disturbed until the cylinders have been removed. The Contractor shall retain the cure box Temperature Measuring Device log and provide it to the Engineer upon request.

The following new paragraph is inserted after the last paragraph:

> All cure box costs shall be incidental to the associated item of Work.

6-02.3(5)I Vacant

This Section, including title, is revised to read:

6-02.3(5)I Test Section for Cast-In-Place SCC

Unless otherwise approved by the Engineer, the Contractor shall construct a test section of the element being constructed of cast-in-place SCC. The Contractor shall confirm, through the SCC placement operation in the test section, the SCC flows the distance required, completely filling the forms and encapsulating the reinforcement as required without leaving voids and pockets and causing segregation of the SCC mix. The test section forms, reinforcing steel and concrete placing operations shall be identical to those to be used in the production elements.

For horizontal elements, the test section shall simulate the flow of concrete for the maximum distance anticipated during production concrete placement. The depth and width of the test section for horizontal element may be smaller than the actual depth and width of the element to be cast. For vertical elements, the test section shall be a minimum of 33-percent of the height of the tallest element to be constructed. The

Provided to Builders Exchange of WA, Inc. For usage Conditions Agreement see www.bxwa.com - Always Verify Scale

Contractor shall submit Type 2 Working Drawings consisting of formwork and reinforcement details of the test section and SCC placement procedures.

After removing the forms, the test section will be inspected for signs of honeycombs, cracks, aggregate segregation, sedimentation, cold joints, and other surface and concrete placement defects. If such defects are present, the Contractor shall revise the formwork and SCC placement procedures as necessary to eliminate such defects.

Acceptance of the test section and the SCC mix design is contingent on acceptable visual inspection, and a minimum of two 4-inch minimum diameter core samples taken from the placement location and the furthest-most limits of the concrete as identified by the Engineer. The number of core locations will be specified by the Engineer. The difference in average unit weight of the locations represented by the core samples shall be less than 5-percent.

The Contractor shall use the same SCC placement procedures confirmed by the Engineer accepted test section for casting the production members.

6-02.3(6)A2 Cold Weather Protection

The first sentence in the first paragraph is revised to read:

This Specification applies when the weather forecast on the day of concrete placement predicts air temperatures below 35°F at any time during the 7 days following placement.

The first sentence of the second paragraph is revised to read:

The temperature of the concrete shall be maintained above 50°F during the entire curing period or 7 days, whichever is greater.

6-02.3(9) Vibration of Concrete

This Section is supplemented with the following two new paragraphs:

Vibration of SCC shall only be used as described below or as approved by the Engineer:

1. To prevent the formation of a cold joint in between placement of successive batches of SCC.

2. Near the end of an SCC placement to aid in leveling the SCC in the forms.

When vibration of SCC is allowed, the magnitude and duration of the applied vibration shall be kept as minimal as possible.

6-02.3(10)A Preconstruction Meeting

This Section, including title, is revised to read:

Provided to Builders Exchange of WA, Inc. For usage Conditions Agreement see www.bxwa.com - Always Verify Scale

6-02.3(10)A Pre-Deck Pour Meeting

A pre-deck pour meeting shall be held 5 to 10 working days before placing deck concrete to discuss construction procedures, personnel, equipment to be used, concrete sampling and testing and deck finishing and curing operations. Those attending shall include, at a minimum, the superintendent, foremen in charge of placing and finishing concrete, and representatives from the concrete supplier and the concrete pump truck supplier.

If the project includes more than one bridge deck, and if the Contractor's key personnel change between concreting operations, or at request of the Engineer, additional conferences shall be held before each deck placement.

6-02.3(10)D Concrete Placement, Finishing, and Texturing

This Section's content is deleted and replaced with the following new sub-sections:

6-02.3(10)D1 Test Slab Using Bridge Deck Concrete

After the Contractor receives the Engineer's approval for the Class 4000D concrete mix design, and a minimum of seven calendar days prior to the first placement of bridge deck concrete, the Contractor shall construct a test slab using concrete of the approved mix design.

The test slab may be constructed on grade, shall have a minimum thickness of eight-inches, shall have minimum plan dimensions of 10-feet along all four edges, and shall be square or rectangular.

During construction of the test slab, the Contractor shall demonstrate concrete sampling and testing, use of the concrete temperature monitoring system, the concrete fogging system, concrete placement system, and the concrete finishing operation. The Contractor shall conduct the demonstration using the same type of equipment to be used for the production bridge decks, except that the Contractor may elect to finish the test slab with a hand-operated strike-board.

After the construction of the test slab and the demonstration of bridge deck construction operations is complete, the Contractor shall remove and dispose of the test slab in accordance with Sections 2-02.3 and 2-03.3(7)C.

6-02.3(10)D2 Preparation for Concrete Placement

Before placing bridge approach slab concrete, the Subgrade shall be constructed in accordance with Sections 2-06 and 5-05.3(6).

Before any concrete is placed, the finishing machine shall be operated over the entire length of the deck/slab to check screed deflection. Concrete placement may begin only if the Engineer approves after this test.

Immediately before placing concrete, the Contractor shall check (and adjust if necessary) all falsework and wedges to minimize settlement and deflection from the added mass of the concrete deck/slab. The Contractor shall also install devices, such as telltales, by which the Engineer can readily measure settlement and deflection.

6-02.3(10)D3 Concrete Placement

Provided to Builders Exchange of WA, Inc. For usage Conditions Agreement see www.bxwa.com - Always Verify Scale

The placement operation shall cover the full width of the bridge deck or the full width between construction joints. The Contractor shall locate any construction joint over a beam or web that can support the deck/slab on either side of the joint. The joint shall not occur over a pier unless the Plans permit. Each joint shall be formed vertically and in true alignment. The Contractor shall not release falsework or wedges supporting bridge deck placement sections on either side of a joint until each side has aged as these Specifications require.

Placement of concrete for bridge decks and bridge approach slabs shall comply with Section 6-02.3(6). In placing the concrete, the Contractor shall:

1. Place it (without segregation) against concrete placed earlier, as near as possible to its final position, approximately to grade, and in shallow, closely spaced piles;

2. Consolidate it around reinforcing steel by using vibrators before strike-off by the finishing machine;

3. Not use vibrators to move concrete;

4. Not revibrate any concrete surface areas where workers have stopped prior to screeding;

5. Remove any concrete splashed onto reinforcing steel in adjacent segments before concreting them;

6. Maintain a slight excess of concrete in front of the screed across the entire width of the placement operation;

7. Operate the finishing machine to create a surface that is true and ready for final finish without overfinishing or bringing excessive amounts of mortar to the surface; and

8. Leave a thin, even film of mortar on the concrete surface after the last pass of the finishing machine pan.

Workers shall complete all post screeding operations without walking on the concrete. This may require Work bridges spanning the full width of the deck/slab.

After removing the screed supports, the Contractor shall fill the voids with concrete (not mortar).

If the surface left by the finishing machine is porous, rough, or has minor irregularities, the Contractor shall float the surface of the concrete. Floating shall leave a smooth and even surface. Float finishing shall be kept to the minimum number of passes necessary to seal the surface. The floats shall be at least 4-feet long. Each transverse pass of the float shall overlap the previous pass by at least half the length of the float. The first floating shall be at right angles to the strike-off. The second floating shall be at right angles to the centerline of the span. A smooth riding surface shall be maintained across construction joints.

Provided to Builders Exchange of WA, Inc. For usage Conditions Agreement see www.bxwa.com - Always Verify Scale

The edge of completed Roadway slabs at expansion joints and compression seals shall have a 3/8-inch radius.

After floating, but while the concrete remains plastic, the Contractor shall test the entire deck/slab for flatness (allowing for crown, camber, and vertical curvature). The testing shall be done with a 10-foot straightedge held on the surface. The straightedge shall be advanced in successive positions parallel to the centerline, moving not more than one half the length of the straightedge each time it advances. This procedure shall be repeated with the straightedge held perpendicular to the centerline. An acceptable surface shall be one free from deviations of more than 1/8-inch under the 10-foot straightedge.

If the test reveals depressions, the Contractor shall fill them with freshly mixed concrete, strike off, consolidate, and refinish them. High areas shall be cut down and refinished. Retesting and refinishing shall continue until a surface conforming to the requirements specified above is produced.

6-02.3(10)D4 Monitoring Bridge Deck Concrete Temperature After Placement

The Contractor shall monitor and record the concrete temperature and ambient temperature hourly for seven calendar days after placement. The Contractor shall monitor and record concrete temperature by placing two maturity meter temperature monitoring devices in the bridge deck at locations specified by the Engineer. The Contractor shall monitor ambient temperature using maturity meters near the locations where concrete temperature is being monitored. When the bridge deck is being enclosed and heated to meet cold weather requirements, ambient temperature readings shall be taken within the enclosure. The Contractor shall submit the concrete temperature and ambient temperature data to the Engineer in spreadsheet format within 14 calendar days from placing the bridge deck concrete.

The Contractor shall submit the type and model of maturity meter temperature monitoring device, and the associated devices responsible for recording and documenting the temperature and curing time, to the Engineer at least 14 calendar days prior to the pre-concreting conference for the first bridge deck to be cast. The placement and operation of the temperature monitoring devices and associated devices will be an agenda item at the pre-concreting conference for the first bridge deck to be cast.

6-02.3(10)D5 Bridge Deck Concrete Finishing and Texturing

Except as otherwise specified for portions of bridge decks receiving an overlay or sidewalk under the same Contract, the Contractor shall texture the surface of the bridge deck as follows:

> The Contractor shall texture the bridge deck using diamond tipped saw blades mounted on a power driven, self-propelled machine that is designed to texture concrete surfaces. The grooving equipment shall provide grooves that are 1/8" ± 1/64" wide, 3/16" ± 1/16" deep, and spaced at 3/4" ± 1/8". The bridge deck shall not be textured with a metal tined comb.

Provided to Builders Exchange of WA, Inc. For usage Conditions Agreement see www.bxwa.com - Always Verify Scale

The Contractor shall submit the type of grooving equipment to be used to the Engineer for approval 30 calendar days prior to performing the Work. The Contractor shall demonstrate that the method and equipment for texturing the bridge deck will not chip, spall or otherwise damage the deck. The Contractor shall not begin texturing the bridge deck until receiving the Engineer's approval of the Contractor's method and equipment.

Unless otherwise approved by the Engineer, the Contractor shall texture the concrete bridge deck surface either in a longitudinal direction, parallel with centerline or in a transverse direction, perpendicular with centerline. The Contractor shall texture the bridge deck surface to within 3-inches minimum and 15-inches maximum of the edge of concrete at expansion joints, within 1-foot minimum and 2-feet maximum of the curb line, and within 3-inches minimum and 9-inches maximum of the perimeter of bridge drain assemblies.

The Contractor shall contain and collect all concrete dust and debris generated by the bridge deck texturing process, and shall dispose of the collected concrete dust and debris in accordance with Section 2-03.3(7)C.

If the Plans call for placement of a sidewalk or an HMA or concrete overlay on the bridge deck, the Contractor shall produce the final finish of these areas by dragging a strip of damp, seamless burlap lengthwise over the bridge deck or by brooming it lightly. Approximately 3-feet of the drag shall contact the surface, with the least possible bow in its leading edge. It shall be kept wet and free of hardened lumps of concrete. When the burlap drag fails to produce the required finish, the Contractor shall replace it. When not in use, it shall be lifted clear of the bridge deck.

After the bridge deck has cured, the surface shall conform to the surface smoothness requirements specified in Section 6-02.3(10)D3.

The surface texture on any area repaired to address out-of-tolerance surface smoothness shall match closely that of the surrounding bridge deck area at the completion of the repair. Methods used to remove high spots shall cut through the mortar and aggregate without breaking or dislodging the aggregate or causing spalls.

6-02.3(10)D6 Bridge Approach Slab Finishing and Texturing

Bridge approach slabs that are being built as part of a bridge construction project shall be textured in accordance with Section 6-02.3(10)D5. All other bridge approach slabs shall be textured, using metal tined combs in the transverse direction, except bridge approach slabs receiving an overlay in the same Contract shall be finished as specified in Section 6-02.3(10)D5 only.

The comb shall be made of a single row of metal tines. It shall leave striations in the fresh concrete approximately 3/16-inch deep by 1/8-inch wide and spaced approximately 1/2-inch apart. The Engineer will decide actual depths at the site. If the comb has not been approved, the Contractor shall obtain the Engineer's approval by demonstrating it on a test section. The Contractor may operate the combs manually or mechanically, either singly or with several placed end to end. The timing and method used shall produce the required texture without displacing larger particles of aggregate.

Provided to Builders Exchange of WA, Inc. For usage Conditions Agreement see www.bxwa.com - Always Verify Scale

Texturing shall end 2-feet from curb lines. This 2-foot untextured strip shall be hand finished with a steel trowel.

Surface smoothness, high spots, and low spots shall be addressed as specified in Section 6-02.3(10)D5. The surface texture on any area cut down or built up shall match closely that of the surrounding bridge approach slab area. The entire bridge approach slab shall provide a smooth riding surface.

6-02.3(10)F Bridge Approach Slab Orientation and Anchors

In the first paragraph, the following sentence is inserted after the first sentence:

Unless otherwise shown in the Plans, the pavement end of the bridge approach slab shall be constructed normal to the Roadway centerline.

The following new paragraph is inserted before the last paragraph:

The compression seal shall be a 2-1/2 inch wide gland selected from the current Qualified Products List.

6-02.3(11) Curing Concrete

Items number 1 through 4 are deleted and replaced with the following 5 new numbered items:

1. Bridge sidewalks, roofs of cut and cover tunnels — curing compound covered by white, reflective type sheeting or continuous wet curing. Curing by either method shall be for at least 10 days.

2. Bridge decks — See Section 6-02.3(11)B.

3. Bridge approach slabs (Class 4000A concrete) - 2 coats of curing compound and continuous wet cure for at least 10-days.

4. Concrete barriers and rail bases – See Section 6-02.3(11)A.

5. All other concrete surfaces — continuous wet cure for at least three days.

In the second paragraph, the first sentence is replaced with the following three new sentences:

During the continuous wet cure, the Contractor shall keep all exposed concrete surfaces saturated with water. Formed concrete surfaces shall be kept in a continuous wet cure by leaving the forms in place. If forms are removed during the continuous wet cure period, the Contractor shall treat the concrete as an exposed concrete surface.

The third paragraph is revised to read:

When curing Class 4000A, two coats of curing compound that complies with Section 9-23.2 shall be applied immediately (not to exceed 15 min.) after tining any portion of the bridge approach slab. The continuous wet cure shall be established as soon as the concrete has set enough to allow covering without damaging the finish.

Provided to Builders Exchange of WA, Inc. For usage Conditions Agreement see www.bxwa.com - Always Verify Scale

In the fifth paragraph, the first sentence is revised to read:

If the Plans call for an asphalt overlay on the bridge approach slab, the Contractor shall use the clear curing compound (Type 1, Class B), applying at least 1 gallon per 150 square feet to the concrete surface.

The eighth paragraph is deleted.

6-02.3(11)A2 Slip-Form Barrier

In the fourth paragraph, item number 1, "Type 1D" is revised to read "Type 1".

6-02.3(11)B Curing Bridge Decks

This new Section is supplemented with the following new sub-sections:

6-02.3(11)B1 Equipment

The Contractor shall maintain a wet sheen, without developing pooling or sheeting water, using a fogging apparatus consisting of pressure washers with a minimum nozzle output of 1,500 psi, or other means approved by the Engineer.

The Contractor shall submit a bridge deck curing plan to the Engineer a minimum 14 calendar days prior to the pre-concreting conference. The Contractor's plan shall describe the sequence and timing that will be used to fog the bridge deck, apply pre-soaked burlap, install soaker hoses and cover the deck with white reflective sheeting.

6-02.3(11)B2 Curing

The fogging apparatus shall be in place and charged for fogging prior to beginning concrete placement for the bridge deck.

The Contractor shall presoak all burlap to be used to cover the deck during curing.

Immediately after the finishing machine passes over finished concrete, the Contractor shall implement the following tasks:

1. The Contractor shall fog the bridge deck while maintaining a wet sheen without developing pooling or sheeting water.

2. The Contractor shall apply the presoaked burlap to the top surface to fully cover the deck without damaging the finish, other than minor marring of the concrete surface. The Contractor shall not apply curing compound.

3. The Contractor shall continue to keep the burlap wet by fog spraying until the burlap is covered by soaker hoses and white reflective sheeting. The Contractor shall place the soaker hoses and whiter reflective sheeting after the concrete has achieved initial set. The Contractor shall charge the soaker hoses frequently so as to keep the burlap covering the entire deck wet during the course of curing.

As an alternative to tasks 2 and 3 above, the Contractor may propose a curing system using proprietary curing blankets specifically manufactured for bridge deck curing. Details of the proprietary curing blanket system, including product literature and

Provided to Builders Exchange of WA, Inc. For usage Conditions Agreement see www.bxwa.com - Always Verify Scale

details of how the system is to be installed and maintained, shall be submitted to the Engineer for approval.

The wet curing regime as described shall remain in place for at least 14 consecutive calendar days.

6-02.3(12)A Construction Joints in New Construction

The third paragraph is deleted and replaced with the following three new paragraphs:

If the Plans require a roughened surface on the joint, the Contractor shall strike it off to leave grooves at right angles to the length of the member. Grooves shall be installed using one of the following options:

1. Grooves shall be ½ to 1 inch wide, ¼ to ½ inch deep, and spaced equally at twice the width of the groove. Grooves shall terminate approximately 1 ½-inches from the face of concrete.

2. Grooves shall be 1 to 2 inches wide, a minimum of ½-inch deep, and spaced a maximum of three times the width of the groove. Grooves shall terminate approximately 1 ½-inches from the face of concrete.

If the Engineer approves, the Contractor may use an alternate method to produce a roughened surface on the joint, provided that such an alternate method leaves a roughened surface of at least a ¼-inch amplitude.

If the first strike-off does not produce the required roughness, the Contractor shall repeat the process before the concrete reaches initial set. The final surface shall be clean and without laitance or loose material.

6-02.3(12)B Construction Joints Between Existing and New Construction

The phrase "by method(s) as approved by the Engineer" is deleted from each paragraph in this Section.

6-02.3(13) Expansion Joints

The first sentence of the second paragraph is revised to read:

Joints made of a vulcanized, elastomeric compound (with neoprene as the only polymer) shall be installed with a lubricant adhesive as recommended by the manufacturer.

In the third paragraph, "injuring" is revised to read "damaging".

The following two new subsections are added:

6-02.3(13)A Strip Seal Expansion Joint System

The Contractor shall submit Working Drawings consisting of the strip seal expansion joint Shop Drawings in accordance with Section 6-03.3(7). These Plans shall include, at a minimum, the following:

Provided to Builders Exchange of WA, Inc. For usage Conditions Agreement see www.bxwa.com - Always Verify Scale

1. Plan, elevation, and sections of the joint system and all components, with dimensions and tolerances.

2. All material designations.

3. Manufacturer's written installation procedure.

4. Corrosion protection system used on the metal components.

5. Locations of welded shear studs, lifting mechanisms, temperature setting devices, and construction adjustment devices.

6. Method of sealing the system to prevent leakage of water through the joint.

The strip seal shall be removable and replaceable.

The metal components shall conform to ASTM A 36, ASTM A 992, or ASTM A 572, and shall be protected against corrosion by one of the following methods:

1. Zinc metallized in accordance with Section 6-07.3(14).

2. Hot-dip galvanized in accordance with AASHTO M 111.

3. Paint in accordance with Section 6-07.3(9). The color of the top coat shall be Federal Standard 595 Color No. 26420. The surfaces embedded in concrete shall be painted only with a shop primer coat of paint conforming to Section 9-08.1(2)C.

The strip seal gland shall be continuous for the full length of the joint with no splices permitted, unless otherwise shown in the Plans.

Other than items shown in the Plans, threaded studs used for construction adjustments are the only items that may be welded to the steel shapes provided they are removed by grinding after use, and the area repaired by application of an approved corrosion protection system.

If the opening between the steel shapes is anticipated to be less than 1-1/2 inches at the time of seal installation, the seal may be installed prior to encasement of the steel shapes in concrete.

After the joint system is installed, the joint shall be flooded with water and inspected, from below the joint, for leakage. If leakage is observed, the joint system shall be repaired by the Contractor, as recommended by the manufacturer.

6-02.3(13)B Compression Seal Expansion Joint System

Compression seal glands shall be selected from the current Qualified Products List and sized as shown in the Plans.

The compression seal expansion joint system shall be installed in accordance with the manufacturer's written recommendations. The Contractor shall submit a Type 1

Provided to Builders Exchange of WA, Inc. For usage Conditions Agreement see www.bxwa.com - Always Verify Scale

Working Drawing consisting of the manufacturer's written installation procedure and repair procedures if leakage testing fails.

After the joint system is installed, the joint area shall be flooded with water and inspected, from below the joint, for leakage. If leakage is observed, the joint system shall be repaired by the Contractor, as recommended by the manufacturer.

6-02.3(14) Finishing Concrete Surfaces

The last sentence of the first paragraph is revised to read:

The Contractor shall clean and refinish any stained or discolored surfaces.

The following new subsection is added:

6-02.3(14)D General Requirements for Concrete Surface Finishes Produced by Form Liners

Horizontal and vertical joints shall be spliced in accordance with the manufacturer's printed instructions. The Contractor shall submit a Type 1 Working Drawing consisting of the manufacturer's joint splice instructions.

Horizontal splicing of ABS and plastic form liners to achieve the required height is not permitted and there shall be no horizontal joints. The concrete formed with ABS and plastic form liners shall be given a light sandblast to remove the glossy finish.

Side forms, traffic barrier forms, and pedestrian barrier forms using these form liners may be removed after 24 hours provided the concrete mix used includes a water-reducing admixture, and the concrete reaches 1,400 psi minimum compressive strength before form removal. Concrete in load supporting forms utilizing these form liners shall be cured in accordance with Section 6-02.3(17)N. Once the forms are removed, the Contractor shall treat the joint areas by patching or light sandblasting as required by the Engineer to ensure that the joints are not visible.

Form liners shall be cleaned, reconditioned, and repaired before each use. Form liners with repairs, patches, or defects which, in the opinion of the Engineer, would result in adverse effects to the concrete finish shall not be used.

Care shall be taken to ensure uniformity of color throughout the textured surface. A change in form release agent will not be allowed.

All surfaces formed by the form liner shall also receive a Class 2 surface finish. Form ties shall be a type that leaves a clean hole when removed. All spalls and form tie holes shall be filled as specified for a Class 2 surface finish.

6-02.3(14)C Pigmented Sealer for Concrete Surfaces

The first sentence (up until the colon) is revised to read:

The Contractor shall submit a Type 1 Working Drawing consisting of the pigmented sealer manufacturer's written instructions covering, at a minimum, the following:

The second paragraph is deleted.

Provided to Builders Exchange of WA, Inc. For usage Conditions Agreement see www.bxwa.com - Always Verify Scale

In the last sentence of the third paragraph, "approval" is revised to read "acceptance".

6-02.3(15) Date Numerals

The third sentence in the first paragraph is revised to read:

When an existing Structure is widened or when traffic barrier is placed on an existing Structure, the date shall be for the year in which the original Structure was completed.

6-02.3(16) Plans for Falsework and Formwork

This Section is revised to read:

The Contractor shall submit all Plans for falsework and formwork as Type 2E Working Drawings. Submittal is not required for footing or retaining wall formwork if the wall is 4 feet or less in height (excluding pedestal height).

The design of falsework and formwork shall be based on:

1. Applied loads and conditions which are no less severe than those described in Section 6-02.3(17)A, Design Loads;

2. Allowable stresses and deflections which are no greater than those described in Section 6-02.3(17)B, Allowable Stresses and Deflections;

3. Special loads and requirements no less severe than those described in Section 6-02.3(17)C, Falsework and Formwork at Special Locations;

4. Conditions required by other Sections of 6-02.3(17), Falsework and Formwork.

The falsework and formwork plans shall be scale drawings showing the details of proposed construction, including: sizes and properties of all members and components; spacing of bents, posts, studs, wales, stringers, wedges and bracing; rates of concrete placement, placement sequence, direction of placement, and location of construction joints; identification of falsework devices and safe working loads as well as identification of any bolts or threaded rods used with the devices including their diameter, length, type, grade, and required torque. The falsework plans shall show the proximity of falsework to utilities or any nearby Structures including underground Structures. Formwork accessories shall be identified according to Section 6-02.3(17)H, Formwork Accessories. All assumptions, dimensions, material properties, and other data used in making the structural analysis shall be noted on the Drawing.

The Contractor shall furnish associated design calculations to the Engineer as part of the submittal. The design calculations shall show the stresses and deflections in load supporting members. Construction details which may be shown in the form of sketches on the calculation sheets shall be shown in the falsework or formwork drawings as well. Falsework or formwork plans will be rejected in cases where it is necessary to refer to the calculation sheets for information needed for complete understanding of the falsework and formwork plans or how to construct the falsework and formwork.

Provided to Builders Exchange of WA, Inc. For usage Conditions Agreement see www.bxwa.com - Always Verify Scale

Each sheet of falsework and formwork plans shall carry the following:

1. The initials and dates of all participating design professionals.

2. Clear notation of all revisions including identification of who authorized the revision, who made the revision, and the date of the revision.

3. The Contract number, Contract title, and sequential sheet number. These shall also be on any related documents.

4. Identify where the falsework and formwork plan will be utilized by referencing Contract Plan sheet number and related item or detail.

6-02.3(16)A Nonpreapproved Falsework and Formwork Plans

This Section, including title, is deleted in its entirety and replaced with the following:

6-02.3(16)A Vacant

6-02.3(16)B Preapproved Formwork Plans

This Section, including title, is revised to read:

6-02.3(16)B Pre-Contract Review of Falsework and Formwork Plans

The Contractor may request pre-Contract review of formwork plans for abutments, wingwalls, diaphragms, retaining walls, columns, girders and beams, box culverts, railings, and bulkheads. Plans for falsework supporting the bridge deck for interior spans between precast prestressed concrete girders may also be submitted for pre-Contract review.

To obtain pre-Contract review, the Contractor shall electronically submit Drawings and design calculations in PDF format directly to:

BridgeConstructionSupport@wsdot.wa.gov

The Bridge and Structures Office, Construction Support Engineer will return the falsework or formwork plan to the Contractor with review notes, an effective date of review, and any revisions needed prior to use. For each Contract on which the pre-reviewed falsework or formwork plans will be used, the Contractor shall submit a copy to the Engineer. Construction shall not begin until the Engineer has given concurrence.

If the falsework or formwork being constructed has any deviations to the preapproved falsework or formwork plan, the Contractor shall submit plan revisions for review and approval in accordance with Section 6-02.3(16).

6-02.3(17)A Design Loads

The fifth paragraph is revised to read:

Live loads shall consist of a minimum uniform load of not less than 25 psf, applied over the entire falsework plan area, plus the greater of:

Provided to Builders Exchange of WA, Inc. For usage Conditions Agreement see www.bxwa.com - Always Verify Scale

1. Actual weights of the deck finishing equipment applied at the rails, or;

2. A minimum load of 75 pounds per linear foot applied at the edge of the bridge deck.

6-02.3(17)J Face Lumber, Studs, Wales, and Metal Forms

The second and third to last paragraphs are deleted.

6-02.3(17)K Concrete Forms on Steel Spans

The second sentence of the last paragraph is revised to read:

The Contractor shall fill the holes with fully torqued ASTM A 325 bolts in accordance with Section 6-03.3(33).

6-02.3(17)O Early Concrete Test Cylinder Breaks

The third paragraph is revised to read:

The cylinders shall be cured in the field in accordance with WSDOT FOP for AASHTO T 23 Section 10.2 Field Curing.

6-02.3(20) Grout for Anchor Bolts and Bridge Bearings

The first five paragraphs are deleted and replaced with the following two new paragraphs:

Grout shall conform to Section 9-20.3(2) for anchor bolts and for bearing assemblies with bearing plates. Grout shall conform to Section 9-20.3(3) for elastomeric bearing pads and fabric pad bearings without bearing plates.

Grout shall be a workable mix with a viscosity that is suitable for the intended application. The Contractor shall receive approval from the Engineer before using the grout.

6-02.3(24)C Placing and Fastening

The twelfth paragraph is revised to read:

In bridge decks, a "mat" is two adjacent and perpendicular layers of reinforcing steel. Top and bottom mats shall be supported adequately to hold both in their proper positions. If No. 4 bars make up the lower layer of steel in a mat, it shall be blocked at not more than 3-foot intervals (or 4-foot intervals for bars No. 5 and larger). Wire ties to girder stirrups shall not be considered as blocking. To provide a rigid mat, the Contractor shall add other supports and tie wires to the top mat as needed.

In the fourteenth paragraph, the description following "2½ inches between" is revised to read:

Adjacent bars in a layer. Bridge deck and bridge approach slab bars and the top of the slab.

In the fourteenth paragraph, the description following "2 inches between" is supplemented with the following new sentence:

Provided to Builders Exchange of WA, Inc. For usage Conditions Agreement see www.bxwa.com - Always Verify Scale

Bars and the surface of concrete when not specified otherwise in this Section or in the Plans.

In the fourteenth paragraph, the first sentence in the description following "1½ inches between" is deleted.

The fifteenth paragraph is revised to read:

Except for top cover in bridge decks and bridge approach slabs, cover to ties and stirrups may be ½ inch less than the values specified for main bars but shall not be less than 1 inch. Minimum concrete cover and clearances to headed steel reinforcing bars shall also be provided to the outermost part of the head of the bar.

In the sixteenth paragraph, the first item in the second subparagraph is revised to read:

The clearance to the top surface of bridge decks and bridge approach slabs +¼ in/-0".

6-02.3(24)E Welding Reinforced Steel

This Section is revised to read:

Welding of steel reinforcing bars shall conform to the requirements of ANSI/AWS D1.4 Structural Welding Code - Reinforcing Steel, latest edition, except where superseded by the Special Provisions, Plans, and these Specifications.

Before any welding begins, the Contractor shall submit a Type 2 Working Drawing consisting of the welding procedure for each type of welded splice to be used, including the weld procedure Specifications and joint details. The weld procedure Specifications shall be written on a form taken from AWS D1.4 Annex A, or equivalent. Test results of tensile strength, macroetch, and visual examination shall be included. The form shall be signed and dated.

Welders shall be qualified in accordance with AWS D1.4. The Contractor shall be responsible for the testing and qualification of welders, and shall submit Type 2 Working Drawings consisting of welder qualification and retention records. The weld joint and welding position a welder is qualified in shall be in accordance with AWS D1.4. The welder qualifications shall remain in effect indefinitely unless, (1) the welder is not engaged in a given process of welding for which the welder is qualified for a period exceeding six months, or (2) there is some specific reason to question a welder's ability.

Filler metals used for welding reinforcing bars shall be in accordance with AWS D1.4 Table 5.1. All filler metals shall be low-hydrogen and handled in compliance with low-hydrogen practices specified in the AWS code.

Short circuiting transfer with gas metal arc welding will not be allowed. Slugging of welds will not be allowed.

For the purpose of compatibility with AWS D1.4, welded lap splices for spiral or hoop reinforcing shall be considered Flare-V groove welds, indirect butt joints.

Provided to Builders Exchange of WA, Inc. For usage Conditions Agreement see www.bxwa.com - Always Verify Scale

The Contractor is responsible for using a welding sequence that will limit the alignment distortion of the bars due to the effects of welding. The maximum out-of-line permitted will be 1/4 inch from a 3.5-foot straight-edge centered on the weld and in line with the bar.

The ground wire from the welding machine shall be clamped to the bar being welded.

Where epoxy-coated steel reinforcing bars are specified to be spliced by welding, the epoxy coating shall be left off or removed from the surfaces to be heated, but in no cases less than six inches of each bar being welded. After the welding is complete, the Contractor shall apply epoxy patching material to the uncoated portions of the bar in accordance with Section 6-02.3(24)H.

6-02.3(25) Prestressed Concrete Girders

This Section is revised to read:

The Contractor shall perform quality control inspection. The manufacturing plant of prestressed concrete girders shall be certified by the Precast/Prestressed Concrete Institute's Plant Certification Program for the type of prestressed member to be produced and shall be approved by WSDOT as a Certified Prestress Concrete Fabricator prior to the start of production. WSDOT certification will be granted at, and renewed during, the annual prestressed plant review and approval process in accordance with WSDOT Materials Manual M 46-01.04 Standard Practice QC 6.

Prior to the start of production of girders, the Contractor shall advise the Engineer of the production schedule. The Contractor shall give the Inspector safe and free access to the Work. If the Inspector observes any nonspecification Work or unacceptable quality control practices, the Inspector will advise the plant manager. If the corrective action is not acceptable to the Engineer, the girder(s) will be subject to rejection by the Engineer.

The Contracting Agency intends to perform Quality Assurance Inspection. By its inspection, the Contracting Agency intends only to facilitate the Work and verify the quality of that Work. This inspection shall not relieve the Contractor of any responsibility for identifying and replacing defective material and workmanship.

The various types of prestressed concrete girders are:

Prestressed Concrete I Girder – Refers to a prestressed concrete girder with a flanged I shaped cross section, requiring a cast-in-place concrete deck to support traffic loads. WSDOT standard girders in this category include Series W42G, W50G, W58G, and W74G.

Prestressed Concrete Wide Flange I Girder – Refers to a prestressed concrete girder with an I shaped cross section with wide top and bottom flanges, requiring a cast-in-place concrete deck to support traffic loads. WSDOT standard girders in this category include Series WF36G, WF42G, WF50G, WF58G, WF66G, WF74G, WF83G, WF95G, and WF100G.

Provided to Builders Exchange of WA, Inc. For usage Conditions Agreement see www.bxwa.com - Always Verify Scale

Prestressed Concrete Wide Flange Deck Girder – Refers to a prestressed concrete wide flange I girder with extended top flange widths designed to support traffic loads, and designed to be mechanically connected at the flange edges to adjacent girders at the job site. WSDOT standard girders in this category include Series WF39DG, WF45DG, WF53DG, WF61DG, WF69DG, WF77DG, WF86DG, WF98DG, and WF103DG.

Prestressed Concrete Wide Flange Thin Deck Girder – Refers to a prestressed concrete wide flange I girder with extended top flange widths requiring a cast-in-place concrete deck to support traffic loads. Flange edges extend to flange edges of adjacent girders at the job site. WSDOT standard girders in this category include Series WF36TDG, WF42TDG, WF50TDG, WF58TDG, WF66TDG, WF74TDG, WF83TDG, WF95TDG, and WF100TDG.

Prestressed Concrete Deck Bulb Tee Girder – Refers to a prestressed concrete girder with a top flange designed to support traffic loads, and designed to be mechanically connected at the flange edges to adjacent girders at the job site. WSDOT standard girders in this category include Series W35DG, W41DG, W53DG, and W65DG.

Prestressed Concrete Slab Girder – Refers to a prestressed concrete slab girder, with or without voids. Prestressed concrete slab girders are mechanically connected at the member edges to adjacent girders at the job site. Prestressed concrete ribbed section girders and prestressed concrete double tee girders shall conform to the requirements specified for prestressed concrete slab girders.

Prestressed Concrete Tub Girder – Refers to prestressed concrete tub girders with a U shaped cross section, requiring a cast-in-place concrete deck to support traffic loads. WSDOT standard girders in this category include Series U**G* or Series UF**G*, where U specifies webs without top flanges, UF specifies webs with top flanges, ** specifies the girder height in inches, and * specifies the bottom flange width in feet.

Spliced Prestressed Concrete Girder – Refers to prestressed concrete girders initially fabricated in segments which are longitudinally spliced together with cast-in-place concrete closures and post tensioning. Post tensioning materials and construction shall conform to Section 6-02.3(26), except that ducts for prestressed concrete wide flange I girders may be 24-gage, semi-rigid, galvanized, corrugated, ferrous metal. WSDOT prestressed concrete wide flange I girders in this category include Series WF74PTG, WF83PTG, WF95PTG, and WF100PTG. WSDOT prestressed concrete tub girders in this category include Series U**PTG* and UF**PTG* where U, UF, **, and * are as defined for prestressed concrete tub girders.

6-02.3(25)A Shop Drawings

This Section is revised to read:

Shop drawings for prestressed concrete girders shall be submitted as Type 2 Working Drawings. The only deviations to the Plans that will be permitted are those approved by the annual plant approval process and those listed below:

1. Addition of inserts for construction purposes including falsework

Provided to Builders Exchange of WA, Inc. For usage Conditions Agreement see www.bxwa.com - Always Verify Scale

2. Small penetrations no larger than 1" diameter for construction purposes including overhang bracket supports, deck formwork hangers and temporary girder bracing. Penetrations in top flanges shall be offset from the edge of the flange the minimum distance shown in the Plans.

3. Small penetrations no larger than 2" in diameter for girder shipping tie-downs.

4. Small adjustments in girder length to account for elastic shortening, creep and shrinkage

5. Strand adjustments, as long as the center of gravity of the strands remains at the location shown in the Plans and concrete cover is not reduced

6. Diaphragm web hole vertical adjustments to avoid harped strands

7. Substitution of welded wire reinforcement for conventional reinforcing steel

Shop Drawings shall show the size and location of all inserts and penetrations. Penetrations for deck formwork and falsework shall match the deck formwork Working Drawings. Field-drilled holes in prestressed concrete girders are not allowed.

Deformed welded wire reinforcement conforming to Sections 9-07.7 and 9-07.8 may be substituted for the mild steel reinforcement shown in the Plans. The substitution shall be submitted as a Type 2E Working Drawing. The AASHTO LRFD Bridge Design Specification requirements (latest edition including interims) shall be satisfied, including at a minimum the following Articles:

5.8.2.6 Types of Transverse Reinforcement

5.8.2.8 Design and Detailing Requirements

5.10.3 Spacing of Reinforcement

5.10.6.3 Ties

5.10.7 Transverse Reinforcement for Flexural Members

5.10.8 Shrinkage and Temperature Reinforcement

5.10.10 Pretensioned Anchorage Zones

5.11.2.5 Welded Wire Fabric

5.11.2.6.3 Anchorage of Wire Fabric Reinforcement

5.11.6 Splices of Welded Wire Fabric

Yield strengths in excess of 75.0 ksi shall not be used for welded wire reinforcement.

Provided to Builders Exchange of WA, Inc. For usage Conditions Agreement see www.bxwa.com - Always Verify Scale

The spacing of vertical welded wire reinforcement within slabs and girder webs shall not exceed 18 inches or the height of the member minus 3 inches, whichever is less. Longitudinal wires and welds are permitted in girder flanges but shall be excluded from girder webs. For vertical welded wire reinforcement in prestressed concrete slab girders, no welded joints other than those required for anchorage shall be permitted. Epoxy-coated wire and welded wire reinforcement shall conform to Section 9-07.3 with the exception that ASTM A884 Class A Type I shall be used instead of ASTM A775.

End regions of prestressed concrete girders shall meet the requirements of WSDOT Bridge Design Manual LRFD (M23-50) Sections 5.6.2.F and 5.6.2.G.

Shop Drawings for spliced prestressed concrete girders shall also conform to Section 6-02.3(26)A. The Working Drawings for spliced prestressed concrete girders shall include all details related to the post-tensioning operations in the field, including details of hardware required, tendon geometry, blockout details, and details of additional or modified steel reinforcing bars required in cast-in-place closures.

6-02.3(25)B Casting

This Section, including title, is revised to read:

6-02.3(25)B Prestressing

Each stressing system shall have a pressure gauge or load cell that will measure jacking force. The gauge shall display pressure accurately and readably with a dial at least 6 inches in diameter or with a digital display. Each jack and its gauge shall be calibrated as a unit and shall be accompanied by a certified calibration chart. The Contractor shall submit a Type 1 Working Drawing consisting of 1 copy of this chart. The cylinder extension during calibration shall be in approximately the position it will occupy at final jacking force.

Jacks and gauges shall be recalibrated and recertified:

1. Annually,

2. After any repair or adjustment, and

3. Anytime there are indications that the jack calibration is in error.

The Engineer may use load cells to check jacks, gauges, and calibration charts before and during tensioning.

All load cells shall be calibrated and shall have an indicator that shows prestressing force in the strand. The range of this cell shall be broad enough that the lowest 10 percent of the manufacturer's rated capacity will not be used to measure jacking force.

From manufacture to encasement in concrete, prestressing strand shall be protected against dirt, oil, grease, damage, and all corrosives. Strand shall be stored in a dry, covered area and shall be kept in the manufacturer's original packaging until placement in the forms. If prestressing strand has been damaged or pitted, it will be rejected. Prestressing strand with rust shall be spot-cleaned with a nonmetallic pad to inspect for any sign of pitting or section loss. Once the prestressing steel has been

Provided to Builders Exchange of WA, Inc. For usage Conditions Agreement see www.bxwa.com - Always Verify Scale

installed, no welds or grounds for welders shall be made on the forms or the steel in the girder, except as specified.

Post-tensioning of spliced prestressed concrete girders shall conform to Section 6-02.3(26) and the following requirements:

1. Before tensioning, the Contractor shall remove all side forms from the cast-in-place concrete closures. From this point until 48 hours after grouting the tendons, the Contractor shall keep all construction and other live loads off the Superstructure and shall keep the falsework supporting the Superstructure in place.

2. The Contractor shall not tension the post-tensioning reinforcement until the concrete in the cast-in-place closures reaches the minimum compressive strength specified in the Plans. This strength shall be measured with concrete cylinders made of the same concrete and cured under the same conditions as the cast-in-place closures.

3. All post-tensioning shall be completed before placing the sidewalks and barriers on the Superstructure.

6-02.3(25)C Prestressing

This Section, including title, is revised to read:

6-02.3(25)C Casting

Side forms shall be steel except that cast-in-place concrete closure forms for spliced prestressed concrete girders, interior forms of prestressed concrete tub girders, and end bulkhead forms of prestressed concrete girders may be wood. Interior voids for prestressed concrete slab girders with voids shall be formed by either wax soaked cardboard or expanded polystyrene forms. The interior void forms shall be secured in the position as shown in the Working Drawings, and shall remain in place.

All concrete mixes to be used shall be preapproved in the WSDOT plant certification process. The temperature of the concrete when placed shall be between 50°F and 90°F.

Slump shall not exceed 4 inches for normal concrete nor 7 inches with the use of a high range water-reducing admixture, nor 9 inches when both a high range water-reducing admixture is used and the water/cement ratio is less than or equal to 0.35. For self-consolidating concrete (SCC), the slump requirements specified above do not apply, and are instead replaced by the target slump flow and slump flow range specified as part of the SCC mix design.

Air-entrainment is not required in the concrete placed into prestressed concrete girders, including cast-in-place concrete closures for spliced prestressed concrete girders.

This Section is supplemented with the following new sub-section:

Provided to Builders Exchange of WA, Inc. For usage Conditions Agreement see www.bxwa.com - Always Verify Scale

6-02.3(25)C1 Acceptance Testing of Concrete for Prestressed Concrete Girders

Compressive strength cylinders and concrete acceptance testing shall be performed once per prestressed concrete girder or once per fabrication line of prestressed concrete girders. Concrete shall not be placed until fresh concrete testing indicates concrete is within acceptable limits.

Acceptance testing shall be performed by the Contractor and test results shall be submitted to the Engineer. Unless otherwise noted below, the test methods described in Section 6-02.3(5)D shall be followed. Concrete compressive strength shall be in accordance with Section 6-02.3(25)E.

Concrete that is not self-consolidating concrete will be accepted as follows:

1. Temperature within the allowable temperature band.

2. Slump below the maximum allowed.

Concrete that is self-consolidating concrete will be accepted as follows:

1. Temperature within the allowable temperature band.

2. Slump flow within the target slump flow range.

3. VSI less than or equal to 1 in accordance with ASTM C 1611, Appendix X1, using Filling Procedure B.

4. J ring passing ability less than or equal to 1.5-inches.

5. Rapid assessment of static segregation resistance of self-consolidating concrete using penetration test in accordance with ASTM C 1712 shall be less than or equal to 15 mm.

6-02.3(25)D Curing

The first paragraph is revised to read:

During curing, the Contractor shall keep the girder in a saturated curing atmosphere until the girder concrete has reached the required release strength. If the Engineer concurs, the Contractor may shorten curing time by heating the outside of impervious forms. Heat may be radiant, convection, conducted steam, or hot air. With steam, the arrangement shall envelop the entire surface with saturated steam. Hot air curing will not be allowed, unless the Contractor submits Type 2 Working Drawings consisting of the proposed method to envelop and maintain the girder in a saturated atmosphere. Saturated atmosphere means a relative humidity of at least 90 percent. The Contractor shall never allow dry heat to touch the girder surface at any point.

6-02.3(25)E Contractors Control Strength

This Section is revised to read:

Provided to Builders Exchange of WA, Inc. For usage Conditions Agreement see www.bxwa.com - Always Verify Scale

Concrete strength shall be measured on test cylinders cast from the same concrete as that in the girder. These cylinders shall be cured under time-temperature relationships and conditions that simulate those of the girder. If the forms are heated by steam or hot air, test cylinders will remain in the coolest zone throughout curing. If forms are heated another way, the Contractor shall provide a record of the curing time-temperature relationship for the cylinders for each girder to the Engineer. When two or more girders are cast in a continuous line and in a continuous pour, a single set of test cylinders may represent all girders provided the Contractor demonstrates uniformity of casting and curing to the satisfaction of the Engineer.

The Contractor shall mold, cure, and test enough of these cylinders to satisfy Specification requirements for measuring concrete strength. The Contractor may use 4- by 8-inch or 6- by 12-inch cylinders.

Test cylinders may be cured in a moist room or water tank in accordance with WSDOT FOP for AASHTO T 23 after the girder concrete has obtained the required release strength. If, however, the Contractor intends to ship the girder prior to the standard 28-day strength test, the design strength for shipping shall be determined from cylinders placed with the girder and cured under the same conditions as the girder. These cylinders may be placed in a noninsulated, moisture-proof envelope.

To measure concrete strength in the girder, the Contractor shall randomly select two test cylinders. The average compressive strength of the two cylinders shall be equal or greater than the specified strength and neither cylinder shall have a compressive strength that is more than 5% below the specified strength.

If too few cylinders were molded to carry out all required tests on the girder, the Contractor shall remove and test cores from the girder under the surveillance of the Engineer. If the Contractor casts cylinders to represent more than one girder, all girders in that line shall be cored and tested. Cores shall avoid all prestressing strands, steel reinforcing bars and interior voids.

For prestressed concrete slab girders, a test shall consist of four cores measuring 3 inches in diameter by 6 inches in length (for slabs) or by the thickness of the web (for ribbed and double tee sections). Two cores shall be taken from each side of the girder with one on each side of the girder span midpoint, at locations accepted by the Engineer. The core locations for prestressed concrete ribbed and double tee sections shall be immediately beneath the top flange.

For prestressed concrete tub girders, a test shall consist of four cores measuring 3 inches in diameter by the thickness of the web. Two cores shall be taken from each web, approximately 3 feet to the left and to the right of the center of the girder span.

For all other prestressed concrete girders, a test shall consist of three cores measuring 3 inches in diameter by the thickness of the web and shall be removed from just below the top flange; one at the midpoint of the girder's length and the other two approximately 3 feet to the left and approximately 3 feet to the right.

The cores shall be taken in accordance with AASHTO T 24 and shall be tested in accordance with WSDOT FOP for AASHTO T 22. The Engineer may accept the girder if the average compressive strength of all test cores from the girder are at least 85

Provided to Builders Exchange of WA, Inc. For usage Conditions Agreement see www.bxwa.com - Always Verify Scale

percent of the specified compressive strength with no one core less than 75 percent of specified compressive strength.

If there are more than four cored holes in a girder, the prestressing reinforcement shall not be released until the holes are patched and the patch material has attained a minimum compressive strength equal to the required release compressive strength.

All cored holes shall be patched and cured prior to shipment of the girder. The girder shall not be shipped until tests show the patch material has attained a minimum compressive strength of 4,000 psi.

If the annual plant approval includes procedures for patching cored holes, the cored holes shall be patched in accordance with this procedure. Otherwise, the Contractor shall submit a core hole patching procedure as a Type 2 Working Drawing.

6-02.3(25)F Prestress Release

The second and third paragraphs are revised to read:

All strands shall be released in a way that will minimize eccentricity of the prestressing force about the centerline of the girder. This release shall not occur until tests show each girder has reached the minimum compressive strength required by the Plans.

The Contractor may request permission to release the prestressing reinforcement at a minimum concrete compressive strength less than specified in the Plans. This request shall be submitted as a Type 2E Working Drawing and shall be accompanied with calculations showing the adequacy of the proposed release concrete compressive strength and any effects on girder camber. The calculated release strength shall meet the requirements outlined in the WSDOT Bridge Design Manual LRFD (M23-50) for tension and compression at release.

6-02.3(25)G Protection of Exposed Reinforcement

The last paragraph is deleted.

6-02.3(25)H Finishing

The first sentence of the third paragraph is revised to read:

The interface on girders that contact a cast-in-place concrete deck shall have a finish of dense, screeded concrete without a smooth sheen or laitance on the surface.

The third and fourth paragraphs are revised to read:

On prestressed concrete wide flange deck girders, deck bulb tee girders, ribbed section girders and double tee girders, the Contractor shall test the top surface for flatness and make corrections in accordance with Section 6-02.3(10)D3 except that the straightedge need not exceed the width of the girder top flange when checking the transverse direction. The top surface shall be finished in accordance with Section 6-02.3(10)D6.

The Contractor may repair defects in the girder provided the repair is covered in the annual plant approval package. Any repairs that are not covered by the annual plant

Provided to Builders Exchange of WA, Inc. For usage Conditions Agreement see www.bxwa.com - Always Verify Scale

approval process shall be submitted to the Engineer as Type 2 Working Drawings or shall be submitted through the email resolution process.

6-02.3(25)I Fabrication Tolerances

This Section is revised to read:

The girders shall be fabricated as shown in the processed Shop Drawings, and shall meet the dimensional tolerances listed below. Construction tolerances of cast-in-place closures for spliced prestressed concrete girders shall conform to the tolerances specified for spliced prestressed concrete girders. Actual acceptance or rejection will depend on how the Engineer believes a defect outside these tolerances will affect the Structure's strength or appearance:

1. Length: ± ¼ inch per 25 feet of beam length, up to a maximum of ± 1½ inches.

2. Width:

   Flanges and webs: + ⅜ inch, - ¼ inch.

   Slab girders: ± ¼ inch.

3. Girder Depth (overall): ± ¼ inch.

4. Flange Depth:

   For I and wide flange I girders: ± ¼ inch

   For all other girders: + ¼ inch, - ⅛ inch

5. Strand Position:

   Straight strands: ± ¼ inch

   Bundled strand group center of gravity: ± ½ inch

   Harped strand group center of gravity at the girder ends: ± 1 inch

6. Longitudinal Location of Harp Points for Harped Strands from Design Locations: ± 20 inches

7. Position of an Interior Void, vertically and horizontally (slab girders): ± ½ inch.

8. Bearing Recess (center of recess to girder end): ± ¼ inch.

9. Girder Ends (deviation from square or designated skew):

   Horizontal: ± ½ inch

   Vertical: ± ⅛ inch per foot of girder depth

Provided to Builders Exchange of WA, Inc. For usage Conditions Agreement see www.bxwa.com - Always Verify Scale

10. Bearing Area Deviation from Plane (in length or width of bearing): 1⁄16 inch.

11. Stirrup Reinforcing Spacing: ± 1 inch.

12. Stirrup Projection from Top of Girder:

    Wide flange thin deck and slab girders: ± ¼ inch

    All other girders: ± ¾ inch

13. Mild Steel Concrete Cover: - ⅛ inch, + ⅜ inch.

14. Offset at Form Joints (deviation from a straight line extending 5 feet on each side of joint): ± ¼ inch.

15. Differential Camber Between Girders in a Span (measured in place at the job site):

For wide flange deck, wide flange thin deck, deck bulb tee and slab girders with a reinforced concrete topping:	Cambers shall be equalized when the differences in cambers between adjacent girders exceeds ± ½ inch
For all other wide flange deck, deck bulb tee and slab girders:	Cambers shall be equalized when the differences in cambers between adjacent girders exceeds ± ¼ inch
For all other prestressed concrete girders:	± ⅛ inch per 10 feet of girder length

16. Position of Inserts for Structural Connections: ± 1 inch.

17. Position of Lifting Loops: ± 3 inches longitudinal, ± ¼ inch transverse.

18. Weld Ties: ± ½ inch longitudinal, ± ⅛ inch vertical.

19. Position of post tensioning ducts in spliced prestressed concrete girders: ± ¼ inch.

20. Deviation from a smooth curve for post-tensioning ducts at closures based on the sum total of duct placement and alignment tolerances: ± ⅜ inch.

6-02.3(25)J Horizontal Alignment

This Section is revised to read:

The Contractor shall check and record the horizontal alignment of the top and bottom flanges of each girder at the following times:

1. Initial – Upon removal of the girder from the casting bed.

2. Shipment – Within 7 days prior to shipment.

Provided to Builders Exchange of WA, Inc. For usage Conditions Agreement see www.bxwa.com - Always Verify Scale

3. Erection – After girder erection and cutting temporary top strands but prior to any equalization, placement of weld ties or placement of diaphragms.

Each check shall be made by measuring the distance between each flange and a chord that extends the full length of the girder. The Contractor shall perform and record each check at a time when the alignment of the girder is not influenced by temporary differences in surface temperature. Records for the initial check (Item 1 above) shall be included in the Contractor's prestressed concrete Certificate of Compliance. Records for all other checks shall be submitted as a Type 1 Working Drawing.

Immediately after the girder is removed from the casting bed, neither flange shall be offset more than ⅛ inch for each 10 feet of girder length. During storage and prior to shipping, the offset (with girder ends plumb and upright and with no external force) shall not exceed ¼ inch per 10 feet of girder length. Any girder within this tolerance may be shipped, but shall be corrected at the job site to the ⅛ inch maximum offset per 10 feet of girder length before concrete is placed into the diaphragms.

The Engineer may permit the use of external force to correct girder alignment at the plant or job site if the Contractor provides stress calculations and a proposed procedure. If external force is permitted, it shall not be released until after the bridge deck has been placed and cured 10 days.

The maximum deviation of the side of a prestressed concrete slab girder, or the edge of the top flange of a wide flange deck, wide flange thin deck, deck bulb tee, double tee or ribbed girder, measured from a chord that extends end to end of the member, shall be ± ⅛ inch per 10 feet of member length, but not greater than ½ inch total.

6-02.3(25)K Girder Deflection

This Section, including title, is revised to read:

6-02.3(25)K Vertical Deflection

The Contractor shall check and record the vertical deflection (camber) of each girder at the following times:

1. Initial – Upon removal of the girder from the casting bed;

2. Shipment – Within 7 days prior to shipment;

3. Erection – After girder erection and cutting temporary top strands but prior to any equalization, placement of weld ties or placement of diaphragms.

At a minimum, survey data shall be taken at each girder end and at midspan. The Contractor shall perform and record each check at a time when the alignment of the girder is not influenced by temporary differences in surface temperature. Records for the initial check (Item 1 above) shall be included in the Contractor's Prestressed Concrete Certificate of Compliance. Records for all other checks shall be submitted as a Type 1 Working Drawing.

Provided to Builders Exchange of WA, Inc. For usage Conditions Agreement see www.bxwa.com - Always Verify Scale

The "D" dimensions shown in the Plans are computed upper and lower bounds of girder vertical deflections at midspan based on a time lapse of 40 and 120 days after release of the prestressing strands. Any temporary top strands are assumed to be cut 30 days prior to these elapsed times (10 and 90 days after release of the prestressing strands). The "D" dimensions are intended to advise the Contractor of the expected range of girder vertical deflection at the time of deck placement. A positive (+) "D" dimension indicates upward deflection.

If the girder vertical deflection measured for the shipment check (Item 2 above) is not between the lower bound shown in the Plans and the upper bound shown in the Plans, the Contractor shall immediately notify the Engineer and shall submit the camber data as a Type 2 Working Drawing. The Engineer shall be notified prior to shipping the girders.

If the girder vertical deflection measured for the erection check (Item 3 above) is not between the lower bound shown in the Plans and the upper bound shown in the Plans plus ¾ inches, the Contractor shall submit a Type 2 Working Drawing describing how the deficient or excess girder camber will be addressed.

All costs including bridge deck form adjustments, maintaining steel reinforcing bar clearances, changes in deck profile or thickness, or any other modifications needed to accommodate girder deflections shall be at the Contractor's expense.

6-02.3(25)L Handling and Storage

The first paragraph is revised to read:

During handling and storage, each prestressed concrete girder shall always be kept plumb and upright. It shall be lifted only by the lifting embedments (strand lift loops or high-strength threaded steel bars) at either end.

The first sentence of the third paragraph is revised to read:

For high-strength threaded steel bars, a minimum of two 1⅜-inch diameter bars conforming to Section 9-07.11 shall be used at each end of the girder.

The second sentence of the fourth paragraph is revised to read:

Alternatively, these temporary strands may be post-tensioned provided the strands are stressed on the same day that the permanent prestress is released into the girder and the strands are tensioned prior to lifting the girder from the form.

The last two paragraphs are revised to read:

The Contractor may request permission to use lifting embedments, lifting embedment locations, lifting angles, concrete release strengths, or temporary top strand configurations other than specified in the Plans. The request shall be submitted as a Type 2E Working Drawing and shall conform to the **Criteria for Girder Stresses and Stability for Handling, Shipping and Erecting** in Section 6-02.3(25)M. The request shall also address any effects on girder camber.

Provided to Builders Exchange of WA, Inc. For usage Conditions Agreement see www.bxwa.com - Always Verify Scale

If girders are to be stored, the Contractor shall place them on a stable foundation that will keep them in a vertical position. Stored girders shall be supported at the bearing recesses or, if there are no recesses, approximately 2 to 3 feet from the girder ends. After post-tensioning, spliced prestressed concrete girders shall be supported at points between 2 and 5 feet from the girder ends, unless otherwise shown in the Plans. For long-term storage of girders with initial horizontal curvature, the Contractor may wedge one side of the bottom flange, tilting the girders to control curvature. If the Contractor elects to set girders out of plumb during storage, the Contractor shall have the proposed method analyzed by the Contractor's Engineer to ensure against damaging the girder.

6-02.3(25)M Shipping

This Section is revised to read:

After the girder has reached its 28-day design strength, the girder and a completed Certification of Compliance, signed by a Precast/Prestressed Concrete Institute Certified Technician or a Professional Engineer, shall be submitted to the Engineer for inspection. If the Engineer finds the certification and the girder to be acceptable, the Engineer will stamp the girder "Approved for Shipment".

No prestressed concrete slab girder shall be shipped for at least 3 days after concrete placement. No prestressed concrete wide flange deck, deck bulb tee or tub girder shall be shipped for at least 7 days after concrete placement, except that they may be shipped 3 days after concrete placement when L/(bd) is less than or equal to 5.0, where L equals the shipping length of the girder, b equals the girder top flange width (for prestressed concrete wide flange deck and deck bulb tee girders) or the bottom flange width (for prestressed concrete tub girders), and d equals the girder depth, all in feet. No other girder shall be shipped for at least 10 days after concrete placement.

Girder support locations during shipping shall be no closer than the girder depth to the ends of the girder at the girder centerline. Support locations shown in the Plans have been determined in accordance with the criteria specified below. The Contractor shall verify the applicability of these criteria to the trucking configuration intended for transport of the girders. If the trucking configuration differs from these criteria, or the Contractor proposes to use support locations other than those shown in the Plans, the Contractor shall submit a girder shipping plan with supporting calculations conforming to the criteria specified below as a Type 2E Working Drawing.

If the Contractor elects to assemble spliced prestressed concrete girders into components of two or more segments prior to shipment, the Contractor shall submit a girder shipping plan with supporting calculations conforming to the criteria specified below as a Type 2E Working Drawing.

The Contractor shall determine if girder bracing to control lateral bending during shipping is required and shall provide it if necessary. When bracing is required, the Contractor shall submit a girder shipping plan with supporting calculations conforming to the criteria specified below as a Type 2E Working Drawing. The Contractor shall perform all bracing operations at no additional cost to the Contracting Agency.

Criteria for Girder Stresses and Stability for Handling, Shipping and Erecting: Girder stresses and lateral stability shall conform to the requirements of the WSDOT

Provided to Builders Exchange of WA, Inc. For usage Conditions Agreement see www.bxwa.com - Always Verify Scale

Bridge Design Manual LRFD (M23-50) including Sections 5.2.1.C, 5.6.2.C.2 and 5.6.3.

6-02.3(25)N Prestressed Concrete Girder Erection

This Section is revised to read:

Before erecting any prestressed concrete girders, the Contractor shall submit an erection plan as a Type 2E Working Drawing. The erection plan shall conform to the **Criteria for Girder Stresses and Stability for Handling, Shipping and Erecting** in Section 6-02.3(25)M. The erection plan shall provide complete details of the erection process including at a minimum:

1. Temporary falsework support, bracing, guys, deadmen, and attachments to other Structure components or objects;

2. Procedure and sequence of operation;

3. Girder stresses during progressive stages of erection;

4. Girder weights, lift points, lifting embedments and devices, spreaders, and angle of lifting cables in accordance with Section 6-02.3(25)L, etc.;

5. Crane(s) make and model, mass, geometry, lift capacity, outrigger size, and reactions;

6. Girder launcher or trolley details and capacity (if intended for use); and

7. Locations of cranes, barges, trucks delivering girders, and the location of cranes and outriggers relative to other Structures, including retaining walls and wing walls.

The erection plan shall include Drawings, notes, catalog cuts, and calculations clearly showing the above listed details, assumptions, and dimensions. Material properties and Specifications, structural analysis, and any other data used shall also be included.

The concrete in piers and crossbeams shall reach at least 80 percent of design strength before girders are placed on them.

The Contractor shall hoist girders only by the lifting embedments at the ends, always keeping the girders plumb and upright. When the girders are to receive a cast-in-place concrete deck, lifting embedments shall be removed after erection to provide a minimum 2½-inch clearance to the top of the deck. When the girders are not to receive a cast-in-place concrete deck, lifting embedments shall be removed 1-inch below the girder surface and grouted with an epoxy grout conforming to Section 9-26.3(1)A.

The girders shall be braced in accordance with Sections 6-02.3(17)F4 and 6-02.3(17)F5. **When temporary strands in the top flange are used, they shall be cut after the girders are braced and before the girder deflections are equalized and intermediate diaphragms are cast.**

Provided to Builders Exchange of WA, Inc. For usage Conditions Agreement see www.bxwa.com - Always Verify Scale

Instead of the oak block wedges shown in the Plans, the Contractor may use Douglas fir blocks if the grain is vertical. The height of oak block wedges at the girder centerline shall not exceed the width.

The Contractor shall fill all block-out holes with a mortar or grout acceptable to the Engineer.

For prestressed concrete slab girders, the Contractor shall set stop plates and dowel bars at the top of pier walls with either epoxy grout conforming to Section 9-26.3 or type IV epoxy bonding agent conforming to Section 9-26.1.

6-02.3(25)O Deck Bulb Tee Girder Flange Connection

This Section, including title, is revised to read:

Girder to Girder Connections

When differential camber between adjacent girders in a span exceeds the tolerance in Section 6-02.3(25)I, the Contractor shall submit a method of equalizing deflections as a Type 1 Working Drawing. Any temporary strands in the top flange shall be cut in accordance with Section 6-02.3(25)N prior to equalizing girder deflections.

Prestressed concrete wide flange deck, deck bulb tee and slab girders with grouted shear keys shall be constructed in the following sequence:

1. Deflections shall be equalized in accordance with the Contractor's equalization plan.

2. Intermediate diaphragms shall be placed and weld ties shall be welded. Welding ground shall be attached directly to the steel plates being welded when welding the weld-ties.

3. The keyways shown in the Plans to receive grout shall be filled flush with the surrounding surfaces using a grout conforming to Section 9-20.3(2).

4. Equalization equipment shall not be removed and other construction equipment shall not be placed on the Structure until intermediate diaphragms and keyway grout have attained a minimum compressive strength of 2,500 psi.

Prestressed concrete wide flange deck, deck bulb tee and slab girders without grouted shear keys and prestressed concrete wide flange thin deck girders shall be constructed in the following sequence:

1. Deflections shall be equalized in accordance with the Contractor's equalization plan.

2. Intermediate diaphragms shall be placed and any weld ties shall be welded. Welding ground shall be attached directly to the steel plates being welded when welding the weld-ties.

Provided to Builders Exchange of WA, Inc. For usage Conditions Agreement see www.bxwa.com - Always Verify Scale

3. Equalization equipment shall not be removed and other construction equipment shall not be placed on the Structure until intermediate diaphragms have attained a minimum compressive strength of 2,500 psi.

6-02.3(26)F Prestressing Reinforcement

The last sentence in the fourth paragraph is revised to read:

If the prestressing reinforcement will not be stressed and grouted for more than 7 calendar days after it is placed in the ducts, the Contractor shall place an approved corrosion inhibitor conforming to Federal Specification MIL-I-22110C in the ducts.

6-02.3(27)A Use of Self-Consolidating Concrete for Precast Units

The first paragraph is deleted.

The second paragraph (up until the colon) is revised to read:

Self-consolidating concrete (SCC) may be used for the following precast concrete Structure elements:

Item number 2 of the second paragraph is revised to read:

2. Precast reinforced concrete three-sided Structures in accordance with Section 6-02.3(29).

6-02.3(27)B Submittals for Self-Consolidating Concrete for Precast Units

This Section is revised to read:

With the exception of items 3, 7, and 8 in Section 6-02.3(27)A, the Contractor shall submit the mix design for SCC to the Engineer for annual plant approval in accordance with Section 6-02.3(28)B. The mix design submittal shall include items specified in Sections 6-02.3(2)A and 6-02.3(2)C1.

Items 3, 7, and 8 in Section 6-02.3(27)A require the precast plant to cast one representative Structure acceptable to the Engineer and have the Structure sawn in half for examination by the Contracting Agency to determine that segregation has not occurred. The Contracting Agency's approval of the sawn Structure will constitute approval of the precast plant to use SCC, and a concrete mix design submittal is not required.

6-02.3(27)C Acceptance Testing of Self-Consolidating Concrete for Precast Units

This Section's title is revised to read:

6-02.3(27)C Acceptance Testing of Concrete for Precast Units

This Section is revised to read:

Acceptance testing shall be performed by the Contractor and test results shall be submitted to the Engineer. Concrete shall conform to the requirements specified in Section 6-02.3(2)A. Unless otherwise noted below, the test methods described in

Provided to Builders Exchange of WA, Inc. For usage Conditions Agreement see www.bxwa.com - Always Verify Scale

Section 6-02.3(5)D shall be followed. Concrete compressive strength shall be in accordance with Section 6-02.3(27). Compressive strength testing shall be performed a minimum of once per day and once for every 20 cubic yards of concrete that is placed.

Concrete for items 1, 2, 4, 5, and 6 in Section 6-02.3(27)A that is not self-consolidating concrete will be accepted as follows:

1. Temperature within the allowable temperature band.

2. Slump below the maximum allowed.

3. Air content within the required range.

SCC for items 1, 2, 4, 5, and 6 in Section 6-02.3(27)A will be accepted as follows:

1. Temperature within the allowable temperature band.

2. Slump flow within the target slump flow range.

3. VSI less than or equal to 1 in accordance with ASTM C 1611, Appendix X1, using Filling Procedure B.

4. J ring passing ability less than or equal to 1.5-inches.

5. Air content within the required range.

SCC for concrete barrier will be accepted in accordance with temperature, air, and compressive strength testing listed above.

SCC for precast junction boxes, cable vaults, and pull boxes will be accepted in accordance with the temperature and compressive strength testing listed above.

SCC for precast drainage Structure elements will be accepted in accordance with the requirements of AASHTO M 199.

6-02.3(28) Precast Concrete Panels

In the first paragraph, the third sentence is revised to read:

WSDOT Certification will be granted at, and renewed during, the annual precast plant review and approval process in accordance with WSDOT Materials Manual M 46-01.04 Standard Practice QC 7.

6-02.4 Measurement

The seventh paragraph (up until the colon) is revised to read:

All reinforcing steel will be measured by the computed weight of all steel required by the Plans. The weight of mechanical splices will be based on the weight specified in the manufacturer's catalog cut for the specific item. Splices noted as optional in the Plans but installed by the Contractor will be included in the measurement. Epoxy-

Provided to Builders Exchange of WA, Inc. For usage Conditions Agreement see www.bxwa.com - Always Verify Scale

coated bars will be measured before coating. The Contractor shall furnish (without extra allowance):

Item number 1 in the seventh paragraph is revised to read:

1. Bracing, spreaders, form blocks, wire clips, and other fasteners.

The eighth paragraph is deleted.

The following three new paragraphs are inserted before the last paragraph:

Expansion joint system___seal - superstr. will be measured by the linear foot along its completed line and slope.

Expansion joint modification will be measured by the linear foot of expansion joint modified along its completed line and slope.

Prestressed concrete girder will be measured by the linear foot of girder specified in the Proposal.

6-02.5 Payment

In the paragraph following the Bid item "Commercial Concrete", per cubic yard the second sentence is revised to read:

All costs in connection with concrete curing, producing concrete surface finish with form liners, and furnishing and applying pigmented sealer to concrete surfaces as specified, shall be included in the unit Contract price per cubic yard for "Conc. Class ____".

The following new paragraph is inserted after the Bid item "Superstructure (name bridge)", lump sum:

All costs in connection with constructing, finishing and removing the bridge deck test slab as specified in Section 6-02.3(10)D1 shall be included in the lump sum Contract price for "Superstructure___" or "Bridge Deck___" for one bridge in each project, as applicable.

In the paragraph following the Bid item "Epoxy-Coated St. Reinf. Bar ___", per pound, the first sentence is revised to read:

Payment for reinforcing steel shall include the cost of drilling holes in concrete for, and setting, steel reinforcing bar dowels with epoxy bonding agent, and furnishing, fabricating, placing, and splicing the reinforcement.

The Bid item "Cure Box", lump sum and paragraph following Bid item are deleted.

The following three new Bid items are inserted before the Bid item "Bridge Approach Slab", per square yard:

"Expansion Joint System _____ - Superstr.", per linear foot.

Provided to Builders Exchange of WA, Inc. For usage Conditions Agreement see www.bxwa.com - Always Verify Scale

"Expansion Joint Modification - ___", per linear foot.

"Prestressed Conc. Girder ___", per linear foot.

Section 6-03, Steel Structures
April 6, 2015

6-03.2 Materials

The first sentence in the fifth paragraph is revised to read:

The Contractor shall submit Type 1 Working Drawings describing the methods for visibly marking the material so that it can be traced.

6-03.3 Construction Requirements

This Section is revised to read:

Structural steel fabricators of plate and box girders, floorbeams, truss members, stringers, cross frames, diaphragms, and laterals shall be certified under the AISC Certification Program for Steel Bridge Fabricators, Advanced Bridges Category. When fracture critical members are specified in the Contract, structural steel fabricators shall also meet the supplemental requirements F, Bridges with Fracture-Critical Members, under the AISC Certification Program for Steel Bridge Fabricators.

6-03.3(7) Shop Plans

This Section is revised to read:

The Contractor shall submit all Shop Detail Plans for fabricating the steel as Type 2 Working Drawings.

If these Plans will be submitted directly from the fabricator, the Contractor shall so notify the Engineer in writing.

No material shall be fabricated until: (1) the Working Drawing review is complete, and (2) the Engineer has accepted the materials source.

Before Physical Completion of the project, the Contractor shall furnish the Engineer one set of reproducible copies of the As-Built Shop Plans. The reproducible copies shall be clear, suitable for microfilming, and on permanent sheets that measure no smaller than 11 by 17-inches. Alternatively, the Shop Drawings may be provided in an electronic format with the concurrence of the Engineer.

6-03.3(7)A Erection Methods

The first paragraph is revised to read:

Before beginning to erect any steel Structure, the Contractor shall submit Type 2E Working Drawings consisting of the erection plan and procedure describing the methods the Contractor intends to use.

The second paragraph (up until the colon) is revised to read:

Provided to Builders Exchange of WA, Inc. For usage Conditions Agreement see www.bxwa.com - Always Verify Scale

The erection plan and procedure shall provide complete details of the erection process including, at a minimum, the following:

The third paragraph (up until the colon) is revised to read:

As part of the erection plan Working Drawings, the Contractor may submit details of an engineered and fabricated lifting bracket bolted to the girder top flanges providing the following requirements are satisfied:

In the third paragraph, the second sentence of item number 4 is revised to read:

Certification documentation from a previous project may be submitted;

The last sentence of the fourth paragraph is deleted.

The last paragraph is deleted.

6-03.3(10) Straightening Bent Material

In the first paragraph, the last sentence is revised to read:

A limited amount of localized heat may be applied only if carefully planned and supervised, and only in accordance with the heat-straightening procedure Working Drawing submittal.

The third paragraph is revised to read:

After straightening, the Contractor shall inspect the member for fractures using a method proposed by the Contractor and accepted by the Contracting Agency.

The last paragraph is revised to read:

The procedure for heat straightening of universal mill (UM) plates by the mill or the fabricator shall be submitted as a Type 2 Working Drawing.

6-03.3(14) Edge Finishing

In the first paragraph, the last sentence is revised to read:

Corners along exposed edges shall be broken by light grinding or another method acceptable to the Engineer to achieve an approximate 1/16-inch chamfer or rounding.

In the fifth paragraph, the last sentence is revised to read:

The fabricator shall prevent excessive hardening of flange edges through preheating, post heating, or control of the burning process as recommended by the steel manufacturer.

The sixth paragraph is revised to read:

Hardness testing shall consist of testing thermal-cut edges with a portable hardness tester. The hardness tester, and its operating test procedures, shall be submitted as

Provided to Builders Exchange of WA, Inc. For usage Conditions Agreement see www.bxwa.com - Always Verify Scale

a Type 1 Working Drawing. The hardness tester shall be convertible to Rockwell C scale values.

In the last paragraph, the last sentence is revised to read:

If thermal-cutting operations conform to procedures established by the steel manufacturer, and hardness testing results are consistently within acceptable limits, the Engineer may authorize a reduction in the testing frequency.

6-03.3(15) Planing of Bearing Surfaces

This Section is supplemented with the following new paragraph:

Where mill to bear is specified in the Plans, the bearing end of the stiffener shall be flush and square with the flange and shall have at least 75 percent of this area in contact with the flange.

6-03.3(25) Welding and Repair Welding

In the first paragraph, the first sentence is revised to read:

Welding and repair welding of all steel bridges shall comply with the AASHTO/AWS D1.5M/D1.5, latest edition, Bridge Welding Code.

In the second paragraph, the last sentence is revised to read:

No welding, including tack and temporary welds shall be done in the shop or field unless the location of the welds is shown on the Shop Drawings reviewed and accepted by the Engineer.

In the third paragraph, the first sentence is revised to read:

Welding procedures shall accompany the Shop Drawing Working Drawing submittal.

In the fourth paragraph, the first sentence is revised to read:

Welding shall not begin until completion of the Shop Plan Working Drawing review as required in Section 6-03.3(7).

In item number 1 of the ninth paragraph, “approves” is revised to read “concurs”.

6-03.3(25)A3 Ultrasonic Inspection

The following new paragraph is inserted before the last paragraph:

A minimum of 30 percent of complete penetration vertical welds on steel column jackets thicker than 5/16-inch, within 1.50 column jacket diameter of the top and bottom of each column, shall be inspected. If any rejectable flaws are found, 100 percent of the weld within the specified limits shall be inspected. The largest column cross section diameter for tapered column jackets shall constitute one column jacket diameter.

Provided to Builders Exchange of WA, Inc. For usage Conditions Agreement see www.bxwa.com - Always Verify Scale

6-03.3(25)A4 Magnetic Particle Inspection

Items number 3 and 4 are revised to read:

3. Complete penetration groove welds on plates 5/16-inch or thinner (excluding steel column jackets) shall be 100 percent tested by the magnetic particle method. Testing shall apply to both sides of the weld, if backing plate is not used. The ends of each complete penetration groove weld at plate edges shall be tested by the magnetic particle method.

4. A minimum of 30 percent of complete penetration vertical welds on steel column jackets 5/16-inch or thinner, within 1.50 column jacket diameters of the top and bottom of each column, shall be magnetic particle inspected. The largest column cross section diameter for tapered column jackets shall constitute one column jacket diameter.

The last paragraph is supplemented with the following new sentence:

If any rejectable flaws are found in any test length of item 4 above, 100 percent of the weld within the specified limits shall be inspected.

6-03.3(27) High Strength Bolt Holes

The last paragraph is revised to read:

The Contractor shall submit Type 2 Working Drawings consisting of a detailed outline of the procedures proposed to accomplish the work from initial drilling through shop assembly.

6-03.3(27)C Numerically Controlled Drilled Connections

In the second paragraph, the first sentence is revised to read:

The Contractor shall submit Type 1 Working Drawings consisting of a detailed outline of proposed N/C procedures.

6-03.3(29) Welded Shear Connectors

This Section's content is deleted and replaced with the following:

Installation, production control, and inspection of welded shear connectors shall conform to Chapter 7 of the AASHTO/AWS D1.5M/D1.5:2010 Bridge Welding Code. If welded shear connectors are installed in the shop, installation shall be completed prior to applying the shop primer coat in accordance with Section 6-07.3(9)G. If welded shear connectors are installed in the field, the steel surface to be welded shall be prepared to SSPC-SP 11, power tool cleaning, just prior to welding.

6-03.3(33) Bolted Connections

In the second paragraph, the first sentence is revised to read:

The Contractor shall submit Type 1 Working Drawings providing documentation of the bolt tension calibrator, including brand, capacity, model, date of last calibration, and manufacturer's instructions for use.

Provided to Builders Exchange of WA, Inc. For usage Conditions Agreement see www.bxwa.com - Always Verify Scale

In the second sentence of the second paragraph, the word "approved" is deleted.

In item number 3 of the fifth paragraph, "approved" is revised to read "specified".

In the center column header of table 1, "AASHTO M 164" is revised to read "ASTM A 325".

In the column headings of table 3, "M 164" is revised to read "A 325".

In the tenth paragraph, item number 3, "approved" is revised to read "accepted" in the second and third sentences of the first paragraph.

In the tenth paragraph, item number 3, the third paragraph is revised to read:

> The Contractor shall submit Type 1 Working Drawings of the tension control bolt assembly, including bolt capacities, type of bolt, nut, and washer lubricant, method of packaging and protection of the lubricated bolt, installation equipment, calibration equipment, and installation procedures.

In the first sentence of the last paragraph, "AASHTO M 164" is revised to read "ASTM A 325".

The second sentence of the last paragraph is revised to read:

> Black ASTM A 325 bolts may be reused once if accepted by the Engineer.

In the last paragraph, the fourth sentence is revised to read:

> Bolts to be reused shall be relubricated in accordance with the manufacturer's recommendations.

6-03.3(33)A Pre-Erection Testing

In the fifth sentence of the first paragraph, "approved" is revised to read "accepted".

The third paragraph is revised to read:

> The Contractor shall submit Type 1 Working Drawings consisting of the manufacturer's detailed procedure for pre-erection (rotational capacity) testing of tension control bolt assemblies.

6-03.3(33)B Bolting Inspection

In the last sentence of the first paragraph, "approved" is revised to read "specified".

The last paragraph is revised to read:

> The Contractor shall submit Type 1 Working Drawings consisting of the manufacturer's detailed procedure for routine observation to ensure proper use of the tension control bolt assemblies.

6-03.3(42) Surface Condition

The first subparagraph is revised to read:

Provided to Builders Exchange of WA, Inc. For usage Conditions Agreement see www.bxwa.com - Always Verify Scale

Painted steel surfaces shall be cleaned by methods required for the type of staining. The Contractor shall submit a Type 1 Working Drawing of the cleaning method.

Section 6-04, Timber Structures
January 5, 2015

6-04.3(3) Shop Details
This Section is revised to read:

The Contractor shall submit Type 2 Working Drawings consisting of shop detail Plans for all treated timber. These Plans shall show dimensions for all cut, framed, or bored timbers.

Section 6-05, Piling
January 5, 2015

6-05.3(2) Ordering Piling
The last paragraph is deleted.

6-05.3(3)A Casting and Stressing
In the second sentence of the first paragraph, "poured" is revised to read "cast".

6-05.3(4) Manufacture of Steel Casings for Cast-In-Place Concrete Piles
This Section is revised to read:

The diameter of steel casings shall be as specified in the Contract. A full-penetration groove weld between welded edges is required.

6-05.3(5) Manufacture of Steel Piles
This Section is revised to read:

Steel piles shall be made of rolled steel H-pile sections, steel pipe piles, or of other structural steel sections described in the Contract. A full-penetration groove weld between welded edges is required.

6-05.3(6) Splicing Steel Casings and Steel Piles
This Section is revised to read:

The Engineer will normally permit steel piles and steel casings for cast-in-place concrete piles to be spliced. But in each case, the Contractor shall submit Type 2 Working Drawings supporting the need and describing the method for splicing. Welded splices shall be spaced at a minimum distance of 10 feet. Only welded splices will be permitted.

Splice welds for steel piles shall comply with Section 6-03.3(25) and AWS D1.1/D1.1M, latest edition, Structural Welding Code. Splicing of steel piles shall be performed in accordance with an approved weld procedure. The Contractor shall submit a Type 2 Working Drawing consisting of the weld procedure. For ASTM A 252 material, mill certification for each lot of pipe to be welded shall accompany the

Provided to Builders Exchange of WA, Inc. For usage Conditions Agreement see www.bxwa.com - Always Verify Scale

submittal. The ends of all steel pipe piling shall meet the fit-up requirements of AWS D1.1/D1.1M, latest edition, Structural Welding Code Section 5.22.3.1, "Girth Weld Alignment (Tubular)," when the material is spliced utilizing a girth weld.

Splice welds of steel casings for cast-in-place concrete piles shall be the Contractor's responsibility and shall be welded in accordance with AWS D1.1/D1.1M, latest edition, Structural Welding Code. A weld procedure submittal is not required for steel casings used for cast-in-place concrete piles. Casings that collapse or are not watertight, shall be replaced at the Contractor's expense.

6-05.3(7)B Precast Concrete Piles

The second to last sentence of the second paragraph is revised to read:

The Contractor shall submit Type 2 Working Drawings consisting of the method of lifting the piles.

6-05.3(8) Pile Tips and Shoes

In the last paragraph, the second and third sentences are deleted and replaced with the following new sentence:

If pile tips or shoes other than those denoted in the Qualified Products List are proposed, the Contractor shall submit Type 2 Working Drawings consisting of Shop Drawings of the proposed pile tip along with design calculations, Specifications, material chemistry and installation requirements, along with evidence of a pile driving test demonstrating suitability of the proposed pile tip.

6-05.3(9)A Pile Driving Equipment Approval

In the first paragraph, the first sentence is revised to read:

Prior to driving any piles, the Contractor shall submit Type 2 Working Drawings consisting of details of each proposed pile driving system.

In the second paragraph, the first sentence is revised to read:

The Contractor shall submit Type 2E Working Drawings consisting of a wave equation analysis for all pile driving systems used to drive piling with required ultimate bearing capacities of greater than 300 tons.

In the second paragraph, the second sentence is deleted.

The last paragraph is revised to read:

Changes to the pile driving system after completion of the Working Drawing review require a revised Working Drawing submittal.

6-05.3(9)B Pile Driving Equipment Minimum Requirements

In the first paragraph, the first sentence is revised to read:

For each drop hammer used, the Contractor shall weigh it in the Engineer's presence or submit a Type 1 Working Drawing consisting of a certificate of its weight.

Provided to Builders Exchange of WA, Inc. For usage Conditions Agreement see www.bxwa.com - Always Verify Scale

In the third paragraph, the first sentence is revised to read:

> For each diesel, hydraulic, steam, or air-driven hammer used, the Contractor shall submit a Type 1 Working Drawing consisting of the manufacturer's Specifications and catalog.

In the fourth paragraph, "approval" is revised to read "permission".

The ninth paragraph is revised to read:

> These requirements for minimum hammer size may be waived if a Type 2E Working Drawing is submitted consisting of a wave equation analysis demonstrating the ability of the hammer to obtain the required bearing capacity and minimum tip elevation without damage to the pile.

6-05.3(9)C Pile Driving Leads

In the third paragraph, "approved" is revised to read "permitted".

6-05.3(11)F Pile Damage

In the first sentence of the second paragraph, "approved" is revised to read "accepted".

6-05.3(11)G Pile Cutoff

In the first paragraph, "Engineer's approval" is revised to read "Engineer's permission".

6-05.3(11)H Pile Driving From or Near Adjacent Structures

In the first paragraph, item number 3 is revised to read:

3. Type 2E Working Drawings are submitted in accordance with Sections 1-05.3 and 6-02.3(16), showing the structural adequacy of the existing Structure to safely support all of the construction loads.

6-05.3(12) Determination of Bearing Values

In the footnote below the formula, "approved by the Engineer" is revised to read "acceptable to the Engineer".

6-05.3(13) Treatment of Timber Pile Heads

In the second paragraph, the first sentence is revised to read:

> After cutting treated timber piles to correct elevation, the Contractor shall brush three coats of a preservative that meets the requirements of Section 9-09 on all pile heads (except those to be covered with concrete footings or concrete caps).

6-05.3(15) Completion of Cast-In-Place Concrete Piles

In the first paragraph, "approval" is revised to read "acceptance".

Provided to Builders Exchange of WA, Inc. For usage Conditions Agreement see www.bxwa.com - Always Verify Scale

Section 6-06, Bridge Railings
January 5, 2015

6-06.3(2) Metal Railings

The second paragraph is revised to read:

Before fabricating the railing, the Contractor shall submit Type 2 Working Drawings consisting of the shop Plans. The Contractor may substitute other rail connection details for those shown in the Plans if details of these changes show in the shop Plans and if the Engineer accepts them in the Working Drawing response comments. In reviewing the shop Plan Working Drawings, the Engineer indicates only that they are adequate and complete enough. The review does not indicate a check on dimensions.

Section 6-07, Painting
January 5, 2015

6-07.3 Painting

This Section is supplemented with the following new subsections:

6-07.3(14) Metallic Coatings

6-07.3(14)A General Requirements

This Specification covers the requirements for thermal spray metallic coatings, with and without additional paint coats, as a means to prevent corrosion.

The coating system consists of surface preparation by wash cleaning and abrasive blast cleaning, thermal spray application of a metallic coating using a material made specifically for that purpose, and, when specified, shop primer coat or shop primer coat plus top coat in accordance with Section 6-07.3(11)A. The system also includes inspection and acceptance requirements.

6-07.3(14)B Reference Standards

SSPC-SP 10/NACE No. 2	Near White Blast Cleaning
SSPC CS 23.00	Guide for Thermal Spray Metallic Coating Systems
ASTM-C-633	Standard Test Method for Adhesion or Cohesion Strength of Thermal Spray Coatings
ASTM D 4417	Standard Test Methods for Field Measurement of Surface Profile of Blast-Cleaned Steel
ASTM D 6386	Standard Practice for Preparation of Zinc (Hot-Dip Galvanized) Coated Iron and Steel Product and Hardware Surfaces for Painting
ASTM D 4541	Standard Test Method for Pull-Off Strength of Coatings Using Portable Adhesion Testers
ANSI/AWS C2.18	Guide for the Protection of Steel with Thermal Sprayed Coatings of Aluminum, Zinc and their Alloys and Composites

Provided to Builders Exchange of WA, Inc. For usage Conditions Agreement see www.bxwa.com - Always Verify Scale

6-07.3(14)C Quality Assurance

A representative sample of each lot of the coating material used shall be submitted to the Engineer for analysis prior to use. Zinc shall have a minimum purity of 99.9 percent. Zinc Aluminum 85/15 wire shall be 14 percent minimum to 16 percent maximum aluminum.

The thermal sprayed coating shall have a uniform appearance. The coating shall not contain any blisters, cracks, chips or loosely adhering particles, oil or other surface contaminants, nodules, or pits exposing the substrate.

The thermal spray coating shall adhere to the substrate with a minimum bond of 700 psi. The Contractor's QA program shall include thermal spray coating bond testing.

The Engineer may cut through the coating with a knife or chisel. If upon doing so, any part of the coating lifts away from the base metal 1/4 in. or more ahead of the cutting blade without cutting the metal, then the bond is considered not effective and is rejected.

Coated areas which have been rejected or damaged in the inspection procedure described shall have the defective sections blast cleaned to remove all of the thermal sprayed coating and shall then be recoated. Before resubmittal and inspection, those sections where coating has not reached the required thickness shall be sprayed with additional metal until that thickness is achieved.

6-07.3(14)D Submittals

The Contractor shall submit to the Engineer, prior to abrasive blast cleaning, a 12 inch square steel plate, of the same material and approximate thickness of the steel to be coated, blasted clean in accordance with Section 6-07.3(14)E. The sample plate will be checked for specified angular surface pattern, the abrasive grit size and type used, and the procedure used. This plate shall be used as the visual standard to determine the acceptability of the cleaned surface. In the event the Contractor's cleaning operation is inferior to the sample plate, the Contractor shall be required to correct the cleaning operation to do a job comparable to the specimen submitted.

At the same time as submitting the abrasive blast cleaned steel plate sample, the Contractor shall submit to the Engineer, a second 12 inch square steel plate of the same material and thickness, cleaned and thermal spray coated in accordance with the same processes and with the same equipment as intended for use in applying the thermal spray coatings. The Engineer may request additional cleaned and thermal spray coated samples to be produced and submitted coincident with thermal spray coating of the items specified in the Plans to receive thermal spray coatings.

6-07.3(14)E Surface Preparation

Surface irregularities (e.g., sharp edges and/or carburized edges, cracks, delaminations, pits, etc.) interfering with the application of the coating shall be removed or repaired, prior to wash cleaning. Thermal cut edges shall be ground

Provided to Builders Exchange of WA, Inc. For usage Conditions Agreement see www.bxwa.com - Always Verify Scale

to reduce hardness to attain the surface profile required from abrasive blast cleaning.

All dirt, oil, scaling, etc. shall be removed prior to blast cleaning. All surfaces shall be wash-cleaned with either clean water at 8000 psi or water and detergent at 2000 psi with two rinses with clean water.

The surface shall be abrasive blast cleaned to near white metal (SSPC-SP 10). The surface profile shall be measured using a surface profile comparator, replica tape, or other method suitable for the abrasive being used in accordance with ASTM D 4417.

Where zinc coatings up to and including 0.009 inch thick are to be applied, one of the following abrasive grits shall be used with pressure blast equipment to produce a 3.0 mils AA anchor tooth pattern:

1. Aluminum oxide or silicon carbide
   mesh size: SAE G-25 to SAE G-40

2. Hardened steel grit
   mesh size: SAE G-25 to SAE G-40

3. Garnet, flint, or crushed nickel or black beauty coal slag
   mesh size: SAE G-25 to SAE G-50

Where zinc coatings greater than 0.010 inch thick are to be applied, one of the following abrasive grits shall be used with pressure blast equipment to produce a 5.0 mils AA anchor tooth pattern:

1. Aluminum oxide or silicon carbide
   mesh size: SAE G-18 to SAE G-25

2. Hardened steel grit
   mesh size: SAE G-18 to SAE G-25

3. Garnet, flint, or crushed nickel or black beauty coal slag
   mesh size: SAE G-18 to SAE G-25

The pressure of the blast nozzle, as measured with a needle probe gauge, with pressure type blasting equipment shall be as follows:

1. With aluminum oxide, silicon carbide, flint, or slag - 50 psi minimum and 60 psi maximum.

2. With garnet or steel grit - 75 psi minimum.

The pressure at the blast nozzle, with siphon blasting (suction blasting), shall be as follows:

1. With aluminum oxide, silicon carbide, flint, or slag - 75 psi maximum.

Provided to Builders Exchange of WA, Inc. For usage Conditions Agreement see www.bxwa.com - Always Verify Scale

2. With garnet or steel grit - 90 psi maximum.

The abrasive blast stream shall be directed onto the substrate surface at a spray angle of 75 to 90 degrees, and moved side to side. The nozzle to substrate distance shall be 4 to 12 inches.

6-07.3(14)F Application of Metallic Coating

No surface shall be sprayed which shows any sign of condensed moisture or which does not comply with Section 6-07.3(14)E. If rust bloom occurs within the holding time between abrasive blast cleaning and thermal spraying, the surface shall be reblasted at a blast angle as close to perpendicular to the surface as possible to achieve a 2.0 to 4.0 mil anchor tooth pattern. Thermal spraying shall not take place when the relative humidity is 90% or greater, when the steel temperature is less than 5°F above the dew point, or when the air or steel temperature is less than 40°F.

Clean, dry air shall be used with not less than 50 psi air pressure at the air regulator. Not more than 50 feet of 3/8 in. ID hose shall be used between the air regulator and the metallizing gun. The metallizing gun shall be started and adjusted with the spray directed away from the Work. During the spraying operation and depending upon the equipment being used, the gun shall be held as close to perpendicular as possible to the surface from 5 to 8 inches from the surface of the Work.

Manual spraying shall be done in a block pattern, typically 2 feet by 2 feet square. The sprayed metal shall overlap on each pass to ensure uniform coverage. The specified thickness of the coating shall be applied in multiple layers. In no case are fewer than two passes of thermal spraying, overlapping at right angles, acceptable.

At least one single layer of coating shall be applied within 4 hours of blasting and the surface shall be completely coated to the specified thickness within 8 hours of blasting.

The minimum coating thickness shall be 6 mils unless otherwise shown in the Plans.

6-07.3(14)G Applications of Shop Coats and Field Coats

The surface shall be wiped clean with solvent immediately before applying the wash primer. The wash primer shall have a low viscosity appropriate for absorption into the thermal spray coating, and shall be applied within 8 hours after completion of thermal spraying or before oxidation occurs. The dry film thickness of the wash primer shall not exceed 0.5 mils or be less than 0.3 mils. It shall be applied using an appropriate spray gun except in those areas where brush or roller application is necessary. The subsequent shop primer or field coats shall be applied no less than one-half hour after a wash primer.

The shop primer coat, when specified, shall be applied in accordance with Section 6-07.3(11)A and the paint manufacturer's recommendations.

Provided to Builders Exchange of WA, Inc. For usage Conditions Agreement see www.bxwa.com - Always Verify Scale

All field coats, when specified, shall be applied in accordance with Section 6-07.3(11)A and the paint manufacturer's recommendations. The color of the top coat shall conform to Section 6-03.3(30) as supplemented in these Special Provisions.

6-07.3(2) Submittals

The first paragraph is revised to read:

The Contractor shall submit Type 2 Working Drawings of the Painting Plan.

6-07.3(10)A Containment

The second paragraph is revised to read:

The containment length shall not exceed the length of a span (defined as pier to pier). The containment system shall not cause any damage to the existing Structure. All clamps and other attachment devices shall be padded or designed such that they shall not mark or otherwise damage the steel member to which they are attached. All clamps and other attachment devices shall be fully described in the Contractor's Painting Plan Working Drawing submittal. Field welding of attachments to the existing Structure will not be allowed. The Contractor shall not drill holes into the existing Structure or through existing structural members except as shown in the Contractor's Painting Plan Working Drawing submittal. All provisions for dust collection, ventilation and auxiliary lighting within the containment system shall be fully described the Contractor's Painting Plan Working Drawing submittal.

In the second to last paragraph, “approved” is revised to read “accepted”.

6-07.3(10)E Surface Preparation – Full Paint Removal

This Section is revised to read:

For Structures where full removal of existing paint is specified, the Contractor shall remove any visible oil, grease, and road tar in accordance with SSPC-SP 1.

Following preparation by SSPC-SP 1, all steel surfaces to be painted shall be prepared in accordance with SSPC-SP 10, near-white metal blast cleaning. Surfaces inaccessible to near-white metal blast cleaning shall be prepared in accordance with SSPC-SP 11, power tool cleaning to bare metal, as allowed by the Engineer.

6-07.3(10)F Collecting, Testing and Disposal of Containment Waste

In the first paragraph, the last sentence before the numbered list is revised (up until the colon) to read:

The sealed waste containers shall be stored in accordance with Section 1-06.4, the Painting Plan, and the following requirements:

In the second paragraph, the first sentence is revised to read:

All material collected by and removed from the containment system shall be taken to a landside staging area, provided by the Contractor, for further processing and storage prior to transporting for disposal.

Provided to Builders Exchange of WA, Inc. For usage Conditions Agreement see www.bxwa.com - Always Verify Scale

The ninth paragraph is revised to read:

The Contractor shall submit a Type 1 Working Drawing of all TCLP results.

The first sentence of the last paragraph is revised to read:

The Contractor shall submit a Type 1 Working Drawing consisting of waste disposal documentation within 15 working days of each disposal.

6-07.3(10)K Coating Thickness

The last paragraph is revised to read:

If the specified number of coats does not produce a combined dry film thickness of at least the sum of the thicknesses required per coat, or if an individual coat does not meet the minimum thickness, or if visual inspection shows incomplete coverage, the coating system will be rejected, and the Contractor shall discontinue painting and surface preparation operations and shall submit a Type 2 Working Drawing of the repair proposal. The repair proposal shall include documentation demonstrating the cause of the less than minimum thickness along with physical test results, as necessary, and modifications to Work methods to prevent similar results. The Contractor shall not resume painting or surface preparation operations until receiving the Engineer's acceptance of the completed repair.

6-07.3(10)L Environmental Condition Requirements Prior to Application of Paint

In the last paragraph, the second to last sentence is revised to read:

If a paint system manufacturer's recommendations allow for application of a paint under environmental conditions other than those specified, the Contractor shall submit a Type 2 Working Drawing consisting of a letter from the paint manufacturer specifying the environmental conditions under which the paint can be applied.

In the last sentence of the last paragraph, "approval" is revised to read "concurrence".

6-07.3(11)B1 Submittals

The first paragraph (up until the colon) is revised to read:

The Contractor shall submit Type 2 Working Drawings consisting of the following information:

6-07.3(11)B3 Galvanized Surface Cleaning and Preparation

The first paragraph is revised to read:

Galvanized surfaces receiving the powder coating shall be cleaned and prepared for coating in accordance with ASTM D 6386, and the project-specific Powder Coating Plan.

6-07.3(11)B4 Powder Coating Application and Curing

The first paragraph (up until the colon) is revised to read:

Provided to Builders Exchange of WA, Inc. For usage Conditions Agreement see www.bxwa.com - Always Verify Scale

After surface preparation, the two-component powder coating shall be applied in accordance with the powder coating manufacturer's recommendations, the project-specific Powder Coating Plan, and as follows:

6-07.3(11)B5 Testing

In the fifth sentence of the first paragraph, the phrase "as approved by the Engineer" is deleted.

The second paragraph is revised to read:

The results of the QC testing shall be documented in a QC report, and submitted as a Type 2 Working Drawing.

In the fourth paragraph, the phrase "as approved by the Engineer" is deleted.

In the last paragraph, "Engineer's approval" is revised to read "Engineer's acceptance".

6-07.3(11)B6 Coating Protection for Shipping

The phrase "as approved by the Engineer" is deleted from this Section.

The first sentence of the last paragraph is revised to read:

After erection, all coating damage due to the Contractor's shipping, storage, handling, and erection operations shall be repaired by the Contractor in accordance with the project-specific Powder Coating Plan.

6-07.5 Payment

The following new paragraph is inserted before the last paragraph:

All costs in connection with producing the metallic coatings as specified shall be included in the unit Contract price for the applicable item or items of Work.

Section 6-09, Modified Concrete Overlays
January 5, 2015

6-09.2 Materials

The second sentence of the fifth paragraph is revised to read:

Microsilica will be accepted based on submittal of a Manufacturer's Certificate of Compliance.

The seventh paragraph is revised to read:

Latex admixture will be accepted based on submittal of a Manufacturer's Certificate of Compliance.

6-09.3(1)H Mobile Mixer for Latex Modified Concrete

In item number 2 of the first paragraph, "An approved recording meter" is revised to read "A recording meter".

Provided to Builders Exchange of WA, Inc. For usage Conditions Agreement see www.bxwa.com - Always Verify Scale

In item number 3 of the first paragraph, "an approved flow meter" is revised to read "a flow meter".

6-09.3(1)J Finishing Machine

The last two sentences of the last paragraph are revised to read:

A machine with a vibrating pan as an integral part may be proposed. Other finishing machines will be allowed subject to concurrence of the Engineer.

6-09.3(2) Submittals

This Section is revised to read:

The Contractor shall submit the following Working Drawings in accordance with Section 1-05.3:

1. A Type 1 Working Drawing of the type of machine (rotary milling, hydro-demolition, or shot blasting) selected by the Contractor for use in this project to scarify concrete surfaces.

2. A Type 1 Working Drawing of the axle loads and axle spacing of the rotary milling machine (if used).

3. A Type 2 Working Drawing of the Runoff Water Disposal Plan (if a hydro-demolition machine is used). The Runoff Water Disposal Plan shall describe all provisions for the containment, collection, filtering, and disposal of all runoff water and associated contaminants generated by the hydro-demolition process, including containment, collection and disposal of runoff water and debris escaping through breaks in the bridge deck.

4. A Type 2 Working Drawing of the method and materials used to contain, collect, and dispose of all concrete debris generated by the scarifying process, including provisions for protecting adjacent traffic from flying debris.

5. A Type 1 Working Drawing of the mix design for concrete Class M, and either fly ash modified concrete, microsilica modified concrete, or latex modified concrete, as selected by the Contractor for use in this project in accordance with Section 6-09.3(3).

6. A Type 1 Working Drawing of samples of the latex admixture and the Portland cement for testing and compatibility (if latex modified concrete is used).

Provided to Builders Exchange of WA, Inc. For usage Conditions Agreement see www.bxwa.com - Always Verify Scale

7. A Type 2 Working Drawing of the paving equipment Specifications and details of the screed rail support system, including details of anchoring the rails and providing rail continuity.

6-09.3(3)A General

In the last paragraph, the phrase "and as approved by the Engineer" is deleted.

6-09.3(4)B Latex Admixture

In the second sentence of the second paragraph, the phrase "and as approved by the Engineer" is deleted.

6-09.3(5)A General

The second paragraph is deleted.

In the third and fourth paragraphs, the phrase "and as approved by the Engineer" is deleted.

In the fifth paragraph, "approved by the Engineer" is revised to read "acceptable to the Engineer".

6-09.3(5)B Testing of Hydro-Demolition and Shot Blasting Machines

In the last sentence of the last paragraph, "approval" is revised to read "acceptance".

6-09.3(5)C Hydro-Demolishing

In the third and fourth paragraphs, the phrase "as approved by the Engineer" is deleted.

6-09.3(6)B Deck Repair Preparation

The second to last paragraph is revised to read the following three new paragraphs:

The exposed steel reinforcing bars and concrete in the repair area shall be sandblasted or hydro-blasted and blown clean just prior to placing concrete.

Where existing steel reinforcing bars inside deck repair areas show deterioration exceeding the limits defined in the Plans, the Contractor shall furnish and place steel reinforcing bars alongside the deteriorated bars in accordance with the details shown in the Plans. Payment for such extra Work will be by force account as provided in Section 1-09.6.

Bridge deck areas outside the repair area or steel reinforcing bar inside or outside the repair area damaged by the Contractor's operations, shall be repaired by the Contractor at no additional expense to the Contracting Agency, and to the satisfaction of the Engineer.

6-09.3(6)C Placing Deck Repair Concrete

The third paragraph is supplemented with the following:

The Work of Type 1 further deck preparation shall consist of removing and disposing of the concrete within the repair area.

The following new sentence is inserted before the last sentence of the last paragraph:

Provided to Builders Exchange of WA, Inc. For usage Conditions Agreement see www.bxwa.com - Always Verify Scale

The Work of Type 2 further deck preparation shall consist of removing and disposing of concrete within the repair area, and furnishing, placing, finishing, and curing the repair concrete.

6-09.3(7) Surface Preparation for Concrete Overlay

The first sentence of the second paragraph is revised to read:

If either a rotary milling machine or a shot blasting machine is used for concrete scarification, then the concrete deck shall be sandblasted or shot blasted, using equipment identified in the Working Drawing submittals, until sound concrete is exposed.

The third paragraph is revised to read:

If a hydro-demolition machine is used for concrete scarification, then the concrete deck shall be cleaned by water blasting with 7,000 psi minimum pressure, until sound concrete is exposed.

In the fourth paragraph, "as approved by the Engineer" is revised to read "accepted by the Engineer".

In the last sentence of the eighth paragraph, the phrase "as approved by the Engineer" is deleted.

In the first sentence of the last paragraph, "approved" is revised to read "allowed".

6-09.3(8)B Quality Assurance for Latex Modified Concrete Overlays

The second sentence of the last paragraph is revised to read:

The technical representative shall be capable of performing, demonstrating, inspecting, and testing all of the functions required for placement of the latex modified concrete as specified in Section 6-09.3(11).

The fourth sentence of the last paragraph is revised to read:

Recommendations made by the technical representative on or off the jobsite shall be adhered to by the Contractor at no additional expense to the Contracting Agency.

6-09.3(10)A Survey of Existing Bridge Deck Prior to Scarification

The third sentence of the fourth paragraph is revised to read:

A Type 1 Working Drawing of each day's survey record shall be provided to the Engineer within three working days after the end of the shift.

6-09.3(10)B Establishing Finish Overlay Profile

In the fourth sentence of the first paragraph, "approved by the Engineer" is revised to read "specified by the Engineer".

In the second paragraph, the phrase "and as approved by the Engineer" is deleted.

Provided to Builders Exchange of WA, Inc. For usage Conditions Agreement see www.bxwa.com - Always Verify Scale

6-09.3(11) Placing Concrete Overlay

In the fourth paragraph, the last sentence of item number 3 is revised to read:

> If the Contractor elects to Work at night to meet these criteria, adequate lighting shall be provided at no additional expense to the Contracting Agency.

6-09.4 Measurement

The last paragraph is deleted and replaced with the following:

> Further deck preparation for Type 1 deck repair and for Type 2 deck repair will be measured by the square foot of surface area of deck concrete removed in accordance with Section 6-09.3(6).

6-09.5 Payment

The Bid item "Further Deck Preparation", per cubic foot and the paragraph following this Bid item are deleted and replaced with the following two new Bid items:

> "Further Deck Preparation for Type 1 Deck Repair", per square foot.
>
> "Further Deck Preparation for Type 2 Deck Repair", per square foot.

The Bid item "Further Deck Preparation", force account and the paragraph following this Bid item are deleted.

Section 6-10, Concrete Barrier
January 5, 2015

6-10.1 Description

In the second paragraph, "approved" is revised to read "specified".

6-10.3 Construction Requirements

In the first paragraph, "approved" is revised to read "specified".

6-10.3(5) Temporary Concrete Barrier

The last sentence of the first paragraph is deleted.

The second paragraph is revised to read:

> If the Contract calls for the removal and resetting of permanent barrier, and the permanent barrier is not required to remain in place until reset, the permanent barrier may be substituted for temporary concrete barrier. Any of the permanent barrier damaged during its use as temporary barrier will become the property of the Contractor and be replaced with permanent barrier when the permanent barrier is reset to its permanent location.

The third paragraph is revised to read:

> All barrier shall be in good condition, without cracks, chips, spalls, dirt, or traffic marks. If any barrier segment is damaged during or after placement, the Contractor shall

Provided to Builders Exchange of WA, Inc. For usage Conditions Agreement see www.bxwa.com - Always Verify Scale

immediately repair it to the Engineer's satisfaction or replace it with an undamaged section.

The following new paragraph is inserted after the third paragraph:

Delineators shall be placed on the traffic face of the barrier 6 inches from the top and spaced a maximum of 40 feet on tangents and 20 feet through curves. The reflector color shall be white on the right side of traffic and yellow on the left side of traffic. The Contractor shall maintain, replace and clean the delineators when ordered by the Engineer.

Section 6-11, Reinforced Concrete Walls
January 5, 2015

6-11.3(1) Submittals

The first paragraph is revised to read:

The Contractor shall submit Type 2E Working Drawings consisting of Excavation Shoring Plans in accordance with Section 2-09.3(3)D.

The second paragraph is revised to read:

The Contractor shall submit Type 2E Working Drawings of Falsework and Formwork Plans in accordance with Sections 6-02.3(16) and 6-02.3(17).

The third paragraph (up until the colon) is revised to read:

If the Contractor elects to fabricate and erect precast concrete wall stem panels, Type 2E Working Drawings of the following information shall be submitted in accordance with Section 6-02.3(28)A:

The last paragraph is deleted.

6-11.3(3) Precast Concrete Wall Stem Panels

In the third paragraph, the phrase "as approved by the Engineer" is deleted.

Section 6-12, Noise Barrier Walls
January 5, 2015

6-12.3(1) Submittals

In the first paragraph, the second sentence is revised to read:

The Contractor shall submit a Type 2 Working Drawing consisting of the Noise Barrier Wall Access Plan.

The second paragraph (up until the colon) is revised to read:

For construction of all noise barrier walls with shafts, the Contractor shall submit a Type 2 Working Drawing consisting of the Shaft Construction Plan, including at a minimum the following information:

Provided to Builders Exchange of WA, Inc. For usage Conditions Agreement see www.bxwa.com - Always Verify Scale

In the third paragraph, the first sentence is revised to read:

> For construction of precast concrete noise barrier walls, the Contractor shall submit Type 2 Working Drawings consisting of Shop Drawings for the precast concrete panels in accordance with Section 6-02.3(28)A.

6-12.3(2) Work Access and Site Preparation

In the first paragraph, the first sentence is revised to read:

> The Contractor shall construct Work access in accordance with the Work Access Plan.

6-12.3(3) Shaft Construction

The first paragraph is revised to read:

> The Contractor shall excavate and construct the shafts in accordance with the Shaft Construction Plan.

In the last sentence of the third paragraph, "approved by the Engineer" is revised to read "acceptable to the Engineer".

The fourth paragraph is revised to read:

> When caving conditions are encountered, the Contractor shall stop further excavation until implementing the method to prevent ground caving as specified in the Shaft Construction Plan.

In the last sentence of the fifth paragraph, "approved" is revised to read "accepted".

In the seventh paragraph, "approval" is revised to read "acceptance".

In the eighth paragraph, the third sentence is revised to read:

> The Contractor shall install the steel reinforcing bar cage as specified in the Shaft Construction Plan.

In the second sentence of the last paragraph, "approval" is revised to read "acceptance".

In the fourth sentence of the last paragraph, the word "approved" is deleted.

6-12.3(6) Precast Concrete Panel Fabrication and Erection

In item number 3, the second paragraph is revised to read:

> After receiving the Engineer's review of the Shop Drawings, the Contractor shall cast one precast concrete panel to be used as the sample panel. The Contractor shall construct the sample panel in accordance with the procedure and details specified in the Shop Drawings. The Contractor shall make the sample panel available to the Engineer for acceptance.

Provided to Builders Exchange of WA, Inc. For usage Conditions Agreement see www.bxwa.com - Always Verify Scale

In item number 3, the first sentence of the third paragraph is revised to read:

Upon receiving the Engineer's acceptance of the sample panel, the Contractor shall continue production of precast concrete panels for the noise barrier wall.

In item number 3, the third sentence of the third paragraph is revised to read:

The sample panel shall be retained at the fabrication site until all precast concrete panels have been fabricated and accepted.

6-12.3(10) Finish Line Ground Dressing

In the last sentence of the second paragraph, the phrase "as approved by the Engineer" is deleted.

Section 6-13, Structural Earth Walls
January 5, 2015

6-13.3(1) Quality Assurance

In the first paragraph, the first sentence is revised to read:

The structural earth wall manufacturer shall provide a qualified and experienced representative to resolve wall construction problems.

In the first paragraph, the last sentence is revised to read:

Recommendations made by the structural earth wall manufacturer's representative shall be followed by the Contractor.

In the second paragraph, item number 4 is revised to read:

4. The base of the structural earth wall excavation shall be within three inches of the staked elevations, unless otherwise accepted or specified by the Engineer.

In the second paragraph, item number 6 is revised to read:

6. The backfill reinforcement layers shall be located horizontally and vertically within one inch of the locations shown in the structural earth wall Working Drawings.

6-13.3(2) Submittals

In the first paragraph, the first sentence is revised to read:

The Contractor, or the supplier as the Contractor's agent, shall furnish a Manufacturer's Certificate of Compliance certifying that the structural earth wall materials conform to the specified material requirements.

The second paragraph is revised to read:

A Type 1 Working Drawing of all test results, performed by the Contractor or the Contractor's supplier, which are necessary to assure compliance with the

Provided to Builders Exchange of WA, Inc. For usage Conditions Agreement see www.bxwa.com - Always Verify Scale

Specifications, shall submitted along with each Manufacturer's Certificate of Compliance.

In the third paragraph, the first sentence is revised to read:

Before fabrication, the Contractor shall submit a Type 1 Working Drawing consisting of the field construction manual for the structural earth walls, prepared by the wall manufacturer.

In the fourth paragraph, the first sentence is revised to read:

The Contractor, through the license/patent holder for the structural earth wall system, shall submit Type 2E Working Drawings consisting of detailed design calculations and details.

The last paragraph is deleted.

6-13.3(3) Excavation and Foundation Preparation

In the first paragraph, the last two sentences are revised to read:

The foundation for the Structure shall be graded level for a width equal to or exceeding the length of reinforcing as shown in the structural earth wall Working Drawings and, for walls with geogrid reinforcing, in accordance with Section 2-12.3. Prior to wall construction, the foundation, if not in rock, shall be compacted as accepted by the Engineer.

6-13.3(6) Welded Wire Faced Structural Earth Wall Erection

The first two sentences are revised to read:

The Contractor shall erect the welded wire wall reinforcement in accordance with the wall manufacturer's field construction manual. Construction geotextile for wall facing shall be placed between the backfill material within the reinforced zone and the coarse granular material immediately behind the welded wire wall facing, as shown in the Plans and the structural earth wall Working Drawings.

6-13.3(7) Backfill

The third paragraph is revised to read:

Misalignment or distortion of the precast concrete facing panels or concrete blocks due to placement of backfill outside the limits of this Specification shall be corrected in a manner acceptable to the Engineer.

In item number 4 of the fifth paragraph, the phrase "as approved by the Engineer" is deleted.

The last paragraph is deleted.

6-13.3(8) Guardrail Placement

In the first sentence of the second paragraph, "approval" is revised to read "permission".

Provided to Builders Exchange of WA, Inc. For usage Conditions Agreement see www.bxwa.com - Always Verify Scale

6-13.3(9) SEW Traffic Barrier and SEW Pedestrian Barrier

The first paragraph (up until the colon) is revised to read:

> The Contractor, in conjunction with the structural earth wall manufacturer, shall design and detail the SEW traffic barrier and SEW pedestrian barrier in accordance with Section 6-12.3(2) and the above ground geometry details shown in the Plans. The barrier Working Drawings and supporting calculations shall be Type 2E and shall include, at a minimum, the following:

Section 6-14, Geosynthetic Retaining Walls
January 5, 2015

6-14.2 Materials

In the first paragraph, the Section number next to "Anchor rods and associated nuts, washers and couplers" is revised to read:

> 9-06.5(4)

The following new paragraph is inserted after the first paragraph:

> Anchor plate shall conform to ASTM A 36, ASTM A 572 Grade 50, or ASTM A 588.

6-14.3(2) Submittals

The first paragraph (up until the colon) is revised to read:

> The Contractor shall submit Type 2 Working Drawings consisting of detailed Plans for each wall. As a minimum, the submittals shall include the following:

6-14.3(4) Erection and Backfill

In the second sentence of the second paragraph, "approved by" is revised to read "acceptable to".

In the last sentence of the fifth paragraph, "approval" is revised to read "permission".

The sixth paragraph is deleted.

In item number 5 in the eighth paragraph, the phrase "as approved by the Engineer" is deleted.

In the ninth paragraph, the first sentence is revised to read:

> The Contractor shall construct wall corners at the locations shown in the Plans, and in accordance with the wall corner construction sequence and method in the Working Drawing submittal.

In the last paragraph, the first sentence is revised to read:

> Where required by retaining wall profile grade, the Contractor shall terminate top layers of retaining wall geosynthetic and backfill in accordance with the method in the Working Drawing submittal.

Provided to Builders Exchange of WA, Inc. For usage Conditions Agreement see www.bxwa.com - Always Verify Scale

6-14.5 Payment

In the paragraph following the Bid item "Concrete Fascia Panel", per square foot, "concrete leveling pad" is revised to read "concrete footing".

Section 6-15, Soil Nail Walls
January 5, 2015

6-15.3(3) Submittals

The first paragraph (excluding the numbered list) is revised to read:

> The Contractor shall submit Type 2 Working Drawings of the following information:

6-15.3(6) Soil Nailing

In the first paragraph, the last sentence is revised to read:

> Damaged or defective encapsulation shall be repaired in accordance with the manufacturer's recommendations.

The eighth paragraph is revised to read:

> If sections of the wall are constructed at different times than the adjacent soil nail sections, the Contractor shall use stabilizing berms, temporary slopes, or other measures acceptable to the Engineer, to prevent sloughing or failure of the adjacent soil nail sections.

6-15.3(8) Soil Nail Testing and Acceptance

In the first paragraph, the second sentence is revised to read:

> The Contractor shall submit Type 1 Working Drawings of all test data.

The last sentence of the seventh paragraph is revised to read:

> The Contractor shall submit Type 2E Working Drawings of the reaction frame.

6-15.3(8)A Verification Testing

In the third paragraph, the first sentence is revised to read:

> The Contractor shall submit Type 2E Working Drawings consisting of design details of the verification testing, including the system for distributing test load pressures to the excavation surface and appropriate nail bar size and reaction plate.

Section 6-16, Soldier Pile and Soldier Pile Tieback Walls
January 5, 2015

6-16.3(2) Submittals

The first paragraph is revised to read:

> The Contractor shall submit Type 2 Working Drawings consisting of Shop Plans as specified in Section 6-03.3(7) for all structural steel, including the steel soldier piles,

Provided to Builders Exchange of WA, Inc. For usage Conditions Agreement see www.bxwa.com - Always Verify Scale

and shall submit Type 2 Working Drawings consisting of Shop Plans and other details as specified in Section 6-17.3(3) for permanent ground anchors.

The second paragraph is revised to read:

The Contractor shall submit Type 1 Working Drawings consisting of the permanent ground anchor grout mix design and the procedures for placing the grout.

The third paragraph (excluding the numbered list) is revised to read:

The Contractor shall submit Type 2E Working Drawings consisting of Forming Plans for the concrete fascia panels, as specified in Sections 6-02.3(16) and 6-02.3(17).

In the fourth paragraph, the first sentence is revised to read:

The Contractor shall submit Type 2 Working Drawings consisting of a Shaft Installation Plan.

The last paragraph is deleted.

6-16.3(3) Shaft Excavation

In the third paragraph, the last sentence is revised to read:

A temporary casing, slurry, or other methods specified in the Shaft Installation Plan shall be used if necessary to ensure such safety and stability.

The fourth paragraph is revised to read:

Where caving in conditions are encountered, no further excavation will be allowed until the Contractor has implemented the method to prevent ground caving as submitted in accordance with item 4 of the Shaft Installation Plan.

The sixth paragraph is revised to read:

The excavated shaft shall be inspected and receive acceptance by the Engineer prior to proceeding with construction.

6-16.3(6)B Temporary Lagging

The second paragraph (up until the colon) is revised to read:

The Contractor shall submit Type 2E Working Drawings consisting of the soldier pile wall lagging design details and supporting design calculations. The submittal shall include, at a minimum, the following:

In item number 4 of the second paragraph, “approved by” is revised to read “acceptable to”.

The last paragraph (excluding the table) is revised to read:

Notwithstanding the requirements of Section 1-06.1, steel materials used by the Contractor as temporary lagging may be salvaged steel provided that the use of such

Provided to Builders Exchange of WA, Inc. For usage Conditions Agreement see www.bxwa.com - Always Verify Scale

salvaged steel materials shall be subject to visual inspection and acceptance by the Engineer. For salvaged steel materials where the grade of steel cannot be positively identified, the design stresses for the steel shall conform to the Section 6-02.3(17)B requirements for salvaged steel, regardless of whether rivets are present or not.

6-16.3(6)D Installing Lagging and Permanent Ground Anchor

In the last sentence of the second paragraph, the phrase "as approved by the Engineer" is deleted.

In the last sentence of the fourth paragraph, the phrase "as approved by the Engineer" is deleted.

6-16.3(8) Concrete Fascia Panel

In the first paragraph, the phrase "as approved by the Engineer" is deleted.

Section 6-17, Permanent Ground Anchors
August 3, 2015

6-17.3(3) Submittals

The first paragraph is revised to read:

The Contractor shall submit Type 2E Working Drawings consisting of details and structural design calculations for the ground anchor system or systems intended for use.

The second paragraph is revised to read:

The Contractor shall submit a Type 1 Working Drawing consisting of a detailed description of the construction procedure proposed for use.

The third paragraph (up until the colon) is revised to read:

The Contractor shall submit a Type 2 Working Drawing consisting of ground anchor schedule giving:

In the fourth paragraph, the first sentence is revised to read:

The Contractor shall submit a Type 2 Working Drawing detailing the ground anchor tendon and the corrosion protection system.

In the fourth paragraph, item number 3 is revised to read:

3. Unbonded length corrosion protection system, including the permanent rubber seal between the trumpet and the tendon unbonded length corrosion protection and the transition between the tendon bond length and the unbonded tendon length corrosion protection.

The last five paragraphs are deleted and replaced with the following four new paragraphs:

Provided to Builders Exchange of WA, Inc. For usage Conditions Agreement see www.bxwa.com - Always Verify Scale

The Contractor shall submit Type 2 Working Drawings consisting of Shop Plans as specified in Section 6-03.3(7) for all structural steel, including the permanent ground anchors.

The Contractor shall submit Type 1 Working Drawings consisting of the mix design for the grout conforming to Section 9-20.3(4) and the procedures for placing the grout. The Contractor shall also submit the methods and materials used in filling the annulus over the unbonded length of the anchor.

The Contractor shall submit Type 2 Working Drawings consisting of the method proposed to be followed for the permanent ground anchor testing. This shall include all necessary Drawings and details to clearly describe the method proposed.

The Contractor shall submit Type 2 Working Drawings consisting of calibration data for each load cell, test jack, pressure gauge and master pressure gauge to be used. The calibration tests shall have been performed by an independent testing laboratory and tests shall have been performed within 60 calendar days of the date submitted.

6-17.3(5) Tendon Fabrication

In the tenth paragraph, the last sentence is deleted.

The twelfth paragraph is revised to read:

The total anchor length shall not be less than that indicated in the Plans or the Working Drawing submittal.

In the last paragraph, the phrase "as approved by the Engineer" is deleted.

6-17.3(7) Installing Permanent Ground Anchor

In the second paragraph, the third sentence is revised to read:

The Contractor's method to prevent ground movement shall be submitted as a Type 2 Working Drawing.

In the second paragraph, the second to last sentence is revised to read:

At the point of entry the ground anchor shall be installed within plus or minus three degrees of the inclination from horizontal shown in the Plans or the Working Drawing submittal.

Section 6-18, Shotcrete Facing
January 5, 2015

6-18.3(1) Submittals

In the first paragraph, the first sentence (up until the colon) is revised to read:

The Contractor shall submit Type 2 Working Drawings consisting of the following:

In the first paragraph, item number 2 is revised to read:

Provided to Builders Exchange of WA, Inc. For usage Conditions Agreement see www.bxwa.com - Always Verify Scale

2. Method and equipment used to apply, finish and cure the shotcrete facing.

The last paragraph is deleted.

6-18.3(2) Mix Design

In the first paragraph, the second and third sentences are deleted.

In the last sentence of the second paragraph, "and approved by the Engineer" is deleted.

6-18.3(3)A Preproduction Testing

In the last sentence, "approved" is revised to read "accepted".

6-18.3(7) Shotcrete Application

In the last paragraph, the first sentence is revised to read:

> If field inspection or testing, by the Engineer, indicates that any shotcrete produced, fails to meet the requirements, the Contractor shall immediately modify procedures, equipment, or system, as necessary to produce Specification material.

Section 6-19, Shafts
August 3, 2015

6-19.3(2) Shaft Construction Submittal

The last sentence is revised to read:

> The submittals shall be Type 2 Working Drawings, except the shaft slurry technical assistance submittal shall be Type 1.

6-19.3(3) Shaft Excavation

In the first paragraph, the phrase "as approved by the Engineer" is deleted.

6-19.3(3)B4 Temporary Telescoping Shaft Casing

In the first paragraph, the first sentence of item number 1 is revised to read:

> The Contractor shall submit the request to use temporary telescoping casing as a Type 2 Working Drawing.

6-19.3(3)D Bottom of Shaft Excavation

In the first sentence of the second paragraph, "approved" is revised to read "accepted".

6-19.3(3)E Shaft Obstruction

In the last sentence, "approved" is revised to read "accepted".

6-19.3(3)F Voids Between Permanent Casing and Shaft Excavation

In the last sentence, the words "and as approved by the Engineer" are deleted.

6-19.3(3)G Operating Shaft Excavation Equipment From an Existing Bridge

The second sentence is revised to read:

Provided to Builders Exchange of WA, Inc. For usage Conditions Agreement see www.bxwa.com - Always Verify Scale

If necessary and safe to do so, and if the Contractor submits a Type 2 Working Drawing consisting of a written request in accordance with Section 6-01.6, the Engineer may permit operation of drilling equipment on a bridge.

6-19.3(3)H Seals for Shaft Excavation in Water

The first paragraph is revised to read:

When shafts are constructed in water and the Plans show a seal between the casing shoring and the upper portion of the permanent casing of the shaft, the Contractor shall construct a seal in accordance with the shaft installation narrative specified in Section 6-19.3(2)B Item 7.

The last sentence of the last paragraph is revised to read:

If the Contractor uses a casing shoring diameter other than that specified in the Plans, the Contractor shall submit a revised seal design in accordance with Section 6-19.3(2)B Item 7.

6-19.3(4)C Slurry Sampling and Testing

The second to last sentence of the first paragraph is revised to read:

Synthetic slurry shall conform to Section 9-36.2(2), the quality control plan included in the shaft installation narrative in accordance with Section 6-19.3(2)B Item 4.

The second sentence of the second paragraph is revised to read:

These records shall be submitted as a Type 1 Working Drawing once the slurry system has been established in the first drilled shaft on the project.

6-19.3(4)E Maintenance of a Stable Shaft Excavation

In the last sentence of the first paragraph, “approval” is revised to read “review”.

6-19.3(4)F Disposal of Slurry and Slurry Contacted Spoils

This Section is revised to read:

The Contractor shall manage and dispose of the slurry wastewater in accordance with Section 8-01.3(1)C. Slurry-contacted spoils shall be disposed of as specified in the shaft installation narrative in accordance with Section 6-19.3(2)B, item 8, and in accordance with the following requirements:

1. Uncontaminated spoils in contact with water-only slurry may be disposed of as clean fill.

2. Uncontaminated spoils in contact with water slurry mixed with flocculants approved in Section 8-01.3(1)C3 may be disposed of as clean fill away from areas that drain to surface waters of the State.

3. Spoils in contact with synthetic slurry or water slurry with polymer-based additives or flocculants not approved in Section 8-01.3(1)C3 shall be

Provided to Builders Exchange of WA, Inc. For usage Conditions Agreement see www.bxwa.com - Always Verify Scale

disposed of in accordance with Section 2-03.3(7)C. With permission of the Engineer, the Contractor may re-use these spoils on-site.

4. Spoils in contact with mineral slurry shall be disposed of in accordance with Section 2-03.3(7)C. With permission of the Engineer, the Contractor may re-use these spoils on-site.

6-19.3(5)A Steel Reinforcing Bar Cage Assembly

In the second to last sentence of the first paragraph, the phrase "as approved by the Engineer" is deleted.

6-19.3(5)D Steel Reinforcing Bar Cage Support at Base of Shaft Excavation

The first sentence is revised to read:

For shafts with temporary casing within 15-feet of the bottom of shaft elevation as specified in the Plans, the Contractor may place quarry spalls or other rock backfill acceptable to the Engineer into the shaft below the specified bottom of shaft elevation as a means to support the steel reinforcing bar cage, provided that the materials and means to accomplish this have been addressed by the shaft installation narrative, as specified in Section 6-19.3(2)B Item 9.

6-19.3(6)C Care for CSL Access Tubes From Erection Through CSL Testing

In the last sentence, "as approved by the Engineer" is revised to read "acceptable to the Engineer".

6-19.3(8)C Requirements for Leaving Temporary Casing in Place

Item number 1 (up until the colon) is revised to read:

1. The Contractor shall submit a Type 2E Working Drawing of the following information:

In item C of item number 1, the phrase "in accordance with Section 6-01.9" is deleted.

Item number 2 is deleted.

6-19.3(9)D Requirements to Continue Shaft Excavation Prior to Acceptance of First Shaft

This Section is revised to read:

Except as otherwise noted, the Contractor shall not commence subsequent shaft excavations until receiving the Engineer's acceptance of the first shaft, based on the results and analysis of the crosshole sonic log testing for the first shaft. The Contractor may commence subsequent shaft excavations prior to receiving the Engineer's acceptance of the first shaft, provided the following condition is satisfied:

The Engineer permits continuing with shaft construction based on the Engineer's observations of the construction of the first shaft, including, but not limited to, conformance to the shaft installation narrative in accordance with Section 6-19.3(2)B, and the Engineer's review of Contractor's daily reports and Inspector's

Provided to Builders Exchange of WA, Inc. For usage Conditions Agreement see www.bxwa.com - Always Verify Scale

daily logs concerning excavation, steel reinforcing bar placement, and concrete placement.

6-19.3(9)F Contractor's Investigation and Remedial Action Plan

This Section is revised to read:

For all shafts determined to be unacceptable, the Contractor shall submit a Type 2 Working Drawing consisting of a plan for further investigation or remedial action. All modifications to the dimensions of the shafts, as shown in the Plans, required by the investigation and remedial action plan shall be supported by calculations and Working Drawings. All investigation and remedial correction procedures and designs shall be submitted.

6-19.3(9)H Cored Holes

The first sentence of the second paragraph is revised to read:

Prior to beginning coring, the Contractor shall submit Type 2 Working Drawings consisting of the method and equipment used to drill and remove cores from shaft concrete.

6-19.4 Measurement

The ninth paragraph is revised to read:

Steel reinforcing bar for shaft and epoxy-coated steel reinforcing bar for shaft will be measured as specified in Section 6-02.4.

6-19.5 Payment

The following new paragraph is inserted before the second to last paragraph:

If drilled shaft tools, cutting teeth, casing or Kelly bar is damaged as a result of the obstruction removal Work, the Contractor will be compensated for the costs to repair this equipment in accordance with Section 1-09.6.

Section 7-02, Culverts
August 3, 2015

7-02.2 Materials

This first two paragraphs are revised to read:

Materials shall meet the requirements of the following Sections:

Portland Cement	9-01
Aggregate for Portland Cement Concrete	9-03.1
Plain Concrete Culvert Pipe	9-05.3(1)
Reinforced Concrete Culvert Pipe	9-05.3(2)
Beveled Concrete End Sections	9-05.3(3)
Steel Culvert Pipe and Pipe Arch	9-05.4
Steel Nestable Pipe and Pipe Arch	9-05.4(8)
Steel End Sections	9-05.4(9)
Aluminum Culvert Pipe	9-05.5

Provided to Builders Exchange of WA, Inc. For usage Conditions Agreement see www.bxwa.com - Always Verify Scale

Aluminum End Sections	9-05.5(6)
Solid Wall PVC Culvert Pipe	9-05.12(1)
Profile Wall PVC Culvert Pipe	9-05.12(2)
Corrugated Polyethylene Culvert Pipe	9-05.19
Steel Rib Reinforced Polyethylene Culvert Pipe	9-05.21
High-Density Polyethylene (HDPE) Pipe	9-05.23
Polypropylene Culvert Pipe	9-05.24
Steel Reinforcing Bar	9-07.2
Epoxy-Coated Steel Reinforcing Bar	9-07.3
Wire Mesh	9-07.7
Deformed Wire	9-07.8
Cold Drawn Wire	9-07.9
Grout	9-20.3(2)
Mortar	9-20.4
Concrete Curing Materials and Admixtures	9-23

This Section is supplemented with the following new paragraph:

Elastomeric gaskets shall conform to ASTM D 1056 Type 2 Class C Grade 1.

7-02.3 Construction Requirements

This Section is supplemented with the following new sub-sections:

7-02.3(6) Precast Reinf. Conc. Three Sided Structures, Box Culverts and Split Box Culverts

The Contractor shall design, fabricate, and erect precast reinforced concrete three sided Structures (PRCTSS), precast reinforced concrete box culverts (PRCBC), and precast reinforced concrete split box culverts (PRCSBC) in accordance with these Specifications and the details shown in the Plans, including associated footings, slab bases, wingwalls, cutoff walls, and headwalls.

7-02.3(6)A General

Except as otherwise noted by these Specifications, the precast Structures (PRCTSS, PRCBC and PRCSBC) shall conform to all requirements of Section 6-02.3(28).

7-02.3(6)A1 Design Criteria

The precast Structures shall be designed for a minimum service life of 75-years in accordance with the WSDOT Geotechnical Design Manual (M46-03), WSDOT Bridge Design Manual LRFD (M23-50), and AASHTO LRFD Bridge Design Specifications, latest edition and current interims in effect on the Bid advertising date, including an HL-93 vehicular live load. Live load for the Extreme Event-I Limit State shall be applied in accordance with WSDOT Bridge Design Manual LRFD (M23-50) Section 3.5.

Precast Structures with an overall span length greater than 20-feet (measured along the centerline of Roadway from inside face to inside face of hydraulic opening) shall be designed for seismic loads in accordance with FHWA-NHI-10-034, Technical Manual for Design and Construction of Road Tunnels – Civil Elements, Chapter 13. The AASHTO LRFD Bridge Design

Provided to Builders Exchange of WA, Inc. For usage Conditions Agreement see www.bxwa.com - Always Verify Scale

Specifications Section 12.6.1 exemption from seismic loading does not apply. The design shall evaluate the seismic effects of transient racking deformations.

Wingwalls, cutoff walls, and headwalls associated with the precast Structures shall be designed in accordance with the WSDOT Geotechnical Design Manual (M46-03) and Chapter 11 of AASHTO LRFD Bridge Design Specifications, latest edition and current interims in effect on the Bid advertising date, including seismic loads.

The Contractor shall use the geotechnical report prepared for this project and available through the source(s) specified in the Special Provisions under Section 1-02.4(2).

Whenever the minimum finished backfill or surfacing depth above the top of the Structure is less than 1'-0" (except when the top of the Structure is directly exposed to vehicular traffic), either all steel reinforcing bars in the span unit shall be epoxy-coated with 1-1/2" minimum concrete cover from the face of concrete to the face of the top mat of steel reinforcing bars, or the minimum concrete cover shall be 2-1/2". Whenever the top of the Structure is directly exposed to vehicular traffic, all steel reinforcing bars in the span unit shall be epoxy-coated and the minimum concrete cover dimension from face of concrete to the face of the top mat of steel reinforcing bars shall be 2-1/2". Concrete cover from the face of any concrete surface to the face of any steel reinforcement shall be 1-inch minimum at all other locations.

7-02.3(6)A2 Submittals

The Contractor shall submit Type 2E Working Drawings consisting of Shop Drawings of the precast Structures with supporting design calculations.

In addition to items 1 through 6 under Shop Drawing content requirements in Section 6-02.3(28)A, the following Shop Drawing details shall be submitted:

1. Footing and slab base details for PRCTSS.

2. Wingwall, headwall, and cutoff wall details.

3. Erection and backfill procedure.

4. Complete, site specific, itemized bar list for all steel reinforcement.

If water is expected to be present in the excavation, or is found to be present once excavation begins, the Contractor shall submit a Type 2 Working Drawing consisting of a dewatering plan.

For precast Structures with a span length greater than 20-feet (as defined in Section 7-02.3(6)A1), the Working Drawing submittal shall include a load rating prepared in accordance with the AASHTO Manual for Bridge Evaluation and WSDOT Bridge Design Manual LRFD (M23-50) Section 13.

Provided to Builders Exchange of WA, Inc. For usage Conditions Agreement see www.bxwa.com - Always Verify Scale

Soil pressures used shall include effects from the backfill material and compaction methods, and shall be in accordance with the WSDOT Geotechnical Design Manual (M46-03) and the geotechnical report prepared for the project.

7-02.3(6)A3 Casting

Concrete shall conform to Section 6-02.3(28)B, with a 28-day compressive strength as specified in the Working Drawings submittal.

7-02.3(6)A4 Excavation and Bedding Preparation

All excavated material shall be disposed of in accordance with Section 2-09.3(1)D.

If water is present within the excavation, the Contractor shall dewater the excavated area in accordance with the dewatering plan Working Drawing submittal before placing the bedding material.

The bedding for the precast Structure, consisting of the backfill elements shown in the Plans, shall be placed and compacted in accordance with Section 7-08.3(1)C.

7-02.3(6)B Precast Reinf. Conc. Three Sided Structures (PRCTSS)

7-02.3(6)B1 Design Criteria

In addition to the design criteria specified in Section 7-02.3(6)A1, the following shall apply.

PRCTSS shall be precast rigid frames with monolithic upper corners internally reinforced for moment and shear resistance, except as otherwise noted. Connecting separate and individually precast concrete panels together to form the specified three sided frame geometry is acceptable provided the Structure system provides moment and shear resistance from the lateral load from backfill placed full width and full height at one side only of the PRCTSS.

7-02.3(6)B2 Finishing

The Contractor shall mark the following information, using waterproof paint, on the inside of a vertical leg of each precast section of the Structure:

1. PRCTSS span and rise dimensions, minimum and maximum design earth cover dimensions, and vehicular live load for design (HL-93).

2. WSDOT Contract Number and date of fabrication.

3. Name or trademark of the fabricator.

7-02.3(6)B3 Erection

PRCTSS shall be erected and backfilled in accordance with the erection sequence specified in the processed Working Drawings, and the construction equipment restrictions specified in Section 6-02.3(25)O.

Provided to Builders Exchange of WA, Inc. For usage Conditions Agreement see www.bxwa.com - Always Verify Scale

Adjacent precast sections shall be connected by welding the weld-tie anchors in accordance with Section 6-02.3(25)O. After connecting the weld-tie anchors, the Contractor shall paint the exposed metal surfaces with one coat of field primer conforming to Section 9-08.1(2)F. Keyways shall be filled with grout conforming to Section 6-02.3(25)O.

7-02.3(6)C Precast Reinf. Conc. Box Culverts (PRCBC) and Precast Reinf. Conc. Split Box Culverts (PRCSBC)

7-02.3(6)C1 Casting

PRCSBC shall consist of lid elements and "U" shaped base elements. The vertical legs of the "U" shaped base elements shall be full height matching the rise of the culvert, except as otherwise specified for culvert spans greater than 20-feet. For PRCSBC spans greater than 20-feet (as defined in Section 7-02.3(6)A1), the lid elements may include vertical legs of a maximum length of 4-feet, provided the legs of the base and top units are connected in accordance with Section 7-02.3(6)C3.

The joints of the "U" shaped base elements and the lid elements shall be staggered such that the lid element joints occur between quarter-points of the base element.

When the top unit includes vertical legs, the legs of the base and top units shall be connected by weld-tie anchors in accordance with Section 6-02.3(25)O. The weld-tie anchor spacing shall not exceed 6'-0".

7-02.3(6)C2 Finishing

The following information shall be legibly and permanently marked on one inside face of each PRCBC element, or one inside face of each PRCSBC "U" shaped base element by indentation, waterproof paint, or other means acceptable to the Engineer:

1. Box section span and rise dimensions, minimum and maximum design earth cover dimensions, and vehicular live load for design (HL-93).

2. WSDOT Contract Number and date of fabrication.

3. Name or trademark of the fabricator.

7-02.3(6)C3 Erection

PRCBC and PRCSBC shall be erected and backfilled in accordance with the erection sequence specified in the Working Drawing submittal, and the construction equipment restrictions specified in Section 6-02.3(25)O.

Elastomeric gaskets shall be installed at all joints between precast elements (except weld-tie connected joints), and shall be in full contact with both precast elements at the joint prior to the remainder of the joint being completely filled with grout.

Provided to Builders Exchange of WA, Inc. For usage Conditions Agreement see www.bxwa.com - Always Verify Scale

When the top unit of a PRCSBC includes vertical legs, the legs of the base and top units shall be connected by welding the weld-tie anchors in accordance with Section 6-02.3(25)O. After connecting the weld-tie anchors, the Contractor shall paint the exposed metal surfaces with one coat of field primer conforming to Section 9-08.1(2)F. Keyways shall be filled with grout conforming to Section 6-02.3(25)O.

7-02.5 Payment

This Section is supplemented with the following three new Bid items:

"Precast Reinf. Conc. Three Sided Structure No.___", lump sum.

"Precast Reinf. Conc. Box Culvert No.___", lump sum.

"Precast Reinf. Conc. Split Box Culvert No.___", lump sum.

Section 8-01, Erosion Control and Water Pollution Control
January 5, 2015

8-01.2 Materials

This Section is supplemented with the following new paragraph:

For all seed the Contractor shall furnish the Engineer with the following documentation:

1. The State or Provincial seed dealer license and endorsements.

2. Copies of Washington State Department of Agriculture (WSDA) test results on each lot of seed. Test results must be within six months prior to the date of application.

8-01.3(1)A Submittals

The first sentence in the second paragraph is revised to read:

Modified TESC Plans shall meet all requirements of the current edition of the WSDOT Temporary Erosion and Sediment Control Manual M 3109.

8-01.3(1)C Water Management

Items number 1 through 3 are deleted.

This Section is supplemented with the following new subsections:

8-01.3(1)C1 Disposal of Dewatering Water

When uncontaminated groundwater with a pH range of 6.5 – 8.5 is encountered in an excavation, it may be disposed of as follows:

1. When the turbidity of the groundwater is 25 NTU or less, it may bypass detention and treatment facilities and be discharged into the stormwater

Provided to Builders Exchange of WA, Inc. For usage Conditions Agreement see www.bxwa.com - Always Verify Scale

conveyance system at a rate that will not cause erosion or flooding in the receiving surface water body.

2. When the turbidity of the groundwater is not more than 25 NTU above or 125% of the turbidity of the site stormwater runoff, whichever is greater, the same detention and treatment facilities as used to treat the site runoff may be used.

3. When the turbidity of the groundwater is more than 25 NTU above or 125% of the turbidity of the site stormwater runoff, whichever is greater, the groundwater shall be treated separately from the site stormwater.

Alternatively, the Contractor may pursue independent disposal and treatment alternatives that do not use the stormwater conveyance system.

8-01.3(1)C2 Process Wastewater

Wastewater generated on-site as a byproduct of a construction process shall not be discharged to surface waters of the State. Some sources of process wastewater may be infiltrated in accordance with the NPDES Construction Stormwater General Permit.

8-01.3(1)C3 Shaft Drilling Slurry Wastewater

Wastewater generated on-site during shaft drilling activity shall be managed and disposed of in accordance with the requirements below. No shaft drilling slurry wastewater shall be discharged to surface waters of the State. Neither the sediment nor liquid portions of the shaft drilling slurry wastewater shall be contaminated, as detectable by visible or olfactory indication (e.g., chemical sheen or smell).

1. Water-only shaft drilling slurry or water slurry with approved flocculants may be infiltrated on-site. Flocculants used shall meet the requirements of Section 9-14.5(1) or shall be chitosan products listed as General Use Level Designation (GULD) on the Department of Ecology's stormwater treatment technologies webpage for construction treatment. Infiltration is permitted if the following requirements are met:

   a. Wastewater shall have a pH of 6.5 – 8.5 prior to discharge.

   b. The source water meets drinking water standards or the Groundwater Quality Criteria listed in WAC 173-200-040.

   c. The amount of flocculant added to the slurry shall be kept to the minimum needed to adequately settle out solids. The flocculant shall be thoroughly mixed into the slurry.

   d. Infiltration locations shall be at least 100 feet away from surface waters, wells, on-site sewage systems, aquifer-sensitive recharge areas, sole source aquifers, and well-head protection areas. Before infiltration begins, there shall be a minimum of 5 feet of unsaturated soil between the soil surface receiving the wastewater for infiltration and the groundwater surface (i.e., saturated soil).

Provided to Builders Exchange of WA, Inc. For usage Conditions Agreement see www.bxwa.com - Always Verify Scale

e. The slurry removed from the shaft shall be contained in a leak proof cell or tank for a minimum of 3 hours.

f. Within a 24 hour period, a maximum of 21,000 gallons of slurry wastewater may be infiltrated in an infiltration location. The infiltration rate shall be reduced if needed to prevent wastewater from leaving the infiltration location. The infiltration site shall be monitored regularly during infiltration activity. All wastewater discharged to the ground must fully infiltrate and discharges must stop before the end of each Work day.

g. After infiltration activity is complete, loose sediment in the infiltration location that may have resulted from the infiltration activity or the removal of BMPs used to manage infiltration activity shall be stabilized to prevent mobilization by stormwater runoff.

h. Drilling spoils and settled sediments remaining in the containment cell or tank shall be disposed of in accordance with Section 6-19.3(4)F.

i. Infiltration locations shall be marked on the on-site Temporary Erosion and Sediment Control (TESC) Plan sheets before the infiltration activity begins.

j. Prior to infiltrating water-only shaft drilling slurry or water slurry with approved flocculants, the Contractor shall submit a Shaft Drilling Slurry Wastewater Management and Infiltration Plan as a Type 2 Working Drawing. This Plan shall be kept on-site, adapted if needed to meet the construction requirements, and updated to reflect what is being done in the field. The Working Drawing shall include, at a minimum, the following information:

    i. Plan sheet showing the proposed infiltration location and all surface waters, wells, on-site sewage systems, aquifer-sensitive recharge areas, sole source aquifers, and well-head protection areas within 150 feet.

    ii. The proposed elevation of soil surface receiving the wastewater for infiltration and the anticipated phreatic surface (i.e., saturated soil).

    iii. The source of the water used to produce the slurry.

    iv. The estimated total volume of wastewater to be infiltrated.

    v. The approved flocculant to be used (if any).

    vi. The controls or methods (e.g., trenches, traps, berms, silt fence, dispersion, or discharge metering devices) that will be used to prevent surface wastewater runoff from leaving the infiltration location. The Working Drawing shall include all pertinent design

Provided to Builders Exchange of WA, Inc. For usage Conditions Agreement see www.bxwa.com - Always Verify Scale

details (e.g., sizing of trenches or traps, placement or height of berms, application techniques) needed to demonstrate the proposed controls or methods are adequate to prevent surface wastewater runoff from leaving the infiltration location.

vii. The strategy for removing slurry wastewater from the shaft and containing the slurry wastewater once it has been removed from the shaft.

viii. The strategy for monitoring infiltration activity and adapting methods to ensure compliance.

ix. A Contingency Plan that can be implemented immediately if it becomes evident that the controls in place or methods being used are not adequate.

x. The strategy for cleaning up the infiltration location after the infiltration activity is done. Cleanup shall include stabilizing any loose sediment on the surface within the infiltration area generated as a byproduct of suspended solids in the infiltrated wastewater or soil disturbance associated with BMP placement and removal.

2. Shaft drilling mineral slurry, synthetic slurry, or slurry with polymer additives not approved for infiltration shall be contained and disposed of by the Contractor at an approved disposal facility in accordance with Section 2-03.3(7)C. Spoils that have come into contact with mineral slurry shall be disposed of in accordance with Section 6-19.3(4)F.

8-01.3(1)C4 Management of Off-Site Water

Prior to disruption of the normal watercourse, the Contractor shall intercept the off-site surface water and pipe it either through or around the project site. This water shall not be combined with on-site stormwater. It shall be discharged at its preconstruction outfall point in such a manner that there is no increase in erosion below the site. The Contractor shall submit a Type 2 Working Drawing consisting of the method for performing this Work.

8-01.3(2)A Preparation for Application

This Section's content is deleted and replaced with the following two new subsections:

8-01.3(2)A1 Seeding

Areas to be cultivated are shown in the Plans or specified in the Special Provisions. The areas shall be cultivated to the depths specified to provide a reasonably firm but friable seedbed. Cultivation shall take place no sooner than 2 weeks prior to seeding.

All areas to be seeded, including excavated slopes shall be compacted and prepared unless otherwise specified or ordered by the Engineer. A cleated roller, crawler tractor, or similar equipment that forms longitudinal depressions at least 2 inches deep shall be used for compaction and preparation of the surface to be seeded.

Provided to Builders Exchange of WA, Inc. For usage Conditions Agreement see www.bxwa.com - Always Verify Scale

The entire area shall be uniformly covered with longitudinal depressions formed perpendicular to the natural flow of water on the slope. The soil shall be conditioned with sufficient water so the longitudinal depressions remain in the soil surface until completion of the seeding.

Prior to seeding, the finished grade of the soil shall be 1 inch below the top of all curbs, junction and valve boxes, walks, driveways, and other Structures. The soil shall be in a weed free and bare condition.

All bags of seed shall be brought to the site in sealed bags and shall have seed labels attached showing the seed meets the Specifications. Seed which has become wet, moldy, or otherwise damaged in transit or storage will not be accepted.

8-01.3(2)A2 Temporary Seeding

A cleated roller, crawler tractor, or similar equipment that forms longitudinal depressions at least 2 inches deep shall be used for compaction and preparation of the surface to be seeded. The entire area shall be uniformly covered with longitudinal depressions formed perpendicular to the natural flow of water on the slope. The soil shall be conditioned with sufficient water so the longitudinal depressions remain in the soil surface until completion of the seeding.

8-01.3(2)B Seeding and Fertilizing

In the list in the second paragraph, item numbers 1-5 are revised to read:

1. A hydro seeder that utilizes water as the carrying agent, and maintains continuous agitation through paddle blades. It shall have an operating capacity sufficient to agitate, suspend, and mix into a homogeneous slurry the specified amount of seed and water or other material. Distribution and discharge lines shall be large enough to prevent stoppage and shall be equipped with a set of hydraulic discharge spray nozzles that will provide a uniform distribution of the slurry.

2. Blower equipment with an adjustable disseminating device capable of maintaining a constant, measured rate of material discharge that will ensure an even distribution of seed at the rates specified.

3. Helicopters properly equipped for aerial seeding.

4. Power-drawn drills or seeders.

5. Areas in which the above methods are impractical may be seeded by hand methods.

8-01.3(2)C Liming

This Section, including title, is deleted in its entirety and replaced with the following:

8-01.3(2)C Vacant

8-01.3(2)D Mulching

The first sentence of the second paragraph is revised to read:

Provided to Builders Exchange of WA, Inc. For usage Conditions Agreement see www.bxwa.com - Always Verify Scale

Distribution of straw mulch material shall be by means that utilizes forced air to blow mulch material on seeded areas.

8-01.3(11) Outlet Protection

In the last sentence, "Section 9-13.6" is revised to read "Section 9-13.1(5)".

8-01.4 Measurement

In the twelfth paragraph, "liming" is deleted.

8-01.5 Payment

The Bid item "Liming", per acre is deleted.

Section 8-02, Roadside Restoration
January 5, 2015

8-02.3(1) Responsibility During Construction

The last sentence of the second paragraph is revised to read:

This Work shall include keeping the planted and seeded areas free from insect infestation, weeds or unwanted vegetation, litter, and other debris along with retaining the finished grades and mulch in a neat uniform condition.

8-02.3(2) Roadside Work Plan

This Section's title is revised to read:

Work Plans

This Section's content is deleted in its entirety and replaced with the following new subsections:

8-02.3(2)A Roadside Work Plan

Before starting any Work that disturbs the earth and as described in Sections 8-01, 8-02 and 8-03, the Contractor shall submit a Roadside Work Plan. The Roadside Work Plan shall be submitted as a Type 1 Working Drawing and shall define the Work necessary to provide all Contract requirements, including: wetland excavation, soil preparation, habitat Structure placement, planting area preparation, seeding area preparation, bark mulch and compost placement, seeding, planting, plant replacement, irrigation, and weed control in narrative form.

The Roadside Work Plan shall also include a copy of the approved progress schedule.

8-02.3(2)B Weed and Pest Control Plan

The Weed and Pest Control Plan shall be submitted as a Type 1 Working Drawing. The Weed and Pest Control Plan shall include scheduling and methods of all control measures required under the Contract or proposed by the Contractor including soil preparation methods to meet the required soil surface conditions in the planting, bark mulch, and wetland areas. The Weed Control Plan shall show general weed control including hand, mechanical and chemical methods, timing, application of herbicides

Provided to Builders Exchange of WA, Inc. For usage Conditions Agreement see www.bxwa.com - Always Verify Scale

including type, rate, use and timing, mowing, and noxious weed control. Target weeds and unwanted vegetation to be removed shall be identified and listed in the Weed Control Plan.

The Plan shall be prepared and signed by a licensed Commercial Pest Control Operator or Consultant when chemical pesticides are proposed. The Plan shall include methods of weed control; dates of weed control operations; and the name, application rate, and Material Safety Data Sheets of all proposed herbicides. In addition, the Contractor shall furnish the Engineer with a copy of the current product label for each pesticide and spray adjuvant to be used. These product labels shall be submitted with the Weed Control Plan for approval.

8-02.3(2)C Plant Establishment Plan

The Plant Establishment Plan shall be prepared in accordance with the requirements of Section 8-02.3(13) and submitted as a Type 1 Working Drawing. The Plan shall show the proposed scheduling of activities, materials, equipment to be utilized for the first-year plant establishment, and an emergency contact person. The Plan shall include the management of the irrigation system, when applicable. Should the Plan become unworkable at any time during the first-year plant establishment, the Contractor shall submit a revised Plan prior to proceeding with further Work.

8-02.3(3) Weed and Pest Control

This Section is supplemented with the following new paragraph:

Grass, including grass applied in accordance with Section 8-01, growing within the mulch ring of a plant shall be considered a weed and be controlled on the project in accordance with the Weed and Pest Control Plan.

8-02.3(4) Topsoil

The last sentence of the first paragraph is revised to read:

After the topsoil has been spread, all large clods, hard lumps, and rocks 2 inches in diameter and larger, and litter shall be raked up, removed, and disposed of by the Contractor.

The following new paragraph is inserted after the first paragraph:

Topsoil stockpiled for project use shall be protected to prevent erosion and weed growth. Weed growth on topsoil stockpile sites shall be immediately eliminated in accordance with the approved Weed and Pest Control Plan.

8-02.3(4)C Topsoil Type C

The last sentence is revised to read:

Topsoil Type C shall meet the requirements of Sections 8-02.3(4), 8-02.3(4)B, and 9-14.1(3).

8-02.3(12) Completion of Initial Planting

Item number 4 in the last paragraph is deleted.

Provided to Builders Exchange of WA, Inc. For usage Conditions Agreement see www.bxwa.com - Always Verify Scale

8-02.3(13) Plant Establishment

The first sentence of the second paragraph is deleted.

The second paragraph is supplemented with the following new sentence:

The 1 calendar year shall be extended an amount equal to any periods where the Contractor does not comply with the Plant Establishment Plan.

The first sentence of the fourth paragraph is revised to read:

During the first year of plant establishment under PSIPE (Plant Selection Including Plant Establishment), the Contractor shall meet monthly with the Engineer for the purpose of joint inspection of the planting material on a mutually agreed upon schedule.

The last two paragraphs are deleted.

8-02.4 Measurement

This Section is supplemented with the following:

Plant selection will be measured per each.

PSIPE __ (Plant Selection Including Plant Establishment) will be measured per each.

8-02.5 Payment

The paragraph following the Bid item "Topsoil Type ____", per acre is revised to read:

The unit Contract price per acre for "Topsoil Type ____" shall be full payment for all costs for the specified Work.

The Bid item "PSIPE ___", per each and the paragraph following the Bid item are revised to read:

"PSIPE ___", per each.

The unit Contract price for "Plant Selection ___", per each, and "PSIPE ___", per each, shall be full pay for all Work necessary for weed control within the planting area, planting area preparation, fine grading, planting, cultivating, plant storage and protection, fertilizer and root dip, staking, cleanup, and water necessary to complete planting operations as specified to the end of first year plant establishment.

The Bid item "Plant Establishment - ____ Year" is deleted.

Section 8-04, Curbs, Gutters, and Spillways
January 5, 2015

8-04.2 Materials

The referenced Section for the following item is revised to read:

Hand Placed Riprap 9-13.1(4)

Provided to Builders Exchange of WA, Inc. For usage Conditions Agreement see www.bxwa.com - Always Verify Scale

8-04.3(1) Cement Concrete Curbs, Gutters, and Spillways

The first sentence in the fourth paragraph is revised to read:

> Expansion joints in the curb or curb and gutter shall be spaced as shown in the Plans, and placed at the beginning and ends of curb returns, drainage Structures, bridges, and cold joints with existing curbs and gutters.

In the third sentence of the fourth paragraph, "¼-inch" is revised to read "⅜-inch".

8-04.3(1)A Extruded Cement Concrete Curb

The second sentence in the second paragraph is revised to read:

> Cement concrete curbs shall be anchored to the existing pavement by placing steel reinforcing bars 1 foot on each side of every joint.

The third paragraph is revised to read:

> Steel reinforcing bars shall meet the dimensions shown in the Standard Plans.

Section 8-09, Raised Pavement Markers
April 7, 2014

8-09.3(6) Recessed Pavement Marker

The following sentence is inserted after the first sentence of the first paragraph:

> The Contractor shall ensure that grinding of the pavement does not result in any damage, (e.g. chipping, spalling or raveling) to the pavement to remain.

Section 8-11, Guardrail
April 7, 2014

8-11.3(1) Beam Guardrail

After the below Amendments to Sections 8-11.3(1)F and 8-11.3(1)G are applied, this Section is supplemented with the following new sub-section:

8-11.3(1)F Removing and Resetting Beam Guardrail

The Contractor shall remove and reset existing guardrail posts, rail element, hardware and blocks to the location shown in the Plans. The mounting height of reset rail element shall be at the height shown in the Plans. The void caused by the removal of the post shall be backfilled and compacted.

The Contractor shall remove and replace any existing guardrail posts and blocks that are not suited for re-use, as staked by the Engineer. The void caused by the removal of the post shall be backfilled and compacted. The Contractor shall then furnish and install a new guardrail post to provide the necessary mounting height.

8-11.3(1)A Erection of Posts

The second paragraph in this Section is deleted.

Provided to Builders Exchange of WA, Inc. For usage Conditions Agreement see www.bxwa.com - Always Verify Scale

8-11.3(1)C Terminal and Anchor Installation

The last sentence in the last paragraph is deleted.

8-11.3(1)F Plans

This Section number is revised to:

8-11.3(1)G

8-11.3(1)G Guardrail Construction Exposed to Traffic

This Section number is revised to:

8-11.3(1)H

Section 8-18, Mailbox Support
August 4, 2014

8-18.3(1) Type 3 Mailbox Support

In the third paragraph, the first sentence is revised to read:

With the Engineer's consent, a Type 3 Mailbox Support design, made of steel or other durable material, that meets the NCHRP 350 or the Manual for Assessing Safety Hardware (MASH) crash test criteria may be used in place of the design shown in the *Standard Plans*.

Section 8-20, Illumination, Traffic Signal Systems, Intelligent Transportation Systems, and Electrical
August 3, 2015

8-20.2(1) Equipment List and Drawings

The second sentence of the second paragraph is revised to read:

Supplemental data would include such items as catalog cuts, product Specifications, Shop Drawings, wiring diagrams, etc.

The third paragraph (up until the colon) is revised to read:

If the luminaires are not listed in the Qualified Products List, the Contractor shall submit the following information for each different type of luminaire required in the Contract:

The fourth paragraph (up until the colon) is revised to read:

The Contractor shall submit for approval Type 3E Working Drawings in accordance with Section 1-05.3 for each of the following types of standards called for on this project:

The fifth paragraph is revised to read:

Provided to Builders Exchange of WA, Inc. For usage Conditions Agreement see www.bxwa.com - Always Verify Scale

The Contractor will not be required to submit Shop Drawings for approval for light standards and traffic signal standards conforming to the Pre-approved Plans listed in the Special Provisions. The Contractor may use Pre-approved Plans posted on the WSDOT website with a more current revision date than published in the Special Provisions.

8-20.3(1) General

The following six new paragraphs are inserted after the second paragraph:

If a portion of an existing communication conduit system is damaged due to the Contractor's activities, the affected system shall be restored to original condition. Conduit shall be repaired. Communication cables shall be replaced and the communication system shall be made fully operational within 24 hours of being damaged.

Damaged communication cable shall be replaced between existing termination or splice points. No additional termination or splice points will be allowed. An existing termination or splice point is defined as a location where all existing fiber strands or twisted pair wires are terminated or spliced at one point. Communication cable shall be defined as either copper twisted pair or fiber optic cables. The Contractor may use temporary splices to restore Contracting Agency communication systems until the permanent communication cable system is restored.

When damage to an existing communication system has occurred, the Contractor shall perform the following in addition to other restoration requirements:

1. Inspect the communication raceway system including locate wire or tape to determine the extent of damage.

2. Contact the Engineer for Fiber Optic Cable and Twisted Pair (TWP) Copper Cable acceptance testing requirements and communication system restoration requirements.

3. Initially perform the acceptance tests to determine the extent of damage and also perform the acceptance tests after repairs are completed. Provide written certification that the communication cable system, including the locate wire or tape, is restored to test standard requirements.

Communication cables shall be restored by Contractor personnel that are WSDOT prequalified for communication installation Work. Restoration shall be considered electrical Work when the path of the communication system interfaces with electrical systems. Electrical Work of this nature shall be performed by Contractor personnel that are WSDOT prequalified for Work on both electrical and communication systems.

If the Contractor or Subcontractors are unable or unqualified to complete the restoration Work, the Engineer may have the communication or electrical systems restored by other means and subtract the cost from the money that will be or is due the Contractor.

When field repair of existing conduit, innerduct or outerduct is required, the repair kits shall be installed per manufacturer's recommendations. Repair kits and each

Provided to Builders Exchange of WA, Inc. For usage Conditions Agreement see www.bxwa.com - Always Verify Scale

connection point between the repair kit and the existing raceway system shall be sealed to prevent air leakage during future cable installation.

8-20.3(5)B Conduit Type

This Section is revised to read:

Conduit shall be rigid polyvinyl chloride (PVC), high density polyethylene (HDPE), rigid metal or flexible metal depending on the application.

Rigid metal conduit shall be installed at the following locations:

1. Within Railroad Right of Way.

2. All surface-mounted conduit, with the exception of pole risers.

3. All runs within slip form placed concrete.

Unless otherwise required by the owning utility:

1. Service lateral runs shall be Schedule 80 PVC or Schedule 80 HDPE.

2. Pole risers shall be Schedule 80 PVC.

Conduit runs, including outer-duct, that enter the Traveled Way or Shoulders shall be Schedule 80 HDPE, Schedule 80 PVC, or rigid metal.

Conduit runs, including outer-duct, that do not enter the Traveled Way or Shoulders shall be Schedule 80 HDPE, Schedule 40 PVC or rigid metal.

Flexible metal conduit is allowed only at locations called for in the Plans.

Except as described under Non-Metallic Conduit, unless otherwise indicated in the Plans or Standard Plans, the same type of conduit shall be used for the entire length of the run, from outlet to outlet.

Innerduct shall have a smooth wall non ribbed interior surface, with factory pre-lubricated coating.

Innerduct within the Traveled Way or Shoulders and innerduct which is not factory installed shall be Schedule 40 HDPE. The innerduct shall be continuous with no splices. Innerduct which is pulled into the outer duct in the field shall be installed with an extra 2 feet of conduit beyond each end of the outer-duct and shall be allowed to finish contracting for 21 calendar days before it is terminated. Innerduct shall be terminated with end bells flush to ¼-inch out of the outer-duct and the space between the outer-duct and innerduct shall be sealed with rodent and moisture resistant foam designed for this application and installed per manufacturer's recommendations.

8-20.3(8) Wiring

The second sentence in the eleventh paragraph is revised to read:

Provided to Builders Exchange of WA, Inc. For usage Conditions Agreement see www.bxwa.com - Always Verify Scale

Every conductor at every wire termination, connector, or device shall have an approved wire marking sleeve bearing, as its legend, the circuit number indicated in the Contract.

8-20.3(13)A Light Standards

In the third paragraph, the last sentence of item number 1 is revised to read:

Conduit shall extend a maximum of 1 inch above the top of the foundation, including grounding end bushing or end bell bushing.

In the fourth paragraph, the second sentence of item number 1 is revised to read:

Conduits shall be cut to a maximum height of 2 inches above the foundation including grounding end bushing or end bell bushing.

Section 8-21, Permanent Signing
August 3, 2015

8-21.2 Materials

This Section is revised to read:

Materials shall meet the requirements of the following Sections:

Roadside Sign Structures	9-06.16
Permanent Signs	9-28
Sign Support Structures	9-28.14

The Contractor shall submit a Manufacturer's Certificate of Compliance for all permanent signs; a copy of the Manufacturer's Certificate of Compliance shall be available at the fabricator's plant. Permanent signs will be inspected at the fabricator's plant prior to shipment to the project unless otherwise accepted by the Engineer. Signs without an approved decal shall not be installed on the project with the exception of double-faced signs which do not receive decals or fabricator's stickers.

8-21.3(9)F Foundations

The first sentence of the first paragraph is revised to read:

The excavation and backfill shall conform to the requirements of Section 2-09.3.

Section 8-22, Pavement Marking
April 6, 2015

8-22.3(6) Removal of Pavement Markings

The second and third sentences of the first paragraph are revised to read:

Grinding to remove pavement markings is allowed prior to application of a Bituminous Surface Treatment. Grinding to remove pavement marking from hot mix asphalt and cement concrete pavements is allowed to a depth just above the pavement surface,

Provided to Builders Exchange of WA, Inc. For usage Conditions Agreement see www.bxwa.com - Always Verify Scale

then water blasting or shot blasting shall be required to remove the remaining markings.

Section 8-23, Temporary Pavement Markings
January 5, 2015

This Section's content is deleted in its entirety and replaced with the following new sub-sections:

8-23.1 Description

The Work consists of furnishing, installing, and removing temporary pavement markings. Temporary pavement markings shall be provided where noted in the Plans; for all lane shifts and detours resulting from construction activities; or when permanent markings are removed because of construction operations.

8-23.2 Materials

Materials for temporary markings shall be paint, plastic, tape, raised pavement markers or flexible raised pavement markers. Materials for pavement markings shall meet the following requirements:

Raised Pavement Markers	9-21
Temporary Marking Paint	9-34.2(6)
Plastic	9-34.3
Glass Beads for Pavement Marking Materials	9-34.4
Temporary Pavement Marking Tape	9-34.5
Temporary Flexible Raised Pavement Markers	9-34.6

8.23.3 Construction Requirements

8-23.3(1) General

The Contractor shall select the type of pavement marking material in accordance with the Contract.

8-23.3(2) Preliminary Spotting

All preliminary layout and marking in preparation for application or removal of temporary pavement markings shall be the responsibility of the Contractor.

8-23.3(3) Preparation of Roadway Surface

Surface preparation for temporary pavement markings shall be in accordance with the manufacturer's recommendations.

8-23.3(4) Pavement Marking Application

8-23.3(4)A Temporary Pavement Markings – Short Duration

Temporary pavement markings – short duration shall meet the following requirements:

Temporary Center Line – A BROKEN line used to delineate adjacent lanes of traffic moving in opposite directions. The broken pattern shall be based on a 40-foot unit, consisting of a 4-foot line with a 36-foot gap

Provided to Builders Exchange of WA, Inc. For usage Conditions Agreement see www.bxwa.com - Always Verify Scale

if paint or tape is used. If temporary raised pavement markers are used, the pattern shall be based on a 40-foot unit, consisting of a grouping of three temporary raised pavement markers, each spaced 3 feet apart, with a 34 foot gap.

Temporary Edge Line – A SOLID line used on the edges of Traveled Way. The line shall be continuous if paint or tape is used. If temporary raised pavement markers are used, the line shall consist of markers installed continuously at 5-foot spacing.

Temporary Lane Line – A BROKEN line used to delineate adjacent lanes with traffic traveling in the same direction. The broken pattern shall be based on a 40-foot unit, consisting of a 4-foot line with a 36-foot gap, if paint or tape is used. If temporary raised pavement markers are used, the pattern shall be based on a 40-foot unit, consisting of a grouping of three temporary raised pavement markers, each spaced 3 feet apart, with a 34 foot gap.

Lane line and right edge line shall be white in color. Center line and left edge line shall be yellow in color. Edge lines shall be installed only if specifically required in the Contract. All temporary pavement markings shall be retroreflective.

8-23.3(4)A1 Temporary Pavement Marking Paint

Paint used for short duration temporary pavement markings shall be applied in one application at a thickness of 15 mils or 108 square feet per gallon. Glass beads shall be in accordance with Section 8-22.3(3)G.

8-23.3(4)A2 Temporary Pavement Marking Tape

Application of temporary pavement marking tape shall be in conformance with the manufacturer's recommendations.

Black mask pavement marking tape shall mask the existing line in its entirety.

8-23.3(4)A3 Temporary Raised Pavement Markers

Temporary raised pavement markers are not allowed on bituminous surface treatments.

8-23.3(4)A4 Temporary Flexible Raised Pavement Markers

Flexible raised pavement markers are required for new applications of bituminous surface treatments. Flexible raised pavement markers are not allowed on other pavement types unless otherwise specified or approved by the Engineer. Flexible raised pavement markers shall be installed with the protective cover in place. The cover shall be removed immediately after spraying asphaltic material.

8-23.3(4)B Temporary Pavement Markings – Long Duration

Application of paint, pavement marking tape and plastic for long duration pavement markings shall meet the requirements of Section 8-22.3(3);

Provided to Builders Exchange of WA, Inc. For usage Conditions Agreement see www.bxwa.com - Always Verify Scale

application of raised pavement markers shall meet the requirements of Section 8-09.3; and application of flexible pavement markings shall be in conformance with the manufacturer's recommendations.

8-23.3(4)C Tolerance for Lines

Tolerance for lines shall conform to Section 8-22.3(4).

8-23.3(4)D Maintenance of Pavement Markings

Temporary pavement markings shall be maintained in serviceable condition throughout the project until permanent pavement markings are installed. As directed by the Engineer; temporary pavement markings that are damaged, including normal wear by traffic, shall be repaired or replaced immediately. Repaired and replaced pavement markings shall meet the requirements for the original pavement marking.

8-23.3(4)E Removal of Pavement Markings

Removal of temporary paint is not required prior to paving; all other temporary pavement markings shall be removed.

All temporary pavement markings that are required on the wearing course prior to construction of permanent pavement markings and are not a part of the permanent markings shall be completely removed concurrent with or immediately subsequent to the construction of the permanent pavement markings. Temporary flexible raised pavement markers on bituminous surface treatment pavements shall be cut off flush with the surface if their location conflicts with the alignment of the permanent pavement markings. All other temporary pavement markings shall be removed in accordance with Section 8-22.3(6).

All damage to the permanent Work caused by removing temporary pavement markings shall be repaired by the Contractor at no additional cost to the Contracting Agency.

8-23.4 Measurement

Temporary pavement markings will be measured by the linear foot of each installed line or grouping of markers, with no deduction for gaps in the line or markers and no additional measurement for the second application of paint required for long duration paint lines. Short duration and long duration temporary pavement markings will be measured for the initial installation only.

8-23.5 Payment

Payment will be made in accordance with Section 1-04.1, for each of the following Bid items that are included in the Proposal:

"Temporary Pavement Marking – Short Duration", per linear foot.

"Temporary Pavement Marking – Long Duration", per linear foot.

Provided to Builders Exchange of WA, Inc. For usage Conditions Agreement see www.bxwa.com - Always Verify Scale

The unit Contract price per linear foot for "Temporary Pavement Marking – Short Duration" and "Temporary Pavement Marking – Long Duration" shall be full pay for all Work.

Section 9-01, Portland Cement
January 5, 2015

9-01.2(3) Low Alkali Cement

This Section is revised to read:

When low alkali Portland cement is required, the percentage of alkalies in the cement shall not exceed 0.60 percent by weight calculated as Na_20 plus 0.658 K_20. This limitation shall apply to all types of Portland cement.

9-01.2(4) Blended Hydraulic Cement

The first paragraph is revised to read:

Blended hydraulic cement shall be either Type IP(X)(MS) or Type IS(X)(MS) cement conforming to AASHTO M 240 or ASTM C 595, except that the portland cement used to produce blended hydraulic cement shall not contain more than 0.75 percent alkalies by weight calculated as Na_20 plus 0.658 K_20 and shall meet the following additional requirements:

1. Type IP(X)(MS) - Portland-Pozzolan Cement where (X) equals the targeted percentage of fly ash, the fly ash is limited to a maximum of 35 percent by weight of the cementitious material; (MS) indicates moderate sulfate resistance.

2. Type IS(X)(MS) - Portland Blast- Furnace Slag Cement, where: (X) equals the targeted percentage of ground granulated blast-furnace slag, the ground granulated blast furnace slag is limited to a maximum of 50 percent by weight of the cementitious material; (MS) indicates moderate sulfate resistance.

The first sentence of the second paragraph is revised to read:

The source and weight of the fly ash or ground granulated blast-furnace slag shall be certified on the cement mill test report or cement certificate of analysis and shall be reported as a percent by weight of the total cementitious material.

9-01.3 Tests and Acceptance

The first paragraph is revised to read:

Cement may be accepted by the Engineer based on the cement mill test report number or cement certificate of analysis number indicating full conformance to the Specifications. All shipments of the cement to the Contractor or concrete supplier shall identify the applicable cement mill test report number or cement certificate of analysis number and shall be provided by the Contractor or concrete supplier with all concrete deliveries.

Provided to Builders Exchange of WA, Inc. For usage Conditions Agreement see www.bxwa.com - Always Verify Scale

The second paragraph is revised to read:

Cement producers/suppliers that certify Portland cement or blended cement shall participate in the Cement Acceptance Program as described in WSDOT Standard Practice QC 1.

9-01.4 Storage on the Work Site

This Section is revised to read:

At the request of the Engineer, the Contractor shall provide test data to show that cement stored on site for longer than 60 days meets the requirements of 9-01. Tests shall be conducted on samples taken from the site in the presence of the Engineer. Test results that meet the requirements of 9-01 shall be valid for 60 days from the date of sampling, after which the Engineer may require further testing.

Section 9-02, Bituminous Materials
April 6, 2015

9-02.1(4) Performance Graded Asphalt Binder (PGAB)

The first paragraph is supplemented with the following:

For HMA with greater than 20 percent RAP by total weight of HMA or any amount of RAS the new asphalt binder, recycling agent and recovered asphalt (RAP and/or RAS) when blended in the proportions of the mix design shall meet the PGAB requirements of AASHTO M 320 Table 1 for the grade of asphalt binder specified by the Contract.

This Section is supplemented with the following:

The recycling agent used to rejuvenate the recovered asphalt from recycled asphalt pavement (RAP) and reclaimed asphalt shingles (RAS) shall meet the Specifications in Table 1:

Table 1		RA 1		RA 5		RA 25	
Test	**ASTM Test Method**	**Min.**	**Max.**	**Min.**	**Max.**	**Min.**	**Max.**
Viscosity @ 140˚F cSt	D2170 or D2171	50	150	200	800	1000	4000
Flashpoint COC, ˚F	D92	400		400		400	
Saturates, Wt. %	D2007		30		30		30
Specific Gravity	D70 or D2198	Report		Report		Report	
Tests on Residue from RTFC	D2872						
Viscosity Ratio[1]			3		3		3

Provided to Builders Exchange of WA, Inc. For usage Conditions Agreement see www.bxwa.com - Always Verify Scale

Mass Change ± %			4		4		4
[1]Viscosity Ratio = RTFC Viscosity @ 140˚F, cSt / Original Viscosity @ 140˚F, cSt							

9-02.1(6)A Polymerized Cationic Emulsified Asphalt CRS-2P

In the ninth row of the table, "Test" is revised to read "Tests".

The eleventh row in the table is revised to read:

Elastic Recovery %	T 301[2]	50	

The last two rows of the table are deleted.

Footnote 2 below the table is revised to read:

2 The residue material for T 301 shall come from the modified distillation per note 1.

Footnote 3 below the table is deleted.

The last paragraph is deleted.

Section 9-03, Aggregates
August 3, 2015

9-03.1(2)C Use of Substandard Gradings

This Sectionm, including title, is deleted in its entirety and replaced with the following:

Vacant

9-03.1(4)C Grading

In the second paragraph, the first sentence is deleted.

The third paragraph is deleted.

9-03.1(5)B Grading

The last paragraph is revised to read:

The Contracting Agency may sample each aggregate component prior to introduction to the weigh batcher or as otherwise determined by the Engineer. Each component will be sieve analyzed separately in accordance with WSDOT FOP for WAQTC/AASHTO Test Method T-27/11. All aggregate components will be mathematically re-combined by the proportions (percent of total aggregate by weight) provided by the Contractor on Concrete Mix Design Form 350-040.

9-03.8(1) General Requirements

The first paragraph up until the colon is revised to read:

Provided to Builders Exchange of WA, Inc. For usage Conditions Agreement see www.bxwa.com - Always Verify Scale

Preliminary testing of aggregates for source approval shall meet the following test requirements:

The list in the first paragraph is supplemented with the following:

Sand Equivalent 45 min.

The following new paragraph is inserted after the first paragraph:

Aggregate sources that have 100 percent of the mineral material passing the No. 4 sieve shall be limited to no more than 5 percent of the total weight of aggregate.

9-03.8(2) HMA Test Requirements

The second paragraph (up until the colon) is revised to read:

The mix design shall produce HMA mixtures when combined with RAP, RAS, coarse and fine aggregate within the limits set forth in Section 9-03.8(6) and mixed in the laboratory with the designated grade of asphalt binder, using the Superpave gyratory compactor in accordance with WSDOT FOP for AASHTO T 312, and at the required gyrations for N initial, N design, and N maximum with the following properties:

The third paragraph is revised to read:

The mix criteria for Hamburg Wheel-Track Testing and Indirect Tensile Strength do not apply to HMA accepted by commercial evaluation.

9-03.8(3)B Gradation – Recycled Asphalt Pavement and Mineral Aggregate

This Section is supplemented with the following:

For HMA with greater than 20 percent RAP by total weight of HMA the RAP shall be processed to ensure that 100 percent of the material passes a sieve twice the size of the maximum aggregate size for the class of mix to be produced.

When any amount of RAS is used in the production of HMA the RAS shall be milled, crushed or processed to ensure that 100 percent of the material passes the ½ inch sieve. Extraneous materials in RAS such as metals, glass, rubber, soil, brick, tars, paper, wood and plastic shall not exceed 2.0 percent by mass as determined on material retained on the No. 4 sieve.

9-03.14(3) Common Borrow

This Section is revised to read:

Material for common borrow shall consist of granular or nongranular soil and/or aggregate which is free of deleterious material. Deleterious material includes wood, organic waste, coal, charcoal, or any other extraneous or objectionable material. The material shall not contain more than 3 percent organic material by weight. The plasticity index shall be determined using test method AASHTO T 89 and AASHTO T 90.

Provided to Builders Exchange of WA, Inc. For usage Conditions Agreement see www.bxwa.com - Always Verify Scale

The material shall meet one of the options in the soil plasticity table below.

Soil Plasticity Table

Option	Sieve	Percent Passing	Plasticity Index
1	No. 200	0 - 12	N/A
2	No. 200	12.1 - 35	6 or Less
3	No. 200	Above 35	0

All percentages are by weight.

If requested by the Contractor, the plasticity index may be increased with the approval of the Engineer.

9-03.14(4) Gravel Borrow for Structural Earth Wall

In the second table, the row beginning with "pH" is revised to read:

pH	WSDOT Test Method T 417	4.5 - 9	5 – 10

9-03.21(1) General Requirements

The following new paragraph is inserted after the second paragraph:

Reclaimed asphalt shingles samples shall contain less than the maximum percentage of asbestos fibers based on testing procedures and frequencies established in conjunction with the specifying jurisdiction and State or Federal environmental regulatory agencies.

9-03.21(1)B Vacant

This Section, including title, is revised to read:

9-03.21(1)B Concrete Rubble

Concrete rubble shall not be placed below the ordinary high water mark of any water of the State.

9-03.21(1)D Recycled Steel Furnace Slag

This Section is supplemented with the following new sentence:

Recycled steel furnace slag shall not be placed below the ordinary high water mark of any water of the State.

9-03.21(1)E Table on Maximum Allowable Percent (By Weight) of Recycled Material

In the table, the "Concrete Rubble" value for the item "Gravel Backfill for Drains" is revised to read "0".

Provided to Builders Exchange of WA, Inc. For usage Conditions Agreement see www.bxwa.com - Always Verify Scale

In the table, the “Concrete Rubble” value for the item "Backfill for Sand Drains" is revised to read “0”.

In the table, the “Concrete Rubble” value for the item "Sand Drainage Blanket" is revised to read “0”.

Section 9-04, Joint and Crack Sealing Materials
August 3, 2015

9-04.1(4) Elastomeric Expansion Joint Seals
In this Section, “AASHTO M 220” is revised to read “ASTM D 2628”.

9-04.2 Joint Sealants
In the first paragraph, “AASHTO M 324” is revised to read “ASTM D 6690”.

9-04.2(2) Poured Rubber Joint Sealer
In item number 9, “WSDOT Test Method No. 412” is revised to read “ASTM D 5329”.

9-04.2(3) Polyurethane Sealant
The first paragraph is revised to read:

> Polyurethane sealant shall conform to ASTM C 920 Type S Grade NS Class 25 Use M or ASTM C 920 Type S Grade NS Class 35 Use M.

Section 9-05, Drainage Structures and Culverts
April 7, 2014

9-05.13 Ductile Iron Sewer Pipe
The first paragraph is deleted.

Section 9-06, Structural Steel and Related Materials
January 5, 2015

9-06.5(4) Anchor Bolts
The third sentence of the second paragraph is revised to read:

> Nuts for ASTM F 1554 Grade 36 or 55 black or galvanized anchor bolts shall conform to ASTM A 563, Grade A or DH.

Section 9-07, Reinforcing Steel
August 3, 2015

9-07.2 Deformed Steel Bars
The first sentence is revised to read:

> Deformed steel bars for concrete reinforcement shall conform to either AASHTO M 31 Grade 60 or ASTM A 706 Grade 60, except as otherwise noted in this Section or as shown in the Plans.

This Section is supplemented with the following new sub-section:

Provided to Builders Exchange of WA, Inc. For usage Conditions Agreement see www.bxwa.com - Always Verify Scale

9-07.2(1) Headed Steel Reinforcing Bar

Headed steel reinforcing bars shall conform to Section 9-07.2 and ASTM A 970, including Annex A1 requirements for Class HA head dimensions. Headed steel reinforcing bars shall be forged headed bars or threaded headed bars.

9-07.5(1) Epoxy-Coated Dowel Bars (for Cement Concrete Pavement Rehabilitation)

This Section is revised to read:

Epoxy-coated dowel bars shall be round plain steel bars of the dimensions shown in the Standard Plans. They shall conform to AASHTO M 31, Grade 60 or ASTM A 615, Grade 60 and shall be coated in accordance with ASTM A 1078 Type 2 coating, except that the bars may be cut to length after being coated. Cut ends shall be coated in accordance with ASTM A 1078 with a patching material that is compatible with the coating, inert in concrete and recommended by the coating manufacturer. The thickness of the epoxy coating shall be 10 mils plus or minus 2 mils. The Contractor shall furnish a written certification that properly identifies the coating material, the number of each batch of coating material used, quantity represented, date of manufacture, name and address of manufacturer, and a statement that the supplied coating material meets the requirements of ASTM A 1078 Type 2 coating. Patching material, compatible with the coating material and inert in concrete and recommended by the manufacturer shall be supplied with each shipment for field repairs by the Contractor.

9-07.5(2) Corrosion Resistant Dowel Bars (for Cement Concrete Pavement)

This Section's title is revised to read:

9-07.5(2) Corrosion Resistant Dowel Bars (for Cement Concrete Pavement and Cement Concrete Pavement Rehabilitation)

Section 9-08, Paints and Related Materials
January 5, 2015

9-08.1(2)H Top Coat, Single Component, Moisture-Cured Polyurethane

The second paragraph is revised to read:

Color and Gloss: As specified in the Plans or Special Provisions

The last item in the requirements list is revised to read:

The top coat shall be a gloss or semi-gloss

9-08.1(8) Standard Colors

The second paragraph is deleted.

The third paragraph is revised to read:

Provided to Builders Exchange of WA, Inc. For usage Conditions Agreement see www.bxwa.com - Always Verify Scale

Unless otherwise specified, all top or finish coats shall be gloss or semi-gloss, with the paint falling within the range of greater than 70 for gloss and 35 to 70 for semi-gloss on the 60-degree gloss meter.

Section 9-09, Timber and Lumber
January 6, 2014

9-09.3(1) General Requirements

The fourth paragraph is revised to read:

All orders of treated timber and lumber shall be accompanied by a Certificate of Treatment record. The Certificate of Treatment showing conformance to this Specification and AWPA standards shall include the following information:

Name and location of the wood preserving company,
Customer identification,
Date of treatment and charge number,
Type of chemical used and amount of retention,
Treating process and identification of the Specification used,
Boring records verifying treatment penetration for timber and lumber with a nominal dimension of 6" x 6" or larger,
Description of material that was treated, and
Signature of a responsible plant official.

The fifth paragraph is deleted.

The first sentence in the last paragraph is revised to read:

All timber and lumber to be used in aquatic environments, unless specified otherwise in the Contract, shall be chemically treated using Western Wood Preservers Institute Best Management Practices (BMPs).

Section 9-10, Piling
August 3, 2015

9-10.2(1) Concrete

The first paragraph is deleted.

The first sentence of the second paragraph is deleted.

9-10.5 Steel Piling

This Section is revised to read:

The material for rolled steel piling H-piling and pile splices shall conform to ASTM A 36, ASTM A 572 or ASTM A 992. The material for steel pipe piling and splices shall conform to one of the following requirements except as specifically noted in the Plans:

1. API 5L Grade X42 or X52 material may be used for longitudinal seam welded or helical (spiral) seam submerged-arc welded pipe piles of any diameter.

Provided to Builders Exchange of WA, Inc. For usage Conditions Agreement see www.bxwa.com - Always Verify Scale

2. ASTM A 252 Grade 2 or 3 material may be used for longitudinal seam welded or helical (spiral) seam submerged-arc welded pipe piles of any diameter. For the purposes of welding and prequalification of base metal, steel pipe pile designated as ASTM A 252 may be treated as prequalified provided the chemical composition conforms to a prequalified base metal classification listed in Table 3.1 of the AWS D1.1/D1.1M, latest edition, Structural Welding Code, the grade of pipe piling meets or exceeds the grade specified in the Plans, and the carbon equivalent (CE) is a maximum of 0.45-percent.

3. ASTM A 572 or ASTM A 588 material may be used for longitudinal seam welded piles of any diameter.

For helical (spiral) seam submerged-arc welded pipe piles, the maximum radial offset of strip/plate edges shall be 1/8 inch. The offset shall be transitioned with a taper weld and the slope shall not be less than a 1 in 2.5 taper. The weld reinforcement shall not be greater than 3/16 inches and misalignment of weld beads shall not exceed 1/8 inch.

Steel soldier piles, and associated steel bars and plates, shall conform to ASTM A 36, ASTM A 572 or ASTM A 992, except as otherwise noted in the Plans.

All steel piling may be accepted by the Engineer based on the Manufacturer's Certificate of Compliance submitted in accordance with Section 1-06.3. The manufacturer's certificate of compliance submittal for steel pipe piles shall be accompanied by certified mill test reports, including chemical analysis and carbon equivalence, for each heat of steel used to fabricate the steel pipe piling.

Section 9-13, Riprap, Quarry Spalls, Slope Protection, and Rock for Erosion and Scour Protection and Rock Walls
January 5, 2015

This Section's content is deleted.

9-13.1 Loose Riprap

This Section's content, including title and subsections, is revised to read the following:

9-13.1 Riprap and Quarry Spalls

9-13.1(1) General

Riprap and quarry spalls shall consist of broken stone or broken concrete rubble and shall be free of rock fines, soil, or other extraneous material. Concrete rubble shall not be contaminated by foreign materials such as fibers, wood, steel, asphalt, sealant, soil, plastic and other contaminants or deleterious material. Concrete rubble that is imported to the job site will require testing and certification for toxicity characteristics per Section 9-03.21(1).

The grading of the riprap shall be determined by the Engineer by visual inspection of the load before it is dumped into place, or, if so ordered by the

Provided to Builders Exchange of WA, Inc. For usage Conditions Agreement see www.bxwa.com - Always Verify Scale

Engineer, by dumping individual loads on a flat surface and sorting and measuring the individual rocks contained in the load. Should the riprap contain insufficient spalls, as defined in Section 9-13.1(5), the Contractor shall furnish and place supplementary spall material.

Riprap and quarry spalls shall be free from segregation, seams, cracks, and other defects tending to destroy its resistance to weather and shall conform to the following requirements for quality.

Aggregate Property	Test Method	Requirement
Degradation Factor	WSDOT T 113	15 minimum
Los Angeles Wear, 500 Rev.	AASHTO T 96	50% maximum
Specific Gravity, SSD	AASHTO T 85	2.55 minimum

9-13.1(2) Heavy Loose Riprap

Heavy loose riprap shall meet the following requirements for grading:

	Minimum Size	Maximum Size
40% to 90%	1 ton (½ cubic yd.)	
70% to 90%	300 lbs. (2 cu. ft.)	
10% to 30%	3 inch	50 lbs. (spalls)

9-13.1(3) Light Loose Riprap

Light loose riprap shall meet the following requirements for grading:

	Size Range	Maximum Size
20% to 90%	300 lbs. to 1 ton (2 cu. ft. to ½ cu. yd.)	
15% to 80%	50 lbs. to 1 ton (⅓ cu. ft. to ½ cu. yd.)	
10% to 20%	3 inch	50 lbs. (spalls)

9-13.1(4) Hand Placed Riprap

Hand placed riprap shall be as nearly rectangular as possible, 60 percent shall have a volume of not less than 1 cubic foot. No stone shall be used which is less than 6 inches thick, nor which does not extend through the wall.

9-13.1(5) Quarry Spalls

Quarry spalls shall meet the following requirements for grading:

Sieve Size	Percent Passing
8″	100
3″	40 max.
¾″	10 max.

9-13.2 Hand Placed Riprap

This Section, including title, is deleted in its entirety and replaced with the following:

Provided to Builders Exchange of WA, Inc. For usage Conditions Agreement see www.bxwa.com - Always Verify Scale

9-13.2 Vacant

9-13.4 Rock for Erosion Control and Scour Protection

The last sentence is revised to read:

The use of recycled materials and concrete rubble is not permitted for this application.

9-13.6 Quarry Spalls

This Section, including title, is deleted in its entirety and replaced with the following:

9-13.6 Vacant

Section 9-14, Erosion Control and Roadside Planting
August 3, 2015

9.14.1 Soil

This Section, including title, is revised to read:

9-14.1 Topsoil

Topsoil shall not contain any recycled material, foreign materials, or any listed Noxious and Nuisance weeds of any Class designated by authorized State or County officials. Aggregate shall not comprise more than 10% by volume of Topsoil and shall not be greater than two inches in diameter.

9-14.1(2) Topsoil Type B

The last sentence of the second paragraph is deleted.

9-14.2 Seed

This Section is revised to read:

Seed of the type specified shall be certified in accordance with WAC 16-302. Seed mixes shall be commercially prepared and supplied in sealed containers. The labels shall show:

(1) Common and botanical names of seed

(2) Lot number

(3) Net weight

(4) Pounds of Pure live seed (PLS) in the mix

(5) Origin of seed

All seed vendors must have a business license issued by supplier's State or Provincial Department of Licensing with a "seed dealer" endorsement.

9-14.4 Erosion Control and Roadside Planting

This Section is supplemented with the following new sub-section:

Provided to Builders Exchange of WA, Inc. For usage Conditions Agreement see www.bxwa.com - Always Verify Scale

9-14.4(9) Horticultural Grade Perlite

Horticultural grade perlite shall be in a pelletized or granular form.

Horticultural grade perlite shall meet the following requirements for quality and grading:

Quality Requirements		
Property	**Test Method** [Note 1]	**Requirement**
pH (of water slurry)	PI 202	6.5 – 8.0
Bulk Density, lb/ft^3	PI 200	2 - 10

Note 1 – PI, abbreviation for the Perlite Institute

Gradation Requirements	
Sieve Size	**Percent Passing**
No .4	99 – 100
No. 18	30 max
No. 30	10 max

All percentages are by weight.

9-14.4(3) Bark or Wood Chips

This Section's title is revised to read:

Bark or Wood Chip Mulch

The first paragraph is revised to read:

Bark or wood chip mulch shall be derived from fir, pine, or hemlock species. It shall not contain resin, tannin, or other compounds in quantities that would be detrimental to plant life. Sawdust shall not be used as mulch. Mulch produced from finished wood products or construction debris will not be allowed.

9-14.4(5) Lime

This Section, including title, is revised to read:

9-14.4(5) Agricultural Grade Dolomite Lime

Agricultural grade dolomite lime shall be in a pelletized or granular form, meeting the grading requirements of ASTM C 602 for Class E.

9-14.4(6) Gypsum

This Section, including title, is revised to read:

9-14.4(6) Agricultural Grade Gypsum

Agricultural grade gypsum shall consist of Calcium Sulfate ($CaSO_4 \cdot 2H_2O$) in a pelletized or granular form and shall meet the following grading requirements:

Sieve Size	Percent Passing
¼"	99 – 100
No. 20	20 max

All percentages are by weight.

Provided to Builders Exchange of WA, Inc. For usage Conditions Agreement see www.bxwa.com - Always Verify Scale

9-14.4(7) Tackifier

This Section is revised to read:

Tackifiers are used as a tie-down for soil, compost, seed, and/or mulch. Tackifiers shall contain no growth or germination-inhibiting materials and shall not reduce infiltration rates. Tackifiers shall hydrate in water and readily blend with other slurry materials.

The Contractor shall provide test results documenting the tackifier meets the requirements for Acute Toxicity, Solvents, and Heavy Metals as required in Table 1 in Section 9-14.4(2). The tests shall be performed at the manufacturer's recommended application rate.

9-14.4(8) Compost

The second paragraph is revised to read:

Compost production and quality shall comply with WAC 173-350.

9-14.4(8)A Compost Submittal Requirements

Item 2 is revised to read:

2. A copy of the Solid Waste Handling Permit issued to the manufacturer by the Jurisdictional Health Department in accordance with WAC 173-350 (Minimum Functional Standards for Solid Waste Handling).

9-14.6(1) Description

Item number 3 in the fourth paragraph is revised to read:

3. Live pole cuttings shall have a diameter between 2 inches and 3.5 inches. Live poles shall have no more than three branches which must be located at the top end of the pole and those branches shall be pruned back to the first bud from the main stem.

9-14.6(2) Quality

The second and third paragraphs in this Section are revised to read:

All plant material shall comply with State and Federal laws with respect to inspection for plant diseases and insect infestation. Plants must meet Washington State Department of Agriculture plant quarantines and have a certificate of inspection. Plants originating in Canada must be accompanied by a phytosanitary certificate stating the plants meet USDA health requirements.

All plant material shall be purchased from a nursery licensed to sell plants in their State or Province.

Provided to Builders Exchange of WA, Inc. For usage Conditions Agreement see www.bxwa.com - Always Verify Scale

Section 9-15, Irrigation System
August 4, 2014

9-15.18 Detectable Marking Tape
In the second paragraph, the table is supplemented with the following new row:

Non-Potable Water	Purple

Section 9-16, Fence and Guardrail
August 4, 2014

9-16.2(1)B Wood Fence Posts and Braces
In the table, the row beginning with "ACA" is deleted.

Section 9-19, Prestressed Concrete Girders
August 3, 2015

This Section, including title, is deleted in its entirety and replaced with the following:

Vacant

Section 9-29, Illumination, Signal, Electrical
August 3, 2015

9-29.1 Conduit, Innerduct, and Outerduct
This Section is supplemented with the following new subsection:

9-29.1(9) Repair
Manufacturer repair kits shall be used for field repair of existing conduit, innerduct and outerduct. The conduit repair kit shall be manufactured specifically for the repair of existing damaged conduit, inner duct and outer duct. The repair kit shall be prepackaged and include the split conduit and split couplings necessary to restore the damaged conduit to the original inside dimensions including a water and air tight seal.

9-29.2(1)B Heavy Duty Junction Boxes
The second paragraph is revised to read:

The Heavy-Duty Junction Box steel frame, lid support and lid fabricated from steel plate and shapes shall be painted with a shop applied, inorganic zinc primer in accordance with Section 6-07.3. Ductile iron and gray iron castings shall not be painted.

The following new paragraph is inserted after the second paragraph:

The concrete used in Heavy-Duty Junction Boxes shall have a minimum compressive strength of 4,000 psi.

In the fourth paragraph (after the preceding Amendment is applied), the table is revised to read:

Provided to Builders Exchange of WA, Inc. For usage Conditions Agreement see www.bxwa.com - Always Verify Scale

Materials	Requirement
Concrete	Section 6-02
Reinforcing Steel	Section 9-07
Lid	ASTM A 786 diamond plate steel, rolled from plate complying with ASTM A 572, grade 50 or ASTM A 588, and having a min. CVN toughness of 20 ft-lb at 40°F. Or Ductile iron casting meeting Section 9-05.15
Frame and stiffener plates	ASTM A 572 grade 50 or ASTM A 588, both with min. CVN toughness of 20 ft-lb at 40°F Or Gray iron casting meeting Section 9-05.15
Anchors (studs)	Section 9-06.15
Threaded Anchors for Gray Iron Frame	ASTM F1554 grade 55 Headed Anchor Requirements
Bolts, Studs, Nuts, Washers	ASTM F 593 or A 193, Type 304 or 316, or Stainless steel grade 302, 304, or 316 in accordance with approved Shop Drawings
Hinges and Locking and Latching Mechanism and associated Hardware and Bolts	In accordance with approved Shop Drawings
Safety Bars	In accordance with approved Shop Drawings

The last paragraph is revised to read:

The bearing seat and lid perimeter shall be free from burrs, dirt, and other foreign debris that would prevent solid seating. Bolts and nuts shall be liberally coated with anti-seize compound. Bolts shall be installed snug tight. The bearing seat and lid perimeter shall be machined to allow a minimum of 75 percent of the bearing areas to be seated with a tolerance of 0.0 to 0.005 inches measured with a feeler gage. The bearing area percentage will be measured for each side of the lid as it bears on the frame.

9-29.2(2) Standard Duty and Heavy-Duty Cable Vaults and Pull Boxes

This Section's title is revised to read:

Small Cable Vaults, Standard Duty Cable Vaults, Heavy-Duty Cable Vaults, Standard Duty Pull Boxes, and Heavy-Duty Pull Boxes

In the first paragraph, the first sentence is revised to read:

Small, Standard Duty and Heavy-Duty Cable Vaults and Standard Duty and Heavy-Duty Pull Boxes shall be constructed as a concrete box and as a concrete lid.

9-29.2(2)A Standard Duty Cable Vaults and Pull Boxes

This Section's title is revised to read:

Provided to Builders Exchange of WA, Inc. For usage Conditions Agreement see www.bxwa.com - Always Verify Scale

Small Cable Vaults, Standard Duty Cable Vaults, and Standard Duty Pull Boxes

The first paragraph is revised to read:

Small and Standard Duty Cable Vaults and Standard Duty Pull boxes shall be concrete and have a minimum load rating of 22,500 pounds and be tested in accordance with Section 9-29.2(1)C for concrete Standard Duty Junction Boxes.

In the second paragraph, the first sentence is revised to read:

Concrete for Small and Standard Duty Cable Vaults and Standard Duty Pull Boxes shall have a minimum compressive strength of 4,000 psi.

In the third paragraph, the first sentence is revised to read:

All Small and Standard Duty Cable Vaults and Standard Duty Pull Boxes placed in sidewalks, walkways, and shared-use paths shall have slip-resistant surfaces.

The fourth paragraph (up until the colon) is revised to read:

Materials for Small and Standard Duty Cable Vaults and Standard Duty Pull Boxes shall conform to the following:

9-29.3 Fiber Optic Cable, Electrical Conductors, and Cable

This Section is supplemented with the following new subsection:

9-29.3(3) Wire Marking Sleeves

Wire marking sleeves shall be full-circle in design, non-adhesive, printable using an indelible ink and shall fit snugly on the wire or cable. Marking sleeves shall be made from a PVC or polyolefin, and provide permanent identification for wires and cables.

9-29.3(2)A4 Location Wire

This Section is revised to read:

Location wire shall be steel core copper clad minimum size AWG 14 insulated conductor. The insulation shall be orange High Molecular Weight High Density Polyethylene (HMHDPE).

9-29.13(2) Manufacturing Quality

This Section, including title, is revised to read:

9-29.13(2) Traffic Signal Controller Assembly Testing

Each traffic signal controller assembly shall be tested as follows. The Contractor shall:

1. Prior to shipping, arrange appointment for testing at the WSDOT Materials Laboratory.

Provided to Builders Exchange of WA, Inc. For usage Conditions Agreement see www.bxwa.com - Always Verify Scale

2. Assembly shall be defined as tightening all screws, nuts and bolts, verifying that all wiring is clear of moving parts and properly secured, installing all pluggables, connecting all cables and ensure that all Contract required documents are present, proper documentation is provided, and all equipment required by the Contract is installed.

3. The Contractor shall demonstrate that all of the functions required by the Contract perform as intended. Demonstration shall include energizing the cabinet and verifying that all 8 phases, 4 pedestrian movements and 4 overlaps (as required by the Contract Provisions) operate per Section 9-29.13. The Contractor shall place the controller in minimum recall with interval timing set at convenient value for testing purposes. Upon a satisfactory demonstration the controller assembly will then be accepted by WSDOT for testing.

4. If the assembly and acceptance for testing is not complete within 7 calendar days of delivery, the Project Engineer may authorize the return of the assembly to the Contractor, with collect freight charges to the Contractor.

5. WSDOT will test each traffic signal control assembly in accordance with the following test methods, WSDOT T 421, T 422, T 423, T 424, T 425, T 427, and T 428.

6. If the traffic signal control assembly passes all testing, the Contractor will be notified where the assembly is to be picked-up for delivery to the project. The Contractor shall pick-up the assembly within 7 calendar days of notification.

7. If the traffic signal control assembly fails testing, the Contractor has 7 calendar days to repair or replace any components that fail during the testing process at no cost to the Contracting Agency. All repairs shall be completed during normal business hours for the State Materials Lab. A failure shall be defined as a component that no longer functions as intended under the conditions required or does not meet the requirements of the Contract and is at the sole discretion of WSDOT. Once all repairs and replacement of components is complete WSDOT will retest the traffic controller as specified in step 6 and all costs for retesting will be deducted from monies due or that may become due the Contractor.

9-29.13(2)A Traffic Signal Controller Assembly Testing

This Section is deleted.

9-29.16 Vehicular Signal Heads, Displays, and Housing

The last sentence of the last paragraph is revised to read:

A 1-inch-wide strip of yellow retro-reflective, type IV prismatic sheeting, conforming to the requirements of Section 9-28.12, shall be applied around the perimeter of each backplate with the exception of installations where all sections of the display will be dark as part of normal operation such as ramp meters, hawk signals and tunnels.

Provided to Builders Exchange of WA, Inc. For usage Conditions Agreement see www.bxwa.com - Always Verify Scale

Section 9-31, Elastomeric Bearing Pads
August 4, 2014

This Section's title is revised to read:

Elastomeric Pads

9-31.1 Requirements

In the first paragraph, the word "bearing" is deleted from the first sentence.

In the first sentence of the second paragraph, the word "bearing" is deleted and replaced with "elastomeric".

In the last sentence of the second paragraph, the word "Bearing" is deleted and replaced with "Elastomeric".

In the third paragraph, the word "bearing" is deleted and replaced with the word "elastomeric".

Section 9-32, Mailbox Support
August 4, 2014

9-32.7 Type 2 Mailbox Support

The first sentence is revised to read:

> Type 2 mailbox supports shall be 2-inch 14-gage steel tube and shall meet the NCHRP 350 or the Manual for Assessing Safety Hardware (MASH) crash test criteria.

Section 9-33, Construction Geosynthetic
August 3, 2015

9-33.4(1) Geosynthetic Material Approval

This Section is revised to read:

> Geosynthetics listed in the WSDOT Qualified Products List (QPL) are approved for use. If the geosynthetics material is not listed in the current WSDOT QPL, a sample of each proposed geosynthetic shall be submitted to the State Materials Laboratory in Tumwater for evaluation. Geosynthetic material approval will be based on conformance to the applicable properties from the Tables in Section 9-33.2 or in the Standard Plans or Special Provisions. Approval/Disapproval information will be provided within 30 calendar days after the sample and required information for each geosynthetic type have been received at the State Materials Laboratory in Tumwater.
>
> The Contractor shall submit to the Engineer the following information regarding each geosynthetic material proposed for use:
>
> Manufacturer's name and current address,
> Full product name,
> Geosynthetic structure, including fiber/yarn type,

Provided to Builders Exchange of WA, Inc. For usage Conditions Agreement see www.bxwa.com - Always Verify Scale

Geosynthetic polymer type(s) (for permanent geosynthetic retaining walls, reinforced slopes, reinforced embankments, and other geosynthetic reinforcement applications),
Geosynthetic roll number(s),
Geosynthetic lot number(s),
Proposed geosynthetic use(s), and
Certified test results for minimum average roll values.

Geosynthetics used as reinforcement in permanent geosynthetic retaining walls, reinforced slopes, reinforced embankments, and other geosynthetic reinforcement applications require proof of compliance with the National Transportation Product Evaluation Program (NTPEP) in accordance with WSDOT Standard Practice T 925 or AASHTO Standard Practice PP 66, Standard Practice for Determination of Long-Term Strength for Geosynthetic Reinforcement.

9-33.4(3) Acceptance Samples

In the second row of the table, the value for "Application" is revised to read:

Permanent Geosynthetic Reinforced Slopes, Retaining Walls, Reinforced Embankments, and other Geosynthetic Reinforcement Applications

The fourth paragraph is supplemented with the following:

Test results from 9-33.4(1) Geosynthetic Material Approval testing may be used for acceptance provided the tested roll(s) are part of the "lot" as defined above.

Section 9-34, Pavement Marking Material
January 5, 2015

9-34.2 Paint

The second paragraph is revised to read:

Blue and black paint shall comply with the requirements of yellow paint in Section 9-34.2(4) and Section 9-34.2(5), with the exception that blue and black paints do not need to meet the requirements for titanium dioxide, directional reflectance, and contrast ratio.

9-34.4 Glass Beads for Pavement Marking Materials

In the third paragraph, the table titled "Metal Concentration Limits" is revised to read:

Metal Concentration Limits		
Element	**Test Method**	**Max. Parts Per Million (ppm)**
Arsenic	EPA 3052 SW-846 6010C	10.0
Barium	EPA 3052 SW-846 6010C	100.0
Cadmium	EPA 3052 SW-846 6010C	1.0
Chromium	EPA 3052 SW-846 6010C	5.0
Lead	EPA 3052 SW-846 6010C	50.0
Silver	EPA 3052 SW-846 6010C	5.0
Mercury	EPA 3052 SW-846 7471B	4.0

Provided to Builders Exchange of WA, Inc. For usage Conditions Agreement see www.bxwa.com - Always Verify Scale

9-34.5 Temporary Pavement Marking Tape

This Section is revised to read:

Biodegradable tape with paper backing is not allowed.

This Section is supplemented with the following new sub-sections:

9-34.5(1) Temporary Pavement Marking Tape – Short Duration

Temporary pavement marking tape for short duration shall conform to ASTM D4592 Type II except that black tape, black mask tape and the black portion of the contrast removable tape, shall be non-reflective.

9-34.5(2) Temporary Pavement Marking Tape – Long Duration

Temporary pavement marking tape for long duration shall conform to ASTM D4592 Type I. Temporary pavement marking tape for long duration, except for black tape, shall have a minimum initial coefficient of retroreflective luminance of 200 $mcd*m^{-2}*lx^{-1}$ when measured in accordance with ASTM E 2832 or ASTM E 2177. Black tape, black mask tape and the black portion of the contrast removable tape, shall be non-reflective.

9-34.6 Temporary Raised Pavement Markers

This Section's title is revised to read:

Temporary Flexible Raised Pavement Markers

The second paragraph is deleted.

Section 9-35, Temporary Traffic Control Materials
August 4, 2014

9-35.0 General Requirements

The following item is deleted from the list of temporary traffic control materials:

Barrier Drums

The last sentence of the second paragraph is revised to read:

Certification for crashworthiness according to NCHRP 350 or the Manual for Assessing Safety Hardware (MASH) will be required as described in Section 1-10.2(3).

9-35.2 Construction Signs

The first sentence is revised to read:

Construction signs shall conform to the requirements of the MUTCD and shall meet the requirements of NCHRP Report 350 for Category 2 devices or MASH.

9-35.7 Traffic Safety Drums

The third paragraph is revised to read:

Provided to Builders Exchange of WA, Inc. For usage Conditions Agreement see www.bxwa.com - Always Verify Scale

Drums and light units shall meet the crashworthiness requirements of NCHRP 350 or MASH as described in Section 1-10.2(3).

9-35.8 Barrier Drums

This Section, including title, is deleted in its entirety and replaced with the following:

9-35.8 Vacant

9-35.12 Transportable Attenuator

In the first paragraph, the fourth sentence is revised to read:

The Contractor shall provide certification that the transportable attenuator complies with NCHRP 350 Test level 3 or MASH Test Level 3 requirements.

9-35.13 Tall Channelizing Devices

In the sixth paragraph, the last sentence is revised to read:

The method of attachment must ensure that the light does not separate from the device upon impact and light units shall meet the crashworthiness requirements of NCHRP 350 or MASH as described in Section 1-10.2(3).

Provided to Builders Exchange of WA, Inc. For usage Conditions Agreement see www.bxwa.com - Always Verify Scale

VIX. APPENDICIES

Provided to Builders Exchange of WA, Inc. For usage Conditions Agreement see www.bxwa.com - Always Verify Scale

APPENDIX A

Provided to Builders Exchange of WA, Inc. For usage Conditions Agreement see www.bxwa.com - Always Verify Scale

State of Washington
Department of Labor & Industries

Prevailing Wage Section - Telephone 360-902-5335
PO Box 44540, Olympia, WA 98504-4540

Washington State Prevailing Wage

The PREVAILING WAGES listed here include both the hourly wage rate and the hourly rate of fringe benefits. On public works projects, worker's wage and benefit rates must add to not less than this total. A brief description of overtime calculation requirements are provided on the Benefit Code Key.

Journey Level Prevailing Wage Rates for the Effective Date: 3/14/2016

County	Trade	Job Classification	Wage	Holiday	Overtime	Note
King	Asbestos Abatement Workers	Journey Level	$43.95	5D	1H	
King	Boilermakers	Journey Level	$64.29	5N	1C	
King	Brick Mason	Journey Level	$52.82	5A	1M	
King	Brick Mason	Pointer-Caulker-Cleaner	$52.82	5A	1M	
King	Building Service Employees	Janitor	$22.09	5S	2F	
King	Building Service Employees	Traveling Waxer/Shampooer	$22.54	5S	2F	
King	Building Service Employees	Window Cleaner (Non-Scaffold)	$23.99	5S	2F	
King	Building Service Employees	Window Cleaner (Scaffold)	$26.78	5S	2F	
King	Cabinet Makers (In Shop)	Journey Level	$22.74		1	
King	Carpenters	Acoustical Worker	$54.02	5D	4C	
King	Carpenters	Bridge, Dock And Wharf Carpenters	$54.02	5D	4C	
King	Carpenters	Carpenter	$54.02	5D	4C	
King	Carpenters	Carpenters on Stationary Tools	$54.15	5D	4C	
King	Carpenters	Creosoted Material	$54.12	5D	4C	
King	Carpenters	Floor Finisher	$54.02	5D	4C	
King	Carpenters	Floor Layer	$54.02	5D	4C	
King	Carpenters	Scaffold Erector	$54.02	5D	4C	
King	Cement Masons	Journey Level	$53.95	7A	1M	
King	Divers & Tenders	Diver	$107.22	5D	4C	8A
King	Divers & Tenders	Diver On Standby	$64.42	5D	4C	
King	Divers & Tenders	Diver Tender	$58.33	5D	4C	
King	Divers & Tenders	Surface Rcv & Rov Operator	$58.33	5D	4C	
King	Divers & Tenders	Surface Rcv & Rov Operator Tender	$54.27	5A	4C	
King	Dredge Workers	Assistant Engineer	$56.44	5D	3F	
King	Dredge Workers	Assistant Mate (Deckhand)	$56.00	5D	3F	
King	Dredge Workers	Boatmen	$56.44	5D	3F	
King	Dredge Workers	Engineer Welder	$57.51	5D	3F	
King	Dredge Workers	Leverman, Hydraulic	$58.67	5D	3F	

Provided to Builders Exchange of WA, Inc. For usage Conditions Agreement see www.bxwa.com - Always Verify Scope

King	Dredge Workers	Mates	$56.44	5D	3F	
King	Dredge Workers	Oiler	$56.00	5D	3F	
King	Drywall Applicator	Journey Level	$54.02	5D	1H	
King	Drywall Tapers	Journey Level	$54.07	5P	1E	
King	Electrical Fixture Maintenance Workers	Journey Level	$27.24	5L	1E	
King	Electricians - Inside	Cable Splicer	$69.77	7C	4E	
King	Electricians - Inside	Cable Splicer (tunnel)	$74.95	7C	4E	
King	Electricians - Inside	Certified Welder	$67.41	7C	4E	
King	Electricians - Inside	Certified Welder (tunnel)	$72.37	7C	4E	
King	Electricians - Inside	Construction Stock Person	$37.94	7C	4E	
King	Electricians - Inside	Journey Level	$65.05	7C	4E	
King	Electricians - Inside	Journey Level (tunnel)	$69.77	7C	4E	
King	Electricians - Motor Shop	Craftsman	$15.37		1	
King	Electricians - Motor Shop	Journey Level	$14.69		1	
King	Electricians - Powerline Construction	Cable Splicer	$74.92	5A	4D	
King	Electricians - Powerline Construction	Certified Line Welder	$65.71	5A	4D	
King	Electricians - Powerline Construction	Groundperson	$44.12	5A	4D	
King	Electricians - Powerline Construction	Heavy Line Equipment Operator	$65.71	5A	4D	
King	Electricians - Powerline Construction	Journey Level Lineperson	$65.71	5A	4D	
King	Electricians - Powerline Construction	Line Equipment Operator	$55.34	5A	4D	
King	Electricians - Powerline Construction	Pole Sprayer	$65.71	5A	4D	
King	Electricians - Powerline Construction	Powderperson	$49.16	5A	4D	
King	Electronic Technicians	Journey Level	$31.00		1	
King	Elevator Constructors	Mechanic	$85.45	7D	4A	
King	Elevator Constructors	Mechanic In Charge	$92.35	7D	4A	
King	Fabricated Precast Concrete Products	All Classifications - In-Factory Work Only	$16.55	5B	1R	
King	Fence Erectors	Fence Erector	$15.18		1	
King	Flaggers	Journey Level	$37.26	7A	3I	
King	Glaziers	Journey Level	$56.16	7L	1Y	
King	Heat & Frost Insulators And Asbestos Workers	Journeyman	$63.18	5J	1S	
King	Heating Equipment Mechanics	Journey Level	$72.83	7F	1E	
King	Hod Carriers & Mason Tenders	Journey Level	$45.32	7A	3I	
King	Industrial Power Vacuum Cleaner	Journey Level	$9.47		1	
King	Inland Boatmen	Boat Operator	$56.78	5B	1K	
King	Inland Boatmen	Cook	$53.30	5B	1K	
King	Inland Boatmen	Deckhand	$53.30	5B	1K	

Provided to Builders Exchange of WA, Inc. For use per Conditional Agreement see www.bxwa.com - Always Verify Status

King	Inland Boatmen	Deckhand Engineer	$54.32	5B	1K	
King	Inland Boatmen	Launch Operator	$55.57	5B	1K	
King	Inland Boatmen	Mate	$55.57	5B	1K	
King	Inspection/Cleaning/Sealing Of Sewer & Water Systems By Remote Control	Cleaner Operator, Foamer Operator	$31.49		1	
King	Inspection/Cleaning/Sealing Of Sewer & Water Systems By Remote Control	Grout Truck Operator	$11.48		1	
King	Inspection/Cleaning/Sealing Of Sewer & Water Systems By Remote Control	Head Operator	$24.91		1	
King	Inspection/Cleaning/Sealing Of Sewer & Water Systems By Remote Control	Technician	$19.33		1	
King	Inspection/Cleaning/Sealing Of Sewer & Water Systems By Remote Control	Tv Truck Operator	$20.45		1	
King	Insulation Applicators	Journey Level	$54.02	5D	4C	
King	Ironworkers	Journeyman	$63.53	7N	1O	
King	Laborers	Air, Gas Or Electric Vibrating Screed	$43.95	7A	3I	
King	Laborers	Airtrac Drill Operator	$45.32	7A	3I	
King	Laborers	Ballast Regular Machine	$43.95	7A	3I	
King	Laborers	Batch Weighman	$37.26	7A	3I	
King	Laborers	Brick Pavers	$43.95	7A	3I	
King	Laborers	Brush Cutter	$43.95	7A	3I	
King	Laborers	Brush Hog Feeder	$43.95	7A	3I	
King	Laborers	Burner	$43.95	7A	3I	
King	Laborers	Caisson Worker	$45.32	7A	3I	
King	Laborers	Carpenter Tender	$43.95	7A	3I	
King	Laborers	Caulker	$43.95	7A	3I	
King	Laborers	Cement Dumper-paving	$44.76	7A	3I	
King	Laborers	Cement Finisher Tender	$43.95	7A	3I	
King	Laborers	Change House Or Dry Shack	$43.95	7A	3I	
King	Laborers	Chipping Gun (under 30 Lbs.)	$43.95	7A	3I	
King	Laborers	Chipping Gun(30 Lbs. And Over)	$44.76	7A	3I	
King	Laborers	Choker Setter	$43.95	7A	3I	
King	Laborers	Chuck Tender	$43.95	7A	3I	
King	Laborers	Clary Power Spreader	$44.76	7A	3I	
King	Laborers	Clean-up Laborer	$43.95	7A	3I	
King	Laborers	Concrete Dumper/chute Operator	$44.76	7A	3I	
King	Laborers	Concrete Form Stripper	$43.95	7A	3I	
King	Laborers	Concrete Placement Crew	$44.76	7A	3I	
King	Laborers	Concrete Saw Operator/core Driller	$44.76	7A	3I	

Provided to Builders Exchange of WA, Inc. For use as Conditional Agreement see www.bxwa.com - Always Verify Scope

King	Laborers	Crusher Feeder	$37.26	7A	3I	
King	Laborers	Curing Laborer	$43.95	7A	3I	
King	Laborers	Demolition: Wrecking & Moving (incl. Charred Material)	$43.95	7A	3I	
King	Laborers	Ditch Digger	$43.95	7A	3I	
King	Laborers	Diver	$45.32	7A	3I	
King	Laborers	Drill Operator (hydraulic,diamond)	$44.76	7A	3I	
King	Laborers	Dry Stack Walls	$43.95	7A	3I	
King	Laborers	Dump Person	$43.95	7A	3I	
King	Laborers	Epoxy Technician	$43.95	7A	3I	
King	Laborers	Erosion Control Worker	$43.95	7A	3I	
King	Laborers	Faller & Bucker Chain Saw	$44.76	7A	3I	
King	Laborers	Fine Graders	$43.95	7A	3I	
King	Laborers	Firewatch	$37.26	7A	3I	
King	Laborers	Form Setter	$43.95	7A	3I	
King	Laborers	Gabian Basket Builders	$43.95	7A	3I	
King	Laborers	General Laborer	$43.95	7A	3I	
King	Laborers	Grade Checker & Transit Person	$45.32	7A	3I	
King	Laborers	Grinders	$43.95	7A	3I	
King	Laborers	Grout Machine Tender	$43.95	7A	3I	
King	Laborers	Groutmen (pressure)including Post Tension Beams	$44.76	7A	3I	
King	Laborers	Guardrail Erector	$43.95	7A	3I	
King	Laborers	Hazardous Waste Worker (level A)	$45.32	7A	3I	
King	Laborers	Hazardous Waste Worker (level B)	$44.76	7A	3I	
King	Laborers	Hazardous Waste Worker (level C)	$43.95	7A	3I	
King	Laborers	High Scaler	$45.32	7A	3I	
King	Laborers	Jackhammer	$44.76	7A	3I	
King	Laborers	Laserbeam Operator	$44.76	7A	3I	
King	Laborers	Maintenance Person	$43.95	7A	3I	
King	Laborers	Manhole Builder-mudman	$44.76	7A	3I	
King	Laborers	Material Yard Person	$43.95	7A	3I	
King	Laborers	Motorman-dinky Locomotive	$44.76	7A	3I	
King	Laborers	Nozzleman (concrete Pump, Green Cutter When Using Combination Of High Pressure Air & Water On Concrete & Rock, Sandblast, Gunite, Shotcrete, Water Bla	$44.76	7A	3I	
King	Laborers	Pavement Breaker	$44.76	7A	3I	
King	Laborers	Pilot Car	$37.26	7A	3I	
King	Laborers	Pipe Layer Lead	$45.32	7A	3I	

Provided to Builders Exchange of WA, Inc. For usage Conditions Agreement see www.bxwa.com - Always Verify Scope

King	Laborers	Pipe Layer/tailor	$44.76	7A	3I	
King	Laborers	Pipe Pot Tender	$44.76	7A	3I	
King	Laborers	Pipe Reliner	$44.76	7A	3I	
King	Laborers	Pipe Wrapper	$44.76	7A	3I	
King	Laborers	Pot Tender	$43.95	7A	3I	
King	Laborers	Powderman	$45.32	7A	3I	
King	Laborers	Powderman's Helper	$43.95	7A	3I	
King	Laborers	Power Jacks	$44.76	7A	3I	
King	Laborers	Railroad Spike Puller - Power	$44.76	7A	3I	
King	Laborers	Raker - Asphalt	$45.32	7A	3I	
King	Laborers	Re-timberman	$45.32	7A	3I	
King	Laborers	Remote Equipment Operator	$44.76	7A	3I	
King	Laborers	Rigger/signal Person	$44.76	7A	3I	
King	Laborers	Rip Rap Person	$43.95	7A	3I	
King	Laborers	Rivet Buster	$44.76	7A	3I	
King	Laborers	Rodder	$44.76	7A	3I	
King	Laborers	Scaffold Erector	$43.95	7A	3I	
King	Laborers	Scale Person	$43.95	7A	3I	
King	Laborers	Sloper (over 20")	$44.76	7A	3I	
King	Laborers	Sloper Sprayer	$43.95	7A	3I	
King	Laborers	Spreader (concrete)	$44.76	7A	3I	
King	Laborers	Stake Hopper	$43.95	7A	3I	
King	Laborers	Stock Piler	$43.95	7A	3I	
King	Laborers	Tamper & Similar Electric, Air & Gas Operated Tools	$44.76	7A	3I	
King	Laborers	Tamper (multiple & Self-propelled)	$44.76	7A	3I	
King	Laborers	Timber Person - Sewer (lagger, Shorer & Cribber)	$44.76	7A	3I	
King	Laborers	Toolroom Person (at Jobsite)	$43.95	7A	3I	
King	Laborers	Topper	$43.95	7A	3I	
King	Laborers	Track Laborer	$43.95	7A	3I	
King	Laborers	Track Liner (power)	$44.76	7A	3I	
King	Laborers	Traffic Control Laborer	$39.84	7A	3I	8R
King	Laborers	Traffic Control Supervisor	$39.84	7A	3I	8R
King	Laborers	Truck Spotter	$43.95	7A	3I	
King	Laborers	Tugger Operator	$44.76	7A	3I	
King	Laborers	Tunnel Work-Compressed Air Worker 0-30 psi	$74.29	7A	3I	8Q
King	Laborers	Tunnel Work-Compressed Air Worker 30.01-44.00 psi	$79.32	7A	3I	8Q
King	Laborers	Tunnel Work-Compressed Air Worker 44.01-54.00 psi	$83.00	7A	3I	8Q
King	Laborers	Tunnel Work-Compressed Air Worker 54.01-60.00 psi	$88.70	7A	3I	8Q
King	Laborers	Tunnel Work-Compressed Air Worker 60.01-64.00 psi	$90.82	7A	3I	8Q

Provided to Builders Exchange of WA, Inc. For use per Conditional Agreement see www.bxwa.com - Always Verify Scope

King	Laborers	Tunnel Work-Compressed Air Worker 64.01-68.00 psi	$95.92	7A	3I	8Q
King	Laborers	Tunnel Work-Compressed Air Worker 68.01-70.00 psi	$97.82	7A	3I	8Q
King	Laborers	Tunnel Work-Compressed Air Worker 70.01-72.00 psi	$99.82	7A	3I	8Q
King	Laborers	Tunnel Work-Compressed Air Worker 72.01-74.00 psi	$101.82	7A	3I	8Q
King	Laborers	Tunnel Work-Guage and Lock Tender	$45.42	7A	3I	8Q
King	Laborers	Tunnel Work-Miner	$45.42	7A	3I	8Q
King	Laborers	Vibrator	$44.76	7A	3I	
King	Laborers	Vinyl Seamer	$43.95	7A	3I	
King	Laborers	Watchman	$33.86	7A	3I	
King	Laborers	Welder	$44.76	7A	3I	
King	Laborers	Well Point Laborer	$44.76	7A	3I	
King	Laborers	Window Washer/cleaner	$33.86	7A	3I	
King	Laborers - Underground Sewer & Water	General Laborer & Topman	$43.95	7A	3I	
King	Laborers - Underground Sewer & Water	Pipe Layer	$44.76	7A	3I	
King	Landscape Construction	Irrigation Or Lawn Sprinkler Installers	$13.56		1	
King	Landscape Construction	Landscape Equipment Operators Or Truck Drivers	$28.17		1	
King	Landscape Construction	Landscaping or Planting Laborers	$17.87		1	
King	Lathers	Journey Level	$54.02	5D	1H	
King	Marble Setters	Journey Level	$52.82	5A	1M	
King	Metal Fabrication (In Shop)	Fitter	$15.86		1	
King	Metal Fabrication (In Shop)	Laborer	$9.78		1	
King	Metal Fabrication (In Shop)	Machine Operator	$13.04		1	
King	Metal Fabrication (In Shop)	Painter	$11.10		1	
King	Metal Fabrication (In Shop)	Welder	$15.48		1	
King	Millwright	Journey Level	$55.52	5D	4C	
King	Modular Buildings	Cabinet Assembly	$11.56		1	
King	Modular Buildings	Electrician	$11.56		1	
King	Modular Buildings	Equipment Maintenance	$11.56		1	
King	Modular Buildings	Plumber	$11.56		1	
King	Modular Buildings	Production Worker	$9.47		1	
King	Modular Buildings	Tool Maintenance	$11.56		1	
King	Modular Buildings	Utility Person	$11.56		1	
King	Modular Buildings	Welder	$11.56		1	
King	Painters	Journey Level	$39.35	6Z	2B	
King	Pile Driver	Journey Level	$54.27	5D	4C	
King	Plasterers	Journey Level	$51.68	7Q	1R	
King	Playground & Park Equipment Installers	Journey Level	$9.47		1	

Provided to Builders Exchange of WA, Inc. For use per Conditional Agreement see www.bxwa.com - Always Verify Scope

King	Plumbers & Pipefitters	Journey Level	$75.69	6Z	1G	
King	Power Equipment Operators	Asphalt Plant Operators	$56.94	7A	3C	8P
King	Power Equipment Operators	Assistant Engineer	$53.57	7A	3C	8P
King	Power Equipment Operators	Barrier Machine (zipper)	$56.44	7A	3C	8P
King	Power Equipment Operators	Batch Plant Operator, Concrete	$56.44	7A	3C	8P
King	Power Equipment Operators	Bobcat	$53.57	7A	3C	8P
King	Power Equipment Operators	Brokk - Remote Demolition Equipment	$53.57	7A	3C	8P
King	Power Equipment Operators	Brooms	$53.57	7A	3C	8P
King	Power Equipment Operators	Bump Cutter	$56.44	7A	3C	8P
King	Power Equipment Operators	Cableways	$56.94	7A	3C	8P
King	Power Equipment Operators	Chipper	$56.44	7A	3C	8P
King	Power Equipment Operators	Compressor	$53.57	7A	3C	8P
King	Power Equipment Operators	Concrete Pump: Truck Mount With Boom Attachment Over 42 M	$56.94	7A	3C	8P
King	Power Equipment Operators	Concrete Finish Machine -laser Screed	$53.57	7A	3C	8P
King	Power Equipment Operators	Concrete Pump - Mounted Or Trailer High Pressure Line Pump, Pump High Pressure.	$56.00	7A	3C	8P
King	Power Equipment Operators	Concrete Pump: Truck Mount With Boom Attachment Up To 42m	$56.44	7A	3C	8P
King	Power Equipment Operators	Conveyors	$56.00	7A	3C	8P
King	Power Equipment Operators	Cranes Friction: 200 tons and over	$58.67	7A	3C	8P
King	Power Equipment Operators	Cranes: 20 Tons Through 44 Tons With Attachments	$56.44	7A	3C	8P
King	Power Equipment Operators	Cranes: 100 Tons Through 199 Tons, Or 150' Of Boom (Including Jib With Attachments)	$57.51	7A	3C	8P
King	Power Equipment Operators	Cranes: 200 tons- 299 tons, or 250' of boom including jib with attachments	$58.10	7A	3C	8P
King	Power Equipment Operators	Cranes: 300 tons and over or 300' of boom including jib with attachments	$58.67	7A	3C	8P
King	Power Equipment Operators	Cranes: 45 Tons Through 99 Tons, Under 150' Of Boom (including Jib With Attachments)	$56.94	7A	3C	8P
King	Power Equipment Operators	Cranes: A-frame - 10 Tons And Under	$53.57	7A	3C	8P
King	Power Equipment Operators	Cranes: Friction cranes through 199 tons	$58.10	7A	3C	8P
King	Power Equipment Operators	Cranes: Through 19 Tons With Attachments A-frame Over 10 Tons	$56.00	7A	3C	8P

Provided to Builders Exchange of WA, Inc. For use per Conditional Agreement see www.bxwa.com - Always Verify Still

King	Power Equipment Operators	Crusher	$56.44	7A	3C	8P
King	Power Equipment Operators	Deck Engineer/deck Winches (power)	$56.44	7A	3C	8P
King	Power Equipment Operators	Derricks, On Building Work	$56.94	7A	3C	8P
King	Power Equipment Operators	Dozers D-9 & Under	$56.00	7A	3C	8P
King	Power Equipment Operators	Drill Oilers: Auger Type, Truck Or Crane Mount	$56.00	7A	3C	8P
King	Power Equipment Operators	Drilling Machine	$57.51	7A	3C	8P
King	Power Equipment Operators	Elevator And Man-lift: Permanent And Shaft Type	$53.57	7A	3C	8P
King	Power Equipment Operators	Finishing Machine, Bidwell And Gamaco & Similar Equipment	$56.44	7A	3C	8P
King	Power Equipment Operators	Forklift: 3000 Lbs And Over With Attachments	$56.00	7A	3C	8P
King	Power Equipment Operators	Forklifts: Under 3000 Lbs. With Attachments	$53.57	7A	3C	8P
King	Power Equipment Operators	Grade Engineer: Using Blue Prints, Cut Sheets, Etc	$56.44	7A	3C	8P
King	Power Equipment Operators	Gradechecker/stakeman	$53.57	7A	3C	8P
King	Power Equipment Operators	Guardrail Punch	$56.44	7A	3C	8P
King	Power Equipment Operators	Hard Tail End Dump Articulating Off- Road Equipment 45 Yards. & Over	$56.94	7A	3C	8P
King	Power Equipment Operators	Hard Tail End Dump Articulating Off-road Equipment Under 45 Yards	$56.44	7A	3C	8P
King	Power Equipment Operators	Horizontal/directional Drill Locator	$56.00	7A	3C	8P
King	Power Equipment Operators	Horizontal/directional Drill Operator	$56.44	7A	3C	8P
King	Power Equipment Operators	Hydralifts/boom Trucks Over 10 Tons	$56.00	7A	3C	8P
King	Power Equipment Operators	Hydralifts/boom Trucks, 10 Tons And Under	$53.57	7A	3C	8P
King	Power Equipment Operators	Loader, Overhead 8 Yards. & Over	$57.51	7A	3C	8P
King	Power Equipment Operators	Loader, Overhead, 6 Yards. But Not Including 8 Yards	$56.94	7A	3C	8P
King	Power Equipment Operators	Loaders, Overhead Under 6 Yards	$56.44	7A	3C	8P
King	Power Equipment Operators	Loaders, Plant Feed	$56.44	7A	3C	8P
King	Power Equipment Operators	Loaders: Elevating Type Belt	$56.00	7A	3C	8P
King	Power Equipment Operators	Locomotives, All	$56.44	7A	3C	8P
King	Power Equipment Operators	Material Transfer Device	$56.44	7A	3C	8P
King	Power Equipment Operators	Mechanics, All (leadmen - $0.50 Per Hour Over Mechanic)	$57.51	7A	3C	8P
King	Power Equipment Operators	Motor Patrol Graders	$56.94	7A	3C	8P
King	Power Equipment Operators		$56.94	7A	3C	8P

Provided to Builders Exchange of WA, Inc. For use per Conditional Agreement see www.bxwa.com - Always Verify Scope

		Mucking Machine, Mole, Tunnel Drill, Boring, Road Header And/or Shield				
King	Power Equipment Operators	Oil Distributors, Blower Distribution & Mulch Seeding Operator	$53.57	7A	3C	8P
King	Power Equipment Operators	Outside Hoists (elevators And Manlifts), Air Tuggers,strato	$56.00	7A	3C	8P
King	Power Equipment Operators	Overhead, Bridge Type Crane: 20 Tons Through 44 Tons	$56.44	7A	3C	8P
King	Power Equipment Operators	Overhead, Bridge Type: 100 Tons And Over	$57.51	7A	3C	8P
King	Power Equipment Operators	Overhead, Bridge Type: 45 Tons Through 99 Tons	$56.94	7A	3C	8P
King	Power Equipment Operators	Pavement Breaker	$53.57	7A	3C	8P
King	Power Equipment Operators	Pile Driver (other Than Crane Mount)	$56.44	7A	3C	8P
King	Power Equipment Operators	Plant Oiler - Asphalt, Crusher	$56.00	7A	3C	8P
King	Power Equipment Operators	Posthole Digger, Mechanical	$53.57	7A	3C	8P
King	Power Equipment Operators	Power Plant	$53.57	7A	3C	8P
King	Power Equipment Operators	Pumps - Water	$53.57	7A	3C	8P
King	Power Equipment Operators	Quad 9, Hd 41, D10 And Over	$56.94	7A	3C	8P
King	Power Equipment Operators	Quick Tower - No Cab, Under 100 Feet In Height Based To Boom	$53.57	7A	3C	8P
King	Power Equipment Operators	Remote Control Operator On Rubber Tired Earth Moving Equipment	$56.94	7A	3C	8P
King	Power Equipment Operators	Rigger And Bellman	$53.57	7A	3C	8P
King	Power Equipment Operators	Rigger/Signal Person, Bellman (Certified)	$56.00	7A	3C	8P
King	Power Equipment Operators	Rollagon	$56.94	7A	3C	8P
King	Power Equipment Operators	Roller, Other Than Plant Mix	$53.57	7A	3C	8P
King	Power Equipment Operators	Roller, Plant Mix Or Multi-lift Materials	$56.00	7A	3C	8P
King	Power Equipment Operators	Roto-mill, Roto-grinder	$56.44	7A	3C	8P
King	Power Equipment Operators	Saws - Concrete	$56.00	7A	3C	8P
King	Power Equipment Operators	Scraper, Self Propelled Under 45 Yards	$56.44	7A	3C	8P
King	Power Equipment Operators	Scrapers - Concrete & Carry All	$56.00	7A	3C	8P
King	Power Equipment Operators	Scrapers, Self-propelled: 45 Yards And Over	$56.94	7A	3C	8P
King	Power Equipment Operators	Service Engineers - Equipment	$56.00	7A	3C	8P
King	Power Equipment Operators	Shotcrete/gunite Equipment	$53.57	7A	3C	8P
King	Power Equipment Operators	Shovel , Excavator, Backhoe, Tractors Under 15 Metric Tons.	$56.00	7A	3C	8P
King	Power Equipment Operators		$56.94	7A	3C	8P

Provided to Builders Exchange of WA, Inc. For use per Conditional Agreement see www.bxwa.com - Always Verify Scope

		Shovel, Excavator, Backhoe: Over 30 Metric Tons To 50 Metric Tons				
King	Power Equipment Operators	Shovel, Excavator, Backhoes, Tractors: 15 To 30 Metric Tons	$56.44	7A	3C	8P
King	Power Equipment Operators	Shovel, Excavator, Backhoes: Over 50 Metric Tons To 90 Metric Tons	$57.51	7A	3C	8P
King	Power Equipment Operators	Shovel, Excavator, Backhoes: Over 90 Metric Tons	$58.10	7A	3C	8P
King	Power Equipment Operators	Slipform Pavers	$56.94	7A	3C	8P
King	Power Equipment Operators	Spreader, Topsider & Screedman	$56.94	7A	3C	8P
King	Power Equipment Operators	Subgrader Trimmer	$56.44	7A	3C	8P
King	Power Equipment Operators	Tower Bucket Elevators	$56.00	7A	3C	8P
King	Power Equipment Operators	Tower Crane Up To 175' In Height Base To Boom	$57.51	7A	3C	8P
King	Power Equipment Operators	Tower Crane: over 175' through 250' in height, base to boom	$58.10	7A	3C	8P
King	Power Equipment Operators	Tower Cranes: over 250' in height from base to boom	$58.67	7A	3C	8P
King	Power Equipment Operators	Transporters, All Track Or Truck Type	$56.94	7A	3C	8P
King	Power Equipment Operators	Trenching Machines	$56.00	7A	3C	8P
King	Power Equipment Operators	Truck Crane Oiler/driver - 100 Tons And Over	$56.44	7A	3C	8P
King	Power Equipment Operators	Truck Crane Oiler/driver Under 100 Tons	$56.00	7A	3C	8P
King	Power Equipment Operators	Truck Mount Portable Conveyor	$56.44	7A	3C	8P
King	Power Equipment Operators	Welder	$56.94	7A	3C	8P
King	Power Equipment Operators	Wheel Tractors, Farmall Type	$53.57	7A	3C	8P
King	Power Equipment Operators	Yo Yo Pay Dozer	$56.44	7A	3C	8P
King	Power Equipment Operators-Underground Sewer & Water	Asphalt Plant Operators	$56.94	7A	3C	8P
King	Power Equipment Operators-Underground Sewer & Water	Assistant Engineer	$53.57	7A	3C	8P
King	Power Equipment Operators-Underground Sewer & Water	Barrier Machine (zipper)	$56.44	7A	3C	8P
King	Power Equipment Operators-Underground Sewer & Water	Batch Plant Operator, Concrete	$56.44	7A	3C	8P
King	Power Equipment Operators-Underground Sewer & Water	Bobcat	$53.57	7A	3C	8P
King	Power Equipment Operators-Underground Sewer & Water	Brokk - Remote Demolition Equipment	$53.57	7A	3C	8P
King	Power Equipment Operators-Underground Sewer & Water	Brooms	$53.57	7A	3C	8P
King	Power Equipment Operators-Underground Sewer & Water	Bump Cutter	$56.44	7A	3C	8P

Provided to Builders Exchange of WA, Inc. For use as Conditional Agreement see www.bxwa.com - Always Verify Scope

King	Power Equipment Operators-Underground Sewer & Water	Cableways	$56.94	7A	3C	8P
King	Power Equipment Operators-Underground Sewer & Water	Chipper	$56.44	7A	3C	8P
King	Power Equipment Operators-Underground Sewer & Water	Compressor	$53.57	7A	3C	8P
King	Power Equipment Operators-Underground Sewer & Water	Concrete Pump: Truck Mount With Boom Attachment Over 42 M	$56.94	7A	3C	8P
King	Power Equipment Operators-Underground Sewer & Water	Concrete Finish Machine -laser Screed	$53.57	7A	3C	8P
King	Power Equipment Operators-Underground Sewer & Water	Concrete Pump - Mounted Or Trailer High Pressure Line Pump, Pump High Pressure.	$56.00	7A	3C	8P
King	Power Equipment Operators-Underground Sewer & Water	Concrete Pump: Truck Mount With Boom Attachment Up To 42m	$56.44	7A	3C	8P
King	Power Equipment Operators-Underground Sewer & Water	Conveyors	$56.00	7A	3C	8P
King	Power Equipment Operators-Underground Sewer & Water	Cranes Friction: 200 tons and over	$58.67	7A	3C	8P
King	Power Equipment Operators-Underground Sewer & Water	Cranes: 20 Tons Through 44 Tons With Attachments	$56.44	7A	3C	8P
King	Power Equipment Operators-Underground Sewer & Water	Cranes: 100 Tons Through 199 Tons, Or 150' Of Boom (Including Jib With Attachments)	$57.51	7A	3C	8P
King	Power Equipment Operators-Underground Sewer & Water	Cranes: 200 tons- 299 tons, or 250' of boom including jib with attachments	$58.10	7A	3C	8P
King	Power Equipment Operators-Underground Sewer & Water	Cranes: 300 tons and over or 300' of boom including jib with attachments	$58.67	7A	3C	8P
King	Power Equipment Operators-Underground Sewer & Water	Cranes: 45 Tons Through 99 Tons, Under 150' Of Boom (including Jib With Attachments)	$56.94	7A	3C	8P
King	Power Equipment Operators-Underground Sewer & Water	Cranes: A-frame - 10 Tons And Under	$53.57	7A	3C	8P
King	Power Equipment Operators-Underground Sewer & Water	Cranes: Friction cranes through 199 tons	$58.10	7A	3C	8P
King	Power Equipment Operators-Underground Sewer & Water	Cranes: Through 19 Tons With Attachments A-frame Over 10 Tons	$56.00	7A	3C	8P
King	Power Equipment Operators-Underground Sewer & Water	Crusher	$56.44	7A	3C	8P
King	Power Equipment Operators-Underground Sewer & Water	Deck Engineer/deck Winches (power)	$56.44	7A	3C	8P
King	Power Equipment Operators-Underground Sewer & Water	Derricks, On Building Work	$56.94	7A	3C	8P
King	Power Equipment Operators-Underground Sewer & Water	Dozers D-9 & Under	$56.00	7A	3C	8P

Provided to Builders Exchange of WA, Inc. For use per Conditional Agreement see www.bxwa.com - Always Verify Scope

King	Power Equipment Operators-Underground Sewer & Water	Drill Oilers: Auger Type, Truck Or Crane Mount	$56.00	7A	3C	8P
King	Power Equipment Operators-Underground Sewer & Water	Drilling Machine	$57.51	7A	3C	8P
King	Power Equipment Operators-Underground Sewer & Water	Elevator And Man-lift: Permanent And Shaft Type	$53.57	7A	3C	8P
King	Power Equipment Operators-Underground Sewer & Water	Finishing Machine, Bidwell And Gamaco & Similar Equipment	$56.44	7A	3C	8P
King	Power Equipment Operators-Underground Sewer & Water	Forklift: 3000 Lbs And Over With Attachments	$56.00	7A	3C	8P
King	Power Equipment Operators-Underground Sewer & Water	Forklifts: Under 3000 Lbs. With Attachments	$53.57	7A	3C	8P
King	Power Equipment Operators-Underground Sewer & Water	Grade Engineer: Using Blue Prints, Cut Sheets, Etc	$56.44	7A	3C	8P
King	Power Equipment Operators-Underground Sewer & Water	Gradechecker/stakeman	$53.57	7A	3C	8P
King	Power Equipment Operators-Underground Sewer & Water	Guardrail Punch	$56.44	7A	3C	8P
King	Power Equipment Operators-Underground Sewer & Water	Hard Tail End Dump Articulating Off- Road Equipment 45 Yards. & Over	$56.94	7A	3C	8P
King	Power Equipment Operators-Underground Sewer & Water	Hard Tail End Dump Articulating Off-road Equipment Under 45 Yards	$56.44	7A	3C	8P
King	Power Equipment Operators-Underground Sewer & Water	Horizontal/directional Drill Locator	$56.00	7A	3C	8P
King	Power Equipment Operators-Underground Sewer & Water	Horizontal/directional Drill Operator	$56.44	7A	3C	8P
King	Power Equipment Operators-Underground Sewer & Water	Hydralifts/boom Trucks Over 10 Tons	$56.00	7A	3C	8P
King	Power Equipment Operators-Underground Sewer & Water	Hydralifts/boom Trucks, 10 Tons And Under	$53.57	7A	3C	8P
King	Power Equipment Operators-Underground Sewer & Water	Loader, Overhead 8 Yards. & Over	$57.51	7A	3C	8P
King	Power Equipment Operators-Underground Sewer & Water	Loader, Overhead, 6 Yards. But Not Including 8 Yards	$56.94	7A	3C	8P
King	Power Equipment Operators-Underground Sewer & Water	Loaders, Overhead Under 6 Yards	$56.44	7A	3C	8P
King	Power Equipment Operators-Underground Sewer & Water	Loaders, Plant Feed	$56.44	7A	3C	8P
King	Power Equipment Operators-Underground Sewer & Water	Loaders: Elevating Type Belt	$56.00	7A	3C	8P
King	Power Equipment Operators-Underground Sewer & Water	Locomotives, All	$56.44	7A	3C	8P
King	Power Equipment Operators-Underground Sewer & Water	Material Transfer Device	$56.44	7A	3C	8P
King	Power Equipment Operators-Underground Sewer & Water	Mechanics, All (leadmen - $0.50 Per Hour Over Mechanic)	$57.51	7A	3C	8P
King	Power Equipment Operators-Underground Sewer & Water	Motor Patrol Graders	$56.94	7A	3C	8P

Provided to Builders Exchange of WA, Inc. For usage Conditional Agreement see www.bxwa.com - Always Verify Scope

King	Power Equipment Operators-Underground Sewer & Water	Mucking Machine, Mole, Tunnel Drill, Boring, Road Header And/or Shield	$56.94	7A	3C	8P
King	Power Equipment Operators-Underground Sewer & Water	Oil Distributors, Blower Distribution & Mulch Seeding Operator	$53.57	7A	3C	8P
King	Power Equipment Operators-Underground Sewer & Water	Outside Hoists (elevators And Manlifts), Air Tuggers,strato	$56.00	7A	3C	8P
King	Power Equipment Operators-Underground Sewer & Water	Overhead, Bridge Type Crane: 20 Tons Through 44 Tons	$56.44	7A	3C	8P
King	Power Equipment Operators-Underground Sewer & Water	Overhead, Bridge Type: 100 Tons And Over	$57.51	7A	3C	8P
King	Power Equipment Operators-Underground Sewer & Water	Overhead, Bridge Type: 45 Tons Through 99 Tons	$56.94	7A	3C	8P
King	Power Equipment Operators-Underground Sewer & Water	Pavement Breaker	$53.57	7A	3C	8P
King	Power Equipment Operators-Underground Sewer & Water	Pile Driver (other Than Crane Mount)	$56.44	7A	3C	8P
King	Power Equipment Operators-Underground Sewer & Water	Plant Oiler - Asphalt, Crusher	$56.00	7A	3C	8P
King	Power Equipment Operators-Underground Sewer & Water	Posthole Digger, Mechanical	$53.57	7A	3C	8P
King	Power Equipment Operators-Underground Sewer & Water	Power Plant	$53.57	7A	3C	8P
King	Power Equipment Operators-Underground Sewer & Water	Pumps - Water	$53.57	7A	3C	8P
King	Power Equipment Operators-Underground Sewer & Water	Quad 9, Hd 41, D10 And Over	$56.94	7A	3C	8P
King	Power Equipment Operators-Underground Sewer & Water	Quick Tower - No Cab, Under 100 Feet In Height Based To Boom	$53.57	7A	3C	8P
King	Power Equipment Operators-Underground Sewer & Water	Remote Control Operator On Rubber Tired Earth Moving Equipment	$56.94	7A	3C	8P
King	Power Equipment Operators-Underground Sewer & Water	Rigger And Bellman	$53.57	7A	3C	8P
King	Power Equipment Operators-Underground Sewer & Water	Rigger/Signal Person, Bellman (Certified)	$56.00	7A	3C	8P
King	Power Equipment Operators-Underground Sewer & Water	Rollagon	$56.94	7A	3C	8P
King	Power Equipment Operators-Underground Sewer & Water	Roller, Other Than Plant Mix	$53.57	7A	3C	8P
King	Power Equipment Operators-Underground Sewer & Water	Roller, Plant Mix Or Multi-lift Materials	$56.00	7A	3C	8P
King	Power Equipment Operators-Underground Sewer & Water	Roto-mill, Roto-grinder	$56.44	7A	3C	8P
King	Power Equipment Operators-Underground Sewer & Water	Saws - Concrete	$56.00	7A	3C	8P
King	Power Equipment Operators-Underground Sewer & Water	Scraper, Self Propelled Under 45 Yards	$56.44	7A	3C	8P
King			$56.00	7A	3C	8P

Provided to Builders Exchange of WA, Inc. For use per Conditional Agreement see www.bxwa.com - Always Verify Scope

	Power Equipment Operators-Underground Sewer & Water	Scrapers - Concrete & Carry All				
King	Power Equipment Operators-Underground Sewer & Water	Scrapers, Self-propelled: 45 Yards And Over	$56.94	7A	3C	8P
King	Power Equipment Operators-Underground Sewer & Water	Service Engineers - Equipment	$56.00	7A	3C	8P
King	Power Equipment Operators-Underground Sewer & Water	Shotcrete/gunite Equipment	$53.57	7A	3C	8P
King	Power Equipment Operators-Underground Sewer & Water	Shovel , Excavator, Backhoe, Tractors Under 15 Metric Tons.	$56.00	7A	3C	8P
King	Power Equipment Operators-Underground Sewer & Water	Shovel, Excavator, Backhoe: Over 30 Metric Tons To 50 Metric Tons	$56.94	7A	3C	8P
King	Power Equipment Operators-Underground Sewer & Water	Shovel, Excavator, Backhoes, Tractors: 15 To 30 Metric Tons	$56.44	7A	3C	8P
King	Power Equipment Operators-Underground Sewer & Water	Shovel, Excavator, Backhoes: Over 50 Metric Tons To 90 Metric Tons	$57.51	7A	3C	8P
King	Power Equipment Operators-Underground Sewer & Water	Shovel, Excavator, Backhoes: Over 90 Metric Tons	$58.10	7A	3C	8P
King	Power Equipment Operators-Underground Sewer & Water	Slipform Pavers	$56.94	7A	3C	8P
King	Power Equipment Operators-Underground Sewer & Water	Spreader, Topsider & Screedman	$56.94	7A	3C	8P
King	Power Equipment Operators-Underground Sewer & Water	Subgrader Trimmer	$56.44	7A	3C	8P
King	Power Equipment Operators-Underground Sewer & Water	Tower Bucket Elevators	$56.00	7A	3C	8P
King	Power Equipment Operators-Underground Sewer & Water	Tower Crane Up To 175' In Height Base To Boom	$57.51	7A	3C	8P
King	Power Equipment Operators-Underground Sewer & Water	Tower Crane: over 175' through 250' in height, base to boom	$58.10	7A	3C	8P
King	Power Equipment Operators-Underground Sewer & Water	Tower Cranes: over 250' in height from base to boom	$58.67	7A	3C	8P
King	Power Equipment Operators-Underground Sewer & Water	Transporters, All Track Or Truck Type	$56.94	7A	3C	8P
King	Power Equipment Operators-Underground Sewer & Water	Trenching Machines	$56.00	7A	3C	8P
King	Power Equipment Operators-Underground Sewer & Water	Truck Crane Oiler/driver - 100 Tons And Over	$56.44	7A	3C	8P
King	Power Equipment Operators-Underground Sewer & Water	Truck Crane Oiler/driver Under 100 Tons	$56.00	7A	3C	8P
King	Power Equipment Operators-Underground Sewer & Water	Truck Mount Portable Conveyor	$56.44	7A	3C	8P
King	Power Equipment Operators-Underground Sewer & Water	Welder	$56.94	7A	3C	8P
King	Power Equipment Operators-Underground Sewer & Water	Wheel Tractors, Farmall Type	$53.57	7A	3C	8P
King	Power Equipment Operators-Underground Sewer & Water	Yo Yo Pay Dozer	$56.44	7A	3C	8P

Provided to Builders Exchange of WA, Inc. For usage Conditional Agreement see www.bxwa.com - Always Verify Scale

King	Power Line Clearance Tree Trimmers	Journey Level In Charge	$45.75	5A	4A	
King	Power Line Clearance Tree Trimmers	Spray Person	$43.38	5A	4A	
King	Power Line Clearance Tree Trimmers	Tree Equipment Operator	$45.75	5A	4A	
King	Power Line Clearance Tree Trimmers	Tree Trimmer	$40.84	5A	4A	
King	Power Line Clearance Tree Trimmers	Tree Trimmer Groundperson	$30.74	5A	4A	
King	Refrigeration & Air Conditioning Mechanics	Journey Level	$74.36	6Z	1G	
King	Residential Brick Mason	Journey Level	$52.82	5A	1M	
King	Residential Carpenters	Journey Level	$28.20		1	
King	Residential Cement Masons	Journey Level	$22.64		1	
King	Residential Drywall Applicators	Journey Level	$40.64	5D	4C	
King	Residential Drywall Tapers	Journey Level	$54.07	5P	1E	
King	Residential Electricians	Journey Level	$30.44		1	
King	Residential Glaziers	Journey Level	$38.40	7L	1H	
King	Residential Insulation Applicators	Journey Level	$26.28		1	
King	Residential Laborers	Journey Level	$23.03		1	
King	Residential Marble Setters	Journey Level	$24.09		1	
King	Residential Painters	Journey Level	$24.46		1	
King	Residential Plumbers & Pipefitters	Journey Level	$34.69		1	
King	Residential Refrigeration & Air Conditioning Mechanics	Journey Level	$74.36	6Z	1G	
King	Residential Sheet Metal Workers	Journey Level (Field or Shop)	$43.46	7F	1R	
King	Residential Soft Floor Layers	Journey Level	$44.11	5A	3D	
King	Residential Sprinkler Fitters (Fire Protection)	Journey Level	$42.73	5C	2R	
King	Residential Stone Masons	Journey Level	$52.82	5A	1M	
King	Residential Terrazzo Workers	Journey Level	$47.46	5A	1M	
King	Residential Terrazzo/Tile Finishers	Journey Level	$21.46		1	
King	Residential Tile Setters	Journey Level	$25.17		1	
King	Roofers	Journey Level	$46.46	5A	3H	
King	Roofers	Using Irritable Bituminous Materials	$48.71	5A	3H	
King	Sheet Metal Workers	Journey Level (Field or Shop)	$72.83	7F	1E	
King	Shipbuilding & Ship Repair	Boilermaker	$40.87	7M	1H	
King	Shipbuilding & Ship Repair	Carpenter	$40.41	7T	2B	
King	Shipbuilding & Ship Repair	Electrician	$41.43	7T	4B	
King	Shipbuilding & Ship Repair	Heat & Frost Insulator	$63.18	5J	1S	
King	Shipbuilding & Ship Repair	Laborer	$41.47	7T	4B	

Provided to Builders Exchange of WA, Inc. For use per Conditional Agreement see www.bxwa.com - Always Verify Scope

King	Shipbuilding & Ship Repair	Machinist	$41.46	7T	4B	
King	Shipbuilding & Ship Repair	Operator	$41.39	7T	4B	
King	Shipbuilding & Ship Repair	Painter	$41.42	7T	4B	
King	Shipbuilding & Ship Repair	Pipefitter	$41.40	7T	4B	
King	Shipbuilding & Ship Repair	Rigger	$41.48	7T	4B	
King	Shipbuilding & Ship Repair	Sheet Metal	$41.43	7T	4B	
King	Shipbuilding & Ship Repair	Shipfitter	$41.48	7T	4B	
King	Shipbuilding & Ship Repair	Trucker	$41.32	7T	4B	
King	Shipbuilding & Ship Repair	Warehouse	$41.37	7T	4B	
King	Shipbuilding & Ship Repair	Welder/Burner	$41.48	7T	4B	
King	Sign Makers & Installers (Electrical)	Sign Installer	$22.92		1	
King	Sign Makers & Installers (Electrical)	Sign Maker	$21.36		1	
King	Sign Makers & Installers (Non-Electrical)	Sign Installer	$27.28		1	
King	Sign Makers & Installers (Non-Electrical)	Sign Maker	$33.25		1	
King	Soft Floor Layers	Journey Level	$44.11	5A	3D	
King	Solar Controls For Windows	Journey Level	$12.44		1	
King	Sprinkler Fitters (Fire Protection)	Journey Level	$70.14	5C	1X	
King	Stage Rigging Mechanics (Non Structural)	Journey Level	$13.23		1	
King	Stone Masons	Journey Level	$52.82	5A	1M	
King	Street And Parking Lot Sweeper Workers	Journey Level	$19.09		1	
King	Surveyors	Assistant Construction Site Surveyor	$56.00	7A	3C	8P
King	Surveyors	Chainman	$55.47	7A	3C	8P
King	Surveyors	Construction Site Surveyor	$56.94	7A	3C	8P
King	Telecommunication Technicians	Journey Level	$22.76		1	
King	Telephone Line Construction - Outside	Cable Splicer	$37.60	5A	2B	
King	Telephone Line Construction - Outside	Hole Digger/Ground Person	$20.79	5A	2B	
King	Telephone Line Construction - Outside	Installer (Repairer)	$36.02	5A	2B	
King	Telephone Line Construction - Outside	Special Aparatus Installer I	$37.60	5A	2B	
King	Telephone Line Construction - Outside	Special Apparatus Installer II	$36.82	5A	2B	
King	Telephone Line Construction - Outside	Telephone Equipment Operator (Heavy)	$37.60	5A	2B	
King	Telephone Line Construction - Outside	Telephone Equipment Operator (Light)	$34.94	5A	2B	
King	Telephone Line Construction - Outside	Telephone Lineperson	$34.93	5A	2B	

Provided to Builders Exchange of WA, Inc. For use per Conditional Agreement see www.bxwa.com - Always Verify Status

King	Telephone Line Construction - Outside	Television Groundperson	$19.73	5A	2B	
King	Telephone Line Construction - Outside	Television Lineperson/Installer	$26.31	5A	2B	
King	Telephone Line Construction - Outside	Television System Technician	$31.50	5A	2B	
King	Telephone Line Construction - Outside	Television Technician	$28.23	5A	2B	
King	Telephone Line Construction - Outside	Tree Trimmer	$34.93	5A	2B	
King	Terrazzo Workers	Journey Level	$47.46	5A	1M	
King	Tile Setters	Journey Level	$21.65		1	
King	Tile, Marble & Terrazzo Finishers	Finisher	$38.29	5A	1B	
King	Traffic Control Stripers	Journey Level	$43.73	7A	1K	
King	Truck Drivers	Asphalt Mix Over 16 Yards (W. WA-Joint Council 28)	$51.25	5D	3A	8L
King	Truck Drivers	Asphalt Mix To 16 Yards (W. WA-Joint Council 28)	$50.41	5D	3A	8L
King	Truck Drivers	Dump Truck & Trailer	$51.25	5D	3A	8L
King	Truck Drivers	Dump Truck (W. WA-Joint Council 28)	$50.41	5D	3A	8L
King	Truck Drivers	Other Trucks (W. WA-Joint Council 28)	$51.25	5D	3A	8L
King	Truck Drivers	Transit Mixer	$43.23		1	
King	Well Drillers & Irrigation Pump Installers	Irrigation Pump Installer	$17.71		1	
King	Well Drillers & Irrigation Pump Installers	Oiler	$12.97		1	
King	Well Drillers & Irrigation Pump Installers	Well Driller	$18.00		1	

Provided to Builders Exchange of WA, Inc. For use per Conditional Agreement see www.bxwa.com - Always Verify Status

General Decision Number: WA160001 03/04/2016 WA1

Superseded General Decision Number: WA20150001

State: Washington

Construction Type: Highway

Counties: Washington Statewide.

HIGHWAY (Excludes D.O.E. Hanford Site in Benton and Franklin Counties)

Note: Under Executive Order (EO) 13658, an hourly minimum wage of $10.15 for calendar year 2016 applies to all contracts subject to the Davis-Bacon Act for which the solicitation was issued on or after January 1, 2015. If this contract is covered by the EO, the contractor must pay all workers in any classification listed on this wage determination at least $10.15 (or the applicable wage rate listed on this wage determination, if it is higher) for all hours spent performing on the contract in calendar year 2016. The EO minimum wage rate will be adjusted annually. Additional information on contractor requirements and worker protections under the EO is available at www.dol.gov/whd/govcontracts.

Modification Number	Publication Date
0	01/08/2016
1	02/19/2016
2	02/26/2016
3	**03/04/2016**

CARP0001-008 06/01/2015

	Rates	Fringes
CARPENTER		
GROUP 1	$ 27.61	14.00
GROUP 2	$ 41.86	14.49
GROUP 3	$ 32.97	14.00
GROUP 4	$ 31.94	14.00
GROUP 5	$ 73.44	14.00
GROUP 6	$ 35.02	14.00
GROUP 7	$ 36.72	14.00
GROUP 8	$ 33.27	14.00
GROUP 9	$ 35.02	14.00

Provided to Builders Exchange of WA, Inc. For usage Conditions Agreement see www.bxwa.com - Always Verify Scale

CARPENTER & DIVER CLASSIFICATIONS:

GROUP 1: Carpenter
GROUP 2: Millwright, machine erector
GROUP 3: Piledriver - includes driving, pulling, cutting, placing collars, setting, welding, or creosote treated material, on all piling
GROUP 4: Bridge carpenters
GROUP 5: Diver Wet
GROUP 6: Diver Tender, Manifold Operator, ROV Operator
GROUP 7: Diver Standby, Bell/Vehicle or Submersible operator Not Under Pressure
GROUP 8: Assistant Tender, ROV Tender/Technician
GROUP 9: Manifold Operator-Mixed Gas

ZONE PAY:

ZONE 1	0-40 MILES	FREE
ZONE 2	41-65 MILES	$2.25/PER HOUR
ZONE 3	66-100 MILES	$3.25/PER HOUR
ZONE 4	OVER 100 MILES	$4.75/PER HOUR

DISPATCH POINTS:

CARPENTERS/MILLWRIGHTS: PASCO (515 N Neel Street) or Main Post Office of established residence of employee (Whichever is closest to the worksite).

CARPENTERS/PILEDRIVER: SPOKANE (127 E. AUGUSTA AVE.) or Main Post Office of established residence of employee (Whichever is closest to the worksite).

CARPENTERS: WENATCHEE (27 N. CHELAN) or Main Post Office of established residence of employee (Whichever is closest to the worksite).

CARPENTERS: COEUR D' ALENE (1839 N. GOVERNMENT WAY) or Main Post Office of established residence of employee (Whichever is closest to the worksite).

CARPENTERS: MOSCOW (302 N. JACKSON) or Main Post Office of established residence of employee (Whichever is closest to the worksite).

Provided to Builders Exchange of WA, Inc. For usage Conditions Agreement see www.bxwa.com - Always Verify Scale

DEPTH PAY FOR DIVERS BELOW WATER SURFACE:
50-100 feet $2.00 per foot
101-150 feet $3.00 per foot
151-220 feet $4.00 per foot
221 feet and deeper $5.00 per foot

PREMIUM PAY FOR DIVING IN ENCLOSURES WITH NO VERTICAL ASCENT:
0-25 feet Free
26-300 feet $1.00 per Foot

SATURATION DIVING:
The standby rate applies until saturation starts. The saturation diving rate applies when divers are under pressure continuously until work task and decompression are complete. the diver rate shall be paid for all saturation hours.

WORK IN COMBINATION OF CLASSIFICATIONS:
Employees working in any combination of classifications within the diving crew (except dive supervisor) in a shift are paid in the classification with the highest rate for that shift.

HAZMAT PROJECTS:

Anyone working on a HAZMAT job (task), where HAZMAT certification is required, shall be compensated at a premium, in addition to the classification working in as follows:

LEVEL D + $.25 per hour - This is the lowest level of protection. No respirator is used and skin protection is minimal.

LEVEL C + $.50 per hour - This level uses an air purifying respirator or additional protective clothing.

LEVEL B + $.75 per hour - Uses same respirator protection as Level A. Supplied air line is provided in conjunction with a chemical "splash suit".

LEVEL A +$1.00 per hour - This level utilizes a fully encapsulated suit with a self-contained breathing apparatus or a supplied air line.

Provided to Builders Exchange of WA, Inc. For usage Conditions Agreement see www.bxwa.com - Always Verify Scale

CARP0003-006 10/01/2011

SOUTHWEST WASHINGTON: CLARK, COWLITZ, KLICKITAT, LEWIS(Piledriver only), PACIFIC (South of a straight line made by extending the north boundary line of Wahkiakum County west to Willapa Bay to the Pacific Ocean), SKAMANIA AND WAHKIAKUM COUNTIES and INCLUDES THE ENTIRE PENINSULA WEST OF WILLAPA BAY

SEE ZONE DESCRIPTION FOR CITIES BASE POINTS

ZONE 1:

	Rates	Fringes
Carpenters:		
CARPENTERS	$ 32.04	14.18
DIVERS TENDERS	$ 36.34	14.18
DIVERS	$ 77.08	14.18
DRYWALL	$ 27.56	14.18
MILLWRIGHTS	$ 32.19	14.18
PILEDRIVERS	$ 33.04	14.18

DEPTH PAY:
50 TO 100 FEET $1.00 PER FOOT OVER 50 FEET
101 TO 150 FEET $1.50 PER FOOT OVER 101 FEET
151 TO 200 FEET $2.00 PER FOOT OVER 151 FEET

Zone Differential (Add up Zone 1 rates):
Zone 2 - $0.85
Zone 3 - 1.25
Zone 4 - 1.70
Zone 5 - 2.00
Zone 6 - 3.00

BASEPOINTS: ASTORIA, LONGVIEW, PORTLAND, THE DALLES, AND VANCOUVER, (NOTE: All dispatches for Washington State Counties: Cowlitz, Wahkiakum and Pacific shall be from Longview Local #1707 and mileage shall be computed from that point.)

ZONE 1: Projects located within 30 miles of the respective city hall of the above mentioned cities
ZONE 2: Projects located more than 30 miles and less than 40 miles of the respective city of the above mentioned cities
ZONE 3: Projects located more than 40 miles and less than 50 miles of the respective city of the above mentioned cities
ZONE 4: Projects located more than 50 miles and less than 60 miles of the respective city of the above mentioned cities.
ZONE 5: Projects located more than 60 miles and less than 70 miles of the respective city of the above mentioned cities
ZONE 6: Projects located more than 70 miles of the respected city of the above mentioned cities

---

Provided to Builders Exchange of WA, Inc. For usage Conditions Agreement see www.bxwa.com - Always Verify Scale

CARP0770-003 06/01/2015

	Rates	Fringes
CARPENTER		
CENTRAL WASHINGTON: CHELAN, DOUGLAS (WEST OF THE 120TH MERIDIAN), KITTITAS, OKANOGAN (WEST OF THE 120TH MERIDIAN) AND YAKIMA COUNTIES		
CARPENTERS ON CREOSOTE MATERIAL	$ 40.46	13.66
CARPENTERS	$ 40.36	13.66
DIVERS TENDER	$ 35.02	14.00
DIVERS	$ 73.44	14.00
MILLWRIGHT AND MACHINE ERECTORS	$ 41.86	13.66
PILEDRIVER, DRIVING, PULLING, CUTTING, PLACING COLLARS, SETTING, WELDING OR CRESOTE TREATED MATERIAL, ALL PILING	$ 40.61	13.66

(HOURLY ZONE PAY: WESTERN AND CENTRAL WASHINGTON - ALL CLASSIFICATIONS EXCEPT MILLWRIGHTS AND PILEDRIVERS

Hourly Zone Pay shall be paid on jobs located outside of the free zone computed from the city center of the following listed cities:

Seattle	Olympia	Bellingham
Auburn	Bremerton	Anacortes
Renton	Shelton	Yakima
Aberdeen-Hoquiam	Tacoma	Wenatchee
Ellensburg	Everett	Port Angeles
Centralia	Mount Vernon	Sunnyside
Chelan	Pt. Townsend	

Zone Pay:	
0 -25 radius miles	Free
26-35 radius miles	$1.00/hour
36-45 radius miles	$1.15/hour
46-55 radius miles	$1.35/hour
Over 55 radius miles	$1.55/hour

(HOURLY ZONE PAY: WESTERN AND CENTRAL WASHINGTON - MILLWRIGHT AND PILEDRIVER ONLY)

Hourly Zone Pay shall be computed from Seattle Union Hall, Tacoma City center, and Everett City center

Zone Pay:	
0 -25 radius miles	Free
26-45 radius miles	$ .70/hour
Over 45 radius miles	$1.50/hour

Provided to Builders Exchange of WA, Inc. For usage Conditions Agreement see www.bxwa.com - Always Verify Scale

---

CARP0770-006 06/01/2015

	Rates	Fringes
CARPENTER		
WESTERN WASHINGTON: CLALLAM, GRAYS HARBOR, ISLAND, JEFFERSON, KING, KITSAP, LEWIS (excludes piledrivers only), MASON, PACIFIC (North of a straight line made by extending the north boundary line of Wahkiakum County west to the Pacific Ocean), PIERCE, SAN JUAN, SKAGIT, SNOHOMISH, THURSTON AND WHATCOM COUNTIES		
BRIDGE CARPENTERS	$ 40.36	13.66
CARPENTERS ON CREOSOTE MATERIAL	$ 40.46	13.66
CARPENTERS	$ 40.36	13.66
DIVERS TENDER	$ 44.67	13.66
DIVERS	$ 93.56	13.66
MILLWRIGHT AND MACHINE ERECTORS	$ 41.86	13.66
PILEDRIVER, DRIVING, PULLING, CUTTING, PLACING COLLARS, SETTING, WELDING OR CRESOTE TREATED MATERIAL, ALL PILING	$ 40.61	13.66

(HOURLY ZONE PAY: WESTERN AND CENTRAL WASHINGTON - ALL CLASSIFICATIONS EXCEPT MILLWRIGHTS AND PILEDRIVERS

Hourly Zone Pay shall be paid on jobs located outside of the free zone computed from the city center of the following listed cities:

Seattle	Olympia	Bellingham
Auburn	Bremerton	Anacortes
Renton	Shelton	Yakima
Aberdeen-Hoquiam	Tacoma	Wenatchee
Ellensburg	Everett	Port Angeles
Centralia	Mount Vernon	Sunnyside
Chelan	Pt. Townsend	

Zone Pay:	
0 -25 radius miles	Free
26-35 radius miles	$1.00/hour
36-45 radius miles	$1.15/hour
46-55 radius miles	$1.35/hour
Over 55 radius miles	$1.55/hour

(HOURLY ZONE PAY: WESTERN AND CENTRAL WASHINGTON - MILLWRIGHT AND PILEDRIVER ONLY)

Hourly Zone Pay shall be computed from Seattle Union Hall, Tacoma City center, and Everett City center

Zone Pay:	
0 -25 radius miles	Free
26-45 radius miles	$ .70/hour
Over 45 radius miles	$1.50/hour

Provided to Builders Exchange of WA, Inc. For usage Conditions Agreement see www.bxwa.com - Always Verify Scale

---

ELEC0046-001 02/01/2016

CALLAM, JEFFERSON, KING AND KITSAP COUNTIES

	Rates	Fringes
CABLE SPLICER	$ 46.87	3%+15.96
ELECTRICIAN	$ 45.77	3%+17.91

*** ELEC0048-003 01/01/2016**

CLARK, KLICKITAT AND SKAMANIA COUNTIES

	Rates	Fringes
CABLE SPLICER	$ 44.22	21.50
ELECTRICIAN	**$ 40.20**	**21.11**

HOURLY ZONE PAY:

Hourly Zone Pay shall be paid on jobs located outside of the free zone computed from the city center of the following listed cities:

Portland, The Dalles, Hood River, Tillamook, Seaside and Astoria

Zone Pay:
Zone 1: 31-50 miles $1.50/hour
Zone 2: 51-70 miles $3.50/hour
Zone 3: 71-90 miles $5.50/hour
Zone 4: Beyond 90 miles $9.00/hour

*These are not miles driven. Zones are based on Delorrne Street Atlas USA 2006 plus.

ELEC0048-029 01/01/2016

COWLITZ AND WAHKIAKUM COUNTY

	Rates	Fringes
CABLE SPLICER	$ 44.22	21.50
ELECTRICIAN	$ 40.20	21.11

Provided to Builders Exchange of WA, Inc. For usage Conditions Agreement see www.bxwa.com - Always Verify Scale

ELEC0073-001 07/01/2015

ADAMS, FERRY, LINCOLN, PEND OREILLE, SPOKANE, STEVENS, WHITMAN COUNTIES

	Rates	Fringes
CABLE SPLICER	$ 34.10	16.68
ELECTRICIAN	$ 31.00	16.68

ELEC0076-002 09/01/2014

GRAYS HARBOR, LEWIS, MASON, PACIFIC, PIERCE, AND THURSTON COUNTIES

	Rates	Fringes
CABLE SPLICER	$ 37.94	23.36
ELECTRICIAN	$ 34.49	23.36

ELEC0112-005 06/01/2015

ASOTIN, BENTON, COLUMBIA, FRANKLIN, GARFIELD, KITTITAS, WALLA WALLA, YAKIMA COUNTIES

	Rates	Fringes
CABLE SPLICER	$ 40.74	18.65
ELECTRICIAN	$ 38.80	18.59

ELEC0191-003 06/01/2014

ISLAND, SAN JUAN, SNOHOMISH, SKAGIT AND WHATCOM COUNTIES

	Rates	Fringes
CABLE SPLICER	$ 44.23	17.73
ELECTRICIAN	$ 40.21	17.73

ELEC0191-004 06/01/2014

CHELAN, DOUGLAS, GRANT AND OKANOGAN COUNTIES

	Rates	Fringes
CABLE SPLICER	$ 40.82	17.63
ELECTRICIAN	$ 37.11	17.63

Provided to Builders Exchange of WA, Inc. For usage Conditions Agreement see www.bxwa.com - Always Verify Scale

ENGI0302-003 06/01/2014

CHELAN (WEST OF THE 120TH MERIDIAN), CLALLAM, DOUGLAS (WEST OF THE 120TH MERIDIAN), GRAYS HARBOR, ISLAND, JEFFERSON, KING, KITSAP, KITTITAS, MASON, OKANOGAN (WEST OF THE 120TH MERIDIAN), SAN JUNA, SKAGIT, SNOHOMISH, WHATCOM AND YAKIMA (WEST OF THE 120TH MERIDIAN) COUNTIES

PROJECTS: CATEGORY A PROJECTS (EXCLUDES CATEGORY B PROJECTS, AS SHOWN BELOW)

Zone 1 (0-25 radius miles):

	Rates	Fringes
Power equipment operators:		
Group 1A	$ 38.39	17.39
Group 1AA	$ 38.96	17.39
Group 1AAA	$ 39.52	17.39
Group 1	$ 37.84	17.39
Group 2	$ 37.35	17.39
Group 3	$ 36.93	17.39
Group 4	$ 34.57	17.39

Zone Differential (Add to Zone 1 rates):
Zone 2 (26-45 radius miles) - $1.00
Zone 3 (Over 45 radius miles) - $1.30

BASEPOINTS: Aberdeen, Bellingham, Bremerton, Everett, Kent, Mount Vernon, Port Angeles, Port Townsend, Seattle, Shelton, Wenatchee, Yakima

POWER EQUIPMENT OPERATORS CLASSIFICATIONS

GROUP 1AAA - Cranes-over 300 tons, or 300 ft of boom (including jib with attachments)

GROUP 1AA - Cranes 200 to 300 tons, or 250 ft of boom (including jib with attachments); Tower crane over 175 ft in height, base to boom

GROUP 1A - Cranes, 100 tons thru 199 tons, or 150 ft of boom (including jib with attachments); Crane-overhead, bridge type, 100 tons and over; Tower crane up to 175 ft in height base to boom; Loaders-overhead, 8 yards and over; Shovels, excavator, backhoes-6 yards and over with attachments

GROUP 1 - Cableway; Cranes 45 tons thru 99 tons, under 150 ft of boom (including jib with attachments); Crane-overhead, bridge type, 45 tons thru 99 tons; Derricks on building work; Excavator, shovel, backhoes over 3 yards and under 6 yards; Hard tail end dump articulating off-road equipment 45 yards and over; Loader- overhead 6 yards to, but not including 8 yards; Mucking machine, mole, tunnel, drill and/or shield; Quad 9, HD 41, D-10; Remote control operator on rubber tired earth moving equipment; Rollagon; Scrapers-self propelled 45 yards and over; Slipform pavers; Transporters, all truck or track type

Provided to Builders Exchange of WA, Inc. For usage Conditions Agreement see www.bxwa.com - Always Verify Scale

GROUP 2 - Barrier machine (zipper); Batch Plant Operaor-Concrete; Bump Cutter; Cranes, 20 tons thru 44 tons with attachments; Crane-overhead, bridge type-20 tons through 44 tons; Chipper; Concrete Pump-truck mount with boom attachment; Crusher; Deck Engineer/Deck Winches (power); Drilling machine; Excavator, shovel, backhoe-3yards and under; Finishing Machine, Bidwell, Gamaco and similar equipment; Guardrail punch; Horizontal/directional drill operator; Loaders-overhead under 6 yards; Loaders-plant feed; Locomotives-all; Mechanics-all; Mixers-asphalt plant; Motor patrol graders-finishing; Piledriver (other than crane mount); Roto-mill,roto-grinder; Screedman, spreader, topside operator-Blaw Knox, Cedar Rapids, Jaeger, Caterpillar, Barbar Green; Scraper-self propelled, hard tail end dump, articulating off-road equipment-under 45 yards; Subgrade trimmer; Tractors, backhoes-over 75 hp; Transfer material service machine-shuttle buggy, blaw knox-roadtec; Truck crane oiler/driver-100 tons and over; Truck Mount portable conveyor; Yo Yo Pay dozer

GROUP 3 - Conveyors; Cranes-thru 19 tons with attachments; A-frame crane over 10 tons; Drill oilers-auger type, truck or crane mount; Dozers-D-9 and under; Forklift-3000 lbs. and over with attachments; Horizontal/directional drill locator; Outside hoists-(elevators and manlifts), air tuggers, strato tower bucket elevators; Hydralifts/boom trucks over 10 tons; Loader-elevating type, belt; Motor patrol grader-nonfinishing; Plant oiler- asphalt, crusher; Pumps-concrete; Roller, plant mix or multi-lift materials; Saws-concrete; Scrpers-concrete and carry-all; Service engineer-equipment; Trenching machines; Truck Crane Oiler/Driver under 100 tons; Tractors, backhoe 75 hp and under

GROUP 4 - Assistant Engineer; Bobcat; Brooms; Compressor; Concrete finish mahine-laser screed; Cranes-A frame-10 tons and under; Elevator and Manlift-permanent or shaft type; Gradechecker, Stakehop; Forklifts under 3000 lbs. with attachments; Hydralifts/boom trucks, 10 tons and under; Oil distributors, blower distribution and mulch seeding operator; Pavement breaker; Posthole digger, mechanical; Power plant; Pumps, water; Rigger and Bellman; Roller-other than plant mix; Wheel Tractors, farmall type; Shotcrete/gunite equipment operator

Provided to Builders Exchange of WA, Inc. For usage Conditions Agreement see www.bxwa.com - Always Verify Scale

Category B Projects: 95% of the basic hourly reate for each group plus full fringe benefits applicable to category A projects shall apply to the following projects. A Reduced rates may be paid on the following:

1. Projects involving work on structures such as buildings and bridges whose total value is less than $1.5 million excluding mechanical, electrical, and utility portions of the contract.

2. Projects of less than $1 million where no building is involved. Surfacing and paving included, but utilities excluded.

3. Marine projects (docks, wharfs, etc.) less than $150,000.

HANDLING OF HAZARDOUS WASTE MATERIALS:

Personnel in all craft classifications subject to working inside a federally designated hazardous perimeter shall be elgible for compensation in accordance with the following group schedule relative to the level of hazardous waste as outlined in the specific hazardous waste project site safety plan.

H-1 Base wage rate when on a hazardous waste site when not outfitted with protective clothing

H-2 Class "C" Suit - Base wage rate plus $ .25 per hour.

H-3 Class "B" Suit - Base wage rate plus $ .50 per hour.

H-4 Class "A" Suit - Base wage rate plus $ .75 per hour.

Zone Differential (Add to Zone 1 rates):
Zone 2 (26-45 radius miles) - $ .70
Zone 3 (Over 45 radius miles) - $1.00

BASEPOINTS: Aberdeen, Bellingham, Bremerton, Everett, Kent, Mount Vernon, Port Angeles, Port Townsend, Seattle, Shelton, Wenatchee, Yakima

Provided to Builders Exchange of WA, Inc. For usage Conditions Agreement see www.bxwa.com - Always Verify Scale

POWER EQUIPMENT OPERATORS CLASSIFICATIONS

GROUP 1AAA - Cranes-over 300 tons, or 300 ft of boom (including jib with attachments)

GROUP 1AA - Cranes 200 to 300 tons, or 250 ft of boom (including jib with attachments); Tower crane over 175 ft in height, base to boom

GROUP 1A - Cranes, 100 tons thru 199 tons, or 150 ft of boom (including jib with attachments); Crane-overhead, bridge type, 100 tons and over; Tower crane up to 175 ft in height base to boom; Loaders-overhead, 8 yards and over; Shovels, excavator, backhoes-6 yards and over with attachments

GROUP 1 - Cableway; Cranes 45 tons thru 99 tons, under 150 ft of boom (including jib with attachments); Crane-overhead, bridge type, 45 tons thru 99 tons; Derricks on building work; Excavator, shovel, backhoes over 3 yards and under 6 yards; Hard tail end dump articulating off-road equipment 45 yards and over; Loader- overhead 6 yards to, but not including 8 yards; Mucking machine, mole, tunnel, drill and/or shield; Quad 9, HD 41, D-10; Remote control operator on rubber tired earth moving equipment; Rollagon; Scrapers-self propelled 45 yards and over; Slipform pavers; Transporters, all truck or track type

GROUP 2 - Barrier machine (zipper); Batch Plant Operaor-Concrete; Bump Cutter; Cranes, 20 tons thru 44 tons with attachments; Crane-overhead, bridge type-20 tons through 44 tons; Chipper; Concrete Pump-truck mount with boom attachment; Crusher; Deck Engineer/Deck Winches (power); Drilling machine; Excavator, shovel, backhoe-3 yards and under; Finishing Machine, Bidwell, Gamaco and similar equipment; Guardrail punch; Horizontal/directional drill operator; Loaders-overhead under 6 yards; Loaders-plant feed; Locomotives-all; Mechanics-all; Mixers-asphalt plant; Motor patrol graders-finishing; Piledriver (other than crane mount); Roto-mill,roto-grinder; Screedman, spreader, topside operator-Blaw Knox, Cedar Rapids, Jaeger, Caterpillar, Barbar Green; Scraper-self propelled, hard tail end dump, articulating off-road equipment-under 45 yards; Subgrade trimmer; Tractors, backhoes-over 75 hp; Transfer material service machine-shuttle buggy, blaw knox-roadtec; Truck crane oiler/driver-100 tons and over; Truck Mount portable conveyor; Yo Yo Pay dozer

Provided to Builders Exchange of WA, Inc. For usage Conditions Agreement see www.bxwa.com - Always Verify Scale

GROUP 3 - Conveyors; Cranes-thru 19 tons with attachments; A-frame crane over 10 tons; Drill oilers-auger type, truck or crane mount; Dozers-D-9 and under; Forklift-3000 lbs. and over with attachments; Horizontal/directional drill locator; Outside hoists-(elevators and manlifts), air tuggers, strato tower bucket elevators; Hydralifts/boom trucks over 10 tons; Loader-elevating type, belt; Motor patrol grader-nonfinishing; Plant oiler- asphalt, crusher; Pumps-concrete; Roller, plant mix or multi-lift materials; Saws-concrete; Scrpers-concrete and carry-all; Service engineer-equipment; Trenching machines; Truck Crane Oiler/Driver under 100 tons; Tractors, backhoe 75 hp and under

GROUP 4 - Assistant Engineer; Bobcat; Brooms; Compressor; Concrete finish mahine-laser screed; Cranes-A frame-10 tons and under; Elevator and Manlift-permanent or shaft type; Gradechecker, Stakehop; Forklifts under 3000 lbs. with attachments; Hydralifts/boom trucks, 10 tons and under; Oil distributors, blower distribution and mulch seeding operator; Pavement breaker; Posthole digger, mechanical; Power plant; Pumps, water; Rigger and Bellman; Roller-other than plant mix; Wheel Tractors, farmall type; Shotcrete/gunite equipment operator

CATEGORY B PROJECTS: 95% OF THE BASIC HOURLY RATE FOR EACH GROUP PLUS FULL FRINGE BENEFITS APPLICABLE TO CATEGORY A PROJECTS SHALL APPLY TO THE FOLLOWING PROJECTS. REDUCED RATES MAY BE PAID ON THE FOLLOWING:

1. Projects involving work on structures such as buildings and bridges whose total value is less than $1.5 million excluding mechanical, electrical, and utility portions of the contract.
2. Projects of less than $1 million where no building is involved. Surfacing and paving including, but utilities excluded.
3. Marine projects (docks, wharfs, ect.) less than $150,000.

HANDLING OF HAZARDOUS WASTE MATERIALS: Personnel in all craft classifications subject to working inside a federally designed hazardous perimeter shall be elgible for compensation in accordance with the following group schedule relative to the level of hazardous waste as outlined in the specific hazardous waste project site safety plan.

H-1 Base wage rate when on a hazardous waste site when not outfitted with protective clothing.
H-2 Class "C" Suit - Base wage rate plus $.25 per hour.
H-3 Class "B" Suit - Base wage rate plus $.50 per hour.
H-4 Class "A" Suit - Base wage rate plus $.75 per hour.

Provided to Builders Exchange of WA, Inc. For usage Conditions Agreement see www.bxwa.com - Always Verify Scale

ENGI0370-002 06/01/2015

ADAMS, ASOTIN, BENTON, CHELAN (EAST OF THE 120TH MERIDIAN), COLUMBIA, DOUGLAS (EAST OF THE 120TH MERIDIAN), FERRY, FRANKLIN, GARFIELD, GRANT, LINCOLN, OKANOGAN (EAST OF THE 120TH MERIDIAN), PEND OREILLE, SPOKANE, STEVENS, WALLA WALLA, WHITMAN AND YAKIMA (EAST OF THE 120TH MERIDIAN) COUNTIES

ZONE 1:

	Rates	Fringes
POWER EQUIPMENT OPERATOR		
GROUP 1	$ 26.16	13.55
GROUP 2	$ 26.48	13.55
GROUP 3	$ 27.09	13.55
GROUP 4	$ 27.25	13.55
GROUP 5	$ 27.41	13.55
GROUP 6	$ 27.69	13.55
GROUP 7	$ 27.96	13.55
GROUP 8	$ 29.06	13.55

ZONE DIFFERENTIAL (Add to Zone 1 rate): Zone 2 - $2.00

Zone 1: Within 45 mile radius of Spokane, Pasco, Washington; Lewiston, Idaho

Zone 2: Outside 45 mile radius of Spokane, Pasco, Washington; Lewiston, Idaho

POWER EQUIPMENT OPERATORS CLASSIFICATIONS

GROUP 1: Bit Grinders; Bolt Threading Machine; Compressors (under 2000 CFM, gas, diesel, or electric power); Deck Hand; Fireman & Heater Tender; Hydro-seeder, Mulcher, Nozzleman; Oiler Driver, & Cable Tender, Mucking Machine; Pumpman; Rollers, all types on subgrade, including seal and chip coatings (farm type, Case, John Deere & similar, or Compacting Vibrator), except when pulled by Dozer with operable blade; Welding Machine; Crane Oiler-Driver (CLD required) & Cable Tender, Mucking Machine

Provided to Builders Exchange of WA, Inc. For usage Conditions Agreement see www.bxwa.com - Always Verify Scale

GROUP 2: A-frame Truck (single drum); Assistant Refrigeration Plant (under 1000 ton); Assistant Plant Operator, Fireman or Pugmixer (asphalt); Bagley or Stationary Scraper; Belt Finishing Machine; Blower Operator (cement); Cement Hog; Compressor (2000 CFM or over, 2 or more, gas diesel or electric power); Concrete Saw (multiple cut); Distributor Leverman; Ditch Witch or similar; Elevator Hoisting Materials; Dope Pots (power agitated); Fork Lift or Lumber Stacker, hydra-lift & similar; Gin Trucks (pipeline); Hoist, single drum; Loaders (bucket elevators and conveyors); Longitudinal Float; Mixer (portable-concrete); Pavement Breaker, Hydra-Hammer & similar; Power Broom; Railroad Ballast Regulation Operator (self-propelled); Railroad Power Tamper Operator (self-propelled); Railroad Tamper Jack Operator (self-propelled; Spray Curing Machine (concrete); Spreader Box (self-propelled); Straddle Buggy (Ross & similar on construction job only); Tractor (Farm type R/T with attachment, except Backhoe); Tugger Operator

GROUP 3: A-frame Truck (2 or more drums); Assistant Refrigeration Plant & Chiller Operator (over 1000 ton); Backfillers (Cleveland & similar); Batch Plant & Wet Mix Operator, single unit (concrete); Belt-Crete Conveyors with power pack or similar; Belt Loader (Kocal or similar); Bending Machine; Bob Cat (Skid Steer); Boring Machine (earth); Boring Machine (rock under 8 inch bit) (Quarry Master, Joy or similar); Bump Cutter (Wayne, Saginau or similar); Canal Lining Machine (concrete); Chipper (without crane); Cleaning & Doping Machine (pipeline); Deck Engineer; Elevating Belt-type Loader (Euclid, Barber Green & similar); Elevating Grader-type Loader (Dumor, Adams or similar); Generator Plant Engineers (diesel or electric); Gunnite Combination Mixer & Compressor; Locomotive Engineer; Mixermobile; Mucking Machine; Posthole Auger or Punch; Pump (grout or jet); Soil Stabilizer (P & H or similar); Spreader Machine; Dozer/Tractor (up to D-6 or equivalent) and Traxcavator; Traverse Finish Machine; Turnhead Operator

GROUP 4: Concrete Pumps (squeeze-crete, flow-crete, pump-crete, Whitman & similar); Curb Extruder (asphalt or concrete); Drills (churn, core, calyx or diamond); Equipment Serviceman; Greaser & Oiler; Hoist (2 or more drums or Tower Hoist); Loaders (overhead & front-end, under 4 yds. R/T); Refrigeration Plant Engineer (under 1000 ton); Rubber-tired Skidders (R/T with or without attachments); Surface Heater & Plant Machine; Trenching Machines (under 7 ft. depth capacity); Turnhead (with re-screening); Vacuum Drill (reverse circulation drill under 8 inch bit)

Provided to Builders Exchange of WA, Inc. For usage Conditions Agreement see www.bxwa.com - Always Verify Scale

GROUP 5: Backhoe (under 45,000 gw); Backhoe & Hoe Ram (under 3/4 yd.); Carrydeck & Boom Truck (under 25 tons); Cranes (25 tons & under), all attachments including clamshell, dragline; Derricks & Stifflegs (under 65 tons); Drilling Equipment(8 inch bit & over) (Robbins, reverse circulation & similar); Hoe Ram; Piledriving Engineers; Paving (dual drum); Railroad Track Liner Operaotr (self-propelled); Refrigeration Plant Engineer (1000 tons & over); Signalman (Whirleys, Highline Hammerheads or similar); Grade Checker

GROUP 6: Asphalt Plant Operator; Automatic Subgrader (Ditches & Trimmers)(Autograde, ABC, R.A. Hansen & similar on grade wire); Backhoe (45,000 gw and over to 110,000 gw); Backhoes & Hoe Ram (3/4 yd. to 3 yd.); Batch Plant (over 4 units); Batch & Wet Mix Operator (multiple units, 2 & incl. 4); Blade Operator (motor patrol & attachments); Cable Controller (dispatcher); Compactor (self-propelled with blade); Concrete Pump Boom Truck; Concrete Slip Form Paver; Cranes (over 25 tons, to and including 45 tons), all attachments including clamshell, dragline; Crusher, Grizzle & Screening Plant Operator; Dozer, 834 R/T & similar; Drill Doctor; Loader Operator (front-end & overhead, 4 yds. incl. 8 yds.); Multiple Dozer Units with single blade; Paving Machine (asphalt and concrete); Quad-Track or similar equipment; Rollerman (finishing asphalt pavement); Roto Mill (pavement grinder); Scrapers, all, rubber-tired; Screed Operator; Shovel(under 3 yds.); Trenching Machines (7 ft. depth & over); Tug Boat Operator Vactor guzzler, super sucker; Lime Batch Tank Operator (REcycle Train); Lime Brain Operator (Recycle Train); Mobile Crusher Operator (Recycle Train)

GROUP 7: Backhoe (over 110,000 gw); Backhoes & Hoe Ram (3 yds & over); Blade (finish & bluetop) Automatic, CMI, ABC, Finish Athey & Huber & similar when used as automatic; Cableway Operators; Concrete Cleaning/Decontamination machine operator; Cranes (over 45 tons to but not including 85 tons), all attachments including clamshell and dragine; Derricks & Stiffleys (65 tons & over); Elevating Belt (Holland type); Heavy equipment robotics operator; Loader (360 degrees revolving Koehring Scooper or similar); Loaders (overhead & front-end, over 8 yds. to 10 yds.); Rubber-tired Scrapers (multiple engine with three or more scrapers); Shovels (3 yds. & over); Whirleys & Hammerheads, ALL; H.D. Mechanic; H.D. Welder; Hydraulic Platform Trailers (Goldhofer, Shaurerly andSimilar); Ultra High Pressure Wateriet Cutting Tool System Operator (30,000 psi); Vacuum Blasting Machine Operator

Provided to Builders Exchange of WA, Inc. For usage Conditions Agreement see www.bxwa.com - Always Verify Scale

GROUP 8: Cranes (85 tons and over, and all climbing, overhead,rail and tower), all attachments including clamshell, dragline; Loaders (overhead and front-end, 10 yards and over); Helicopter Pilot

BOOM PAY: (All Cranes, Including Tower)
180 ft to 250 ft $ .50 over scale
Over 250 ft $ .80 over scale

NOTE:
In computing the length of the boom on Tower Cranes, they shall be measured from the base of the Tower to the point of the boom.

HAZMAT:
Anyone working on HAZMAT jobs, working with supplied air shall receive $1.00 an hour above classification.

ENGI0612-012 06/01/2014

LEWIS,PIERCE, PACIFIC (portion lying north of a parallel line extending west from the northern boundary of Wahkaikum County to the sea) AND THURSTON COUNTIES

ON PROJECTS DESCRIBED IN FOOTNOTE A BELOW, THE RATE FOR EACH GROUP SHALL BE 90% OF THE BASE RATE PLUS FULL FRINGE BENEFITS. ON ALL OTHER WORK, THE FOLLOWING RATES APPLY.

Zone 1 (0-25 radius miles):

	Rates	Fringes
POWER EQUIPMENT OPERATOR		
GROUP 1A	$ 38.39	17.40
GROUP 1AA	$ 38.96	17.40
GROUP 1AAA	$ 39.52	17.40
GROUP 1	$ 37.84	17.40
GROUP 2	$ 37.35	17.40
GROUP 3	$ 36.93	17.40
GROUP 4	$ 34.57	17.40

Zone Differential (Add to Zone 1 rates):
Zone 2 (26-45 radius miles) = $1.00
Zone 3 (Over 45 radius miles) - $1.30

BASEPOINTS: CENTRALIA, OLYMPIA, TACOMA

Provided to Builders Exchange of WA, Inc. For usage Conditions Agreement see www.bxwa.com - Always Verify Scale

POWER EQUIPMENT OPERATORS CLASSIFICATIONS

GROUP 1 AAA - Cranes-over 300 tons or 300 ft of boom (including jib with attachments)

GROUP 1AA - Cranes- 200 tonsto 300 tons, or 250 ft of boom (including jib with attachments; Tower crane over 175 ft in height, bas to boom

GROUP 1A - Cranes, 100 tons thru 199 tons, or 150 ft of boom (including jib with attachments); Crane-overhead, bridge type, 100 tons and over; Tower crane up to 175 ft in height base to boom; Loaders-overhead, 8 yards and over; Shovels, excavator, backhoes-6 yards and over with attachments

GROUP 1 - Cableway; Cranes 45 tons thru 99 tons under 150 ft of boom (including jib with attachments); Crane-overhead, bridge type, 45 tons thru 99 tons; Derricks on building work; Excavator, shovel, backhoes over 3 yards and under 6 yards; Hard tail end dump articulating off-road equipment 45 yards and over; Loader- overhead, 6 yards to, but not including, 8 yards; Mucking machine, mole, tunnel, drill and/or shield; Quad 9 HD 41, D-10; Remote control operator on rubber tired earth moving equipment; Rollagon; Scrapers-self-propelled 45 yards and over; Slipform pavers; Transporters, all track or truck type

GROUP 2 - Barrier machine (zipper); Batch Plant Operator-concrete; Bump Cutter; Cranes, 20 tons thru 44 tons with attachments; Crane-Overhead, bridge type, 20 tons through 44 tons; Chipper; Concrete pump-truck mount with boom attachment; Crusher; Deck engineer/deck winches (power); Drilling machine; Excavator, shovel, backhoe-3 yards and under; Finishing machine, Bidwell, Gamaco and similar equipment; Guardrail punch; Loaders, overhead under 6 yards; Loaders-plant feed; Locomotives-all; Mechanics- all; Mixers, asphalt plant; Motor patrol graders, finishing; Piledriver (other than crane mount); Roto-mill, roto-grinder; Screedman, spreader, topside operator-Blaw Knox, Cedar Rapids, Jaeger, Caterpillar, Barbar Green; Scraper-self- propelled, hard tail end dump, articulating off-road equipment- under 45 yards; Subgrader trimmer; Tractors, backhoe over 75 hp; Transfer material service machine-shuttle buggy, Blaw Knox- Roadtec; Truck Crane oiler/driver-100 tons and over; Truck Mount Portable Conveyor; Yo Yo pay

Provided to Builders Exchange of WA, Inc. For usage Conditions Agreement see www.bxwa.com - Always Verify Scale

GROUP 3 - Conveyors; Cranes through 19 tons with attachments; Crane-A-frame over 10 tons; Drill oilers-auger type, truck or crane mount; Dozer-D-9 and under; Forklift-3000 lbs. and over with attachments; Horizontal/directional drill locator; Outside Hoists-(elevators and manlifts), air tuggers, strato tower bucket elevators; Hydralifts/boom trucks over 10 tons; Loaders-elevating type, belt; Motor patrol grader-nonfinishing; Plant oiler- asphalt, crusher; Pump-Concrete; Roller, plant mix or multi-lfit materials; Saws-concrete; Scrapers, concrete and carry all; Service engineers-equipment; Trenching machines; Truck crane oiler/driver under 100 tons; Tractors, backhoe under 75 hp

GROUP 4 - Assistant Engineer; Bobcat; Brooms; Compressor; Concrete Finish Machine-laser screed; Cranes A-frame 10 tons and under; Elevator and manlift (permanent and shaft type); Forklifts-under 3000 lbs. with attachments; Gradechecker, stakehop; Hydralifts/boom trucks, 10 tons and under; Oil distributors, blower distribution and mulch seeding operator; Pavement breaker; Posthole digger-mechanical; Power plant; Pumps-water; Rigger and Bellman; Roller-other than plant mix; Wheel Tractors, farmall type; Shotcrete/gunite equipment operator

FOOTNOTE A- Reduced rates may be paid on the following:

1. Projects involving work on structures such as buildings and bridges whose total value is less than $1.5 million excluding mechanical, electrical, and utility portions of the contract.

2. Projects of less than $1 million where no building is involved. Surfacing and paving included, but utilities excluded.

3. Marine projects (docks, wharfs, etc.) less than $150,000.

HANDLING OF HAZARDOUS WASTE MATERIALS: Personnel in all craft classifications subject to working inside a federally designated hazardous perimeter shall be elgible for compensation in accordance with the following group schedule relative to the level of hazardous waste as outlined in the specific hazardous waste project site safety plan.

H-1 Base wage rate when on a hazardous waste site when not outfitted with protective clothing, Class "D" Suit - Base wage rate plus $ .50 per hour.
H-2 Class "C" Suit - Base wage rate plus $1.00 per hour.
H-3 Class "B" Suit - Base wage rate plus $1.50 per hour.
H-4 Class "A" Suit - Base wage rate plus $2.00 per hour.

Provided to Builders Exchange of WA, Inc. For usage Conditions Agreement see www.bxwa.com - Always Verify Scale

ENGI0701-002 01/01/2015

CLARK, COWLITZ, KLICKKITAT, PACIFIC (SOUTH), SKAMANIA, AND WAHKIAKUM COUNTIES

POWER RQUIPMENT OPERATORS: ZONE 1

	Rates	Fringes
POWER EQUIPMENT OPERATOR		
GROUP 1	$ 39.47	14.10
GROUP 1A	$ 41.44	14.10
GROUP 1B	$ 43.42	14.10
GROUP 2	$ 37.58	14.10
GROUP 3	$ 36.44	14.10
GROUP 4	$ 35.36	14.10
GROUP 5	$ 34.13	14.10
GROUP 6	$ 30.94	14.10

Zone Differential (add to Zone 1 rates):
Zone 2 - $3.00
Zone 3 - $6.00

Provided to Builders Exchange of WA, Inc. For usage Conditions Agreement see www.bxwa.com - Always Verify Scale

For the following metropolitan counties: MULTNOMAH; CLACKAMAS; MARION; WASHINGTON; YAMHILL; AND COLUMBIA; CLARK; AND COWLITZ COUNTY, WASHINGTON WITH MODIFICATIONS AS INDICATED:

All jobs or projects located in Multnomah, Clackamas and Marion Counties, West of the western boundary of Mt. Hood National Forest and West of Mile Post 30 on Interstate 84 and West of Mile Post 30 on State Highway 26 and West of Mile Post 30 on Highway 22 and all jobs or projects located in Yamhill County, Washington County and Columbia County and all jobs or porjects located in Clark & Cowlitz County, Washington except that portion of Cowlitz County in the Mt. St. Helens "Blast Zone" shall receive Zone I pay for all classifications.

All jobs or projects located in the area outside the identified boundary above, but less than 50 miles from the Portland City Hall shall receive Zone II pay for all classifications.

All jobs or projects located more than 50 miles from the Portland City Hall, but outside the identified border above, shall receive Zone III pay for all classifications.

For the following cities: ALBANY; BEND; COOS BAY; EUGENE; GRANTS PASS; KLAMATH FALLS; MEDFORD; ROSEBURG

All jobs or projects located within 30 miles of the respective city hall of the above mentioned cities shall receive Zone I pay for all classifications.

All jobs or projects located more than 30 miles and less than 50 miles from the respective city hall of the above mentioned cities shall receive Zone II pay for all classifications.

All jobs or projects located more than 50 miles from the respective city hall of the above mentioned cities shall receive Zone III pay for all classifications.

Provided to Builders Exchange of WA, Inc. For usage Conditions Agreement see www.bxwa.com - Always Verify Scale

POWER EQUIPMENT OPERATORS CLASSIFICATIONS

Group 1
Concrete Batch Plan and or Wet mix three (3) units or more; Crane, Floating one hundred and fifty (150) ton but less than two hundred and fifty (250) ton; Crane, two hundred (200) ton through two hundred ninety nine (299) ton with two hundred foot (200') boom or less (including jib, inserts and/or attachments); Crane, ninety (90) ton through one hundred ninety nine (199) ton with over two hundred (200') boom Including jib, inserts and/or attachments); Crane, Tower Crane with one hundred seventy five foot (175') tower or less and with less than two hundred foot (200') jib; Crane, Whirley ninety (90) ton and over; Helicopter when used in erecting work

Group 1A
Crane, floating two hundred fifty (250) ton and over; Crane, two hundred (200) ton through two hundred ninety nine (299) ton, with over two hundred foot (200') boom (including jib, inserts and/or attachments); Crane, three hundred (300) ton through three hundred ninety nine (399) ton; Crane, Tower Crane with over one hundred seventy five foot (175') tower or over two hundred foot (200') jib; Crane, tower Crane on rail system or 2nd tower or more in work radius

Group 1B
Crane, three hundred (300) ton through three hundred ninety nine (399) ton, with over two hundred foot (200') boom (including jib, inserts and/or attachments); Floating crane, three hundred fifty (350) ton and over; Crane, four hundred (400) ton and over

Group 2
Asphalt Plant (any type); Asphalt Roto-Mill, pavement profiler eight foot (8') lateral cut and over; Auto Grader or "Trimmer"; Blade, Robotic; Bulldozer, Robotic Equipment (any type); Bulldozer, over one hundred twenty thousand (120,000) lbs. and above; Concrete Batch Plant and/or Wet Mix one (1) and two (2) drum; Concrete Diamond Head Profiler; Canal Trimmer; Concrete, Automatic Slip Form Paver (Assistant to the Operator required); Crane, Boom Truck fifty (50) ton and with over one hundred fifty foot (150') boom and over; Crane, Floating (derrick barge) thirty (30) ton but less than one hundred fifty (150) ton; Crane, Cableway twenty-five (25) ton and over; Crane, Floating Clamshell three (3) cu. Yds. And over; Crane, ninety (90) ton through one hundred ninety nine (199) ton up to and including two hundred foot (200') of boom (including jib inserts and/or attachments); Crane, fifty (50) ton through eighty nine (89) ton with over one hundred fifty foot (150') boom (including jib inserts and/or attachments); Crane, Whirley under ninety (90) ton; Crusher Plant; Excavator over one hundred thirty thousand (130,000) lbs.; Loader one hundred twenty thousand (120,000) lbs. and above; Remote Controlled Earth Moving Equipment; Shovel, Dragline, Clamshell, five (5) cu. Yds. And over; Underwater Equipment remote or otherwise, when used in construction work; Wheel Excavator any size

Provided to Builders Exchange of WA, Inc. For usage Conditions Agreement see www.bxwa.com - Always Verify Scale

Group 3
Bulldozer, over seventy thousand (70,000) lbs. up to and including one hundred twenty thousand (120,000) lbs.; Crane, Boom Truck fifty (50) ton and over with less than one hundred fifty foot (150') boom; Crane, fifty (50) ton through eighty nine (89) ton with one hundred fifty foot (150') boom or less (including jib inserts and/or attachments); Crane, Shovel, Dragline or Clamshell three (3) cu. yds. but less than five (5) cu. Yds.; Excavator over eighty thousand (80,000) lbs. through one hundred thirty thousand (130,000) lbs.; Loader sixty thousand (60,000) lbs. and less than one hundred twenty thousand (120,000) lbs.

Group 4
Asphalt, Screed; Asphalt Paver; Asphalt Roto-Mill, pavement profiler, under eight foot (8') lateral cut; Asphalt, Material Transfer Vehicle Operator; Back Filling Machine; Backhoe, Robotic, track and wheel type up to and including twenty thousand (20,000) lbs. with any attachments; Blade (any type); Boatman; Boring Machine; Bulldozer over twenty thousand (20,000) lbs. and more than one hundred (100) horse up to seventy thousand (70,000) lbs.; Cable-Plow (any type); Cableway up to twenty five (25) ton; Cat Drill (John Henry); Chippers; Compactor, multi-engine; Compactor, Robotic; Compactor with blade self-propelled; Concrete, Breaker; Concrete, Grout Plant; Concrete, Mixer Mobile; Concrete, Paving Road Mixer; Concrete, Reinforced Tank Banding Machine; Crane, Boom Truck twenty (20) ton and under fifty (50) ton; Crane, Bridge Locomotive, Gantry and Overhead; Crane, Carry Deck; Crane, Chicago Boom and similar types; Crane, Derrick Operator, under one hundred (100) ton; Crane, Floating Clamshell, Dragline, etc. Operator, under three (3) cu. yds. Or less than thirty (30) ton; Crane, under fifty (50) ton; Crane, Quick Tower under one hundred foot (100') in height and less than one hundred fifty foot (150') jib (on rail included); Diesel-Electric Engineer (Plant or Floating); Directional Drill over twenty thousand (20,000) lbs. pullback; Drill Cat Operator; Drill Doctor and/or Bit Grinder; Driller, Percussion, Diamond, Core, Cable, Rotary and similar type; Excavator Operator over twenty thousand (20,000) lbs. through eighty thousand (80,000) lbs.; Generator Operator; Grade-all; Guardrail Machines, i.e. punch, auger, etc.; Hammer Operator (Piledriver); Hoist, stiff leg, guy derrick or similar type, fifty (50) ton and over; Hoist, two (2) drums or more; Hydro Axe (loader mounted or similar type); Jack Operator, Elevating Barges, Barge Operator, self-unloading; Loader Operator, front end and overhead, twenty five thousand (25,000) lbs. and less than sixty thousand (60,000) lbs.; Log Skidders; Piledriver Operator (not crane type); Pipe, Bending, Cleaning, Doping and Wrapping Machines; Rail, Ballast Tamper Multi-Purpose; Rubber-tired Dozers and Pushers; Scraper, all types; Side-Boom; Skip Loader, Drag Box; Strump Grinder (loader mounted or similar type); Surface Heater and Planer; Tractor, rubber-tired, over fifty (50) HP Flywheel; Trenching Machine three foot (3') depth and deeper; Tub Grinder (used for wood debris);

Provided to Builders Exchange of WA, Inc. For usage Conditions Agreement see www.bxwa.com - Always Verify Scale

Tunnel Boring Machine Mechanic; Tunnel, Mucking Machine; Ultra High Pressure Water Jet Cutting Tool System Operator; Vacuum Blasting Machine Operator; Water pulls, Water wagons

Group 5

Asphalt, Extrusion Machine; Asphalt, Roller (any asphalt mix); Asphalt, Roto-Mill pavement profiler ground man; Bulldozer, twenty thousand (20,000) lbs. or less, or one hundred (100) horse or less; Cement Pump; Chip Spreading Machine; Churn Drill and Earth Boring Machine; Compactor, self-propelled without blade; Compressor, (any power) one thousand two hundred fifty (1,250) cu. ft. and over, total capacity; Concrete, Batch Plant Quality control; Concrete, Combination Mixer and compressor operator, gunite work; Concrete, Curb Machine, Mechanical Berm, Curb and/or Curb and Gutter; Concrete, Finishing Machine; Concrete, Grouting Machine; Concrete, Internal Full Slab Vibrator Operator; Concrete, Joint Machine; Concrete, Mixer single drum, any capacity; Concrete, Paving Machine eight foot (8') or less; Concrete, Planer; Concrete, Pump; Concrete, Pump Truck; Concrete, Pumpcrete Operator (any type); Concrete, Slip Form Pumps, power driven hydraulic lifting device for concrete forms; Conveyored Material Hauler; Crane, Boom Truck under twenty (20) tons; Crane, Boom Type lifting device, five (5) ton capacity or less; Drill, Directional type less than twenty thousand (20,000) lbs. pullback; Fork Lift, over ten (10) ton or Robotic; Helicopter Hoist; Hoist Operator, single drum; Hydraulic Backhoe track type up to and including twenty thousand (20,000) lbs.; Hydraulic Backhoe wheel type (any make); Laser Screed; Loaders, rubber-tired type, less than twenty five thousand (25,000) lbs.; Pavement Grinder and/or Grooving Machine (riding type); Pipe, cast in place Pipe Laying Machine; Pulva-Mixer or similar types; Pump Operator, more than five (5) pumps (any size); Rail, Ballast Compactor, Regulator, or Tamper machines; Service Oiler (Greaser); Sweeper Self-Propelled; Tractor, Rubber-Tired, fifty (50) HP flywheel and under; Trenching Machine Operator, maximum digging capacity three foot (3') depth; Tunnel, Locomotive, Dinkey; Tunnel, Power Jumbo setting slip forms, etc.

Group 6

Asphalt, Pugmill (any type); Asphalt, Raker; Asphalt, Truck Mounted Asphalt Spreader, with Screed; Auger Oiler; Boatman; Bobcat, skid steed (less than one (1) yard); Broom, self-propelled; Compressor Operator (any power) under 1,250 cu. ft. total capacity; Concrete Curing Machine (riding type); Concrete Saw; Conveyor Operator or Assistant; Crane, Tugger; Crusher Feederman; Crusher Oiler; Deckhand; Drill, Directional Locator; Fork Lift; Grade Checker; Guardrail Punch Oiler; Hydrographic Seeder Machine, straw, pulp or seed; Hydrostatic Pump Operator; Mixer Box (CTB, dry batch, etc.); Oiler; Plant Oiler; Pump (any power); Rail, Brakeman, Switchman, Motorman; Rail, Tamping Machine, mechanical, self-propelled; Rigger; Roller grading (not asphalt); Truck, Crane Oiler-Driver

---

Provided to Builders Exchange of WA, Inc. For usage Conditions Agreement see www.bxwa.com - Always Verify Scale

IRON0014-005 07/01/2015

ADAMS, ASOTIN, BENTON, COLUMBIA, DOUGLAS, FERRY, FRANKLIN, GARFIELD, GRANT, LINCOLN, OKANOGAN, PEND ORIELLE, SPOKANE, STEVENS, WALLA WALLA AND WHITMAN COUNTIES

	Rates	Fringes
IRONWORKER	$ 32.76	23.19

IRON0029-002 07/01/2015

CLARK, COWLITZ, KLICKITAT, PACIFIC, SKAMANIA, AND WAHKAIKUM COUNTIES

	Rates	Fringes
IRONWORKER	$ 34.12	23.04

IRON0086-002 07/01/2015

YAKIMA, KITTITAS AND CHELAN COUNTIES

	Rates	Fringes
IRONWORKER	$ 32.76	23.19

IRON0086-004 07/01/2015

CLALLAM, GRAYS HARBOR, ISLAND, JEFFERSON, KING, KITSAP, LEWIS, MASON, PIERCE, SKAGIT, SNOHOMISH, THURSTON, AND WHATCOM COUNTIES

	Rates	Fringes
IRONWORKER	$ 40.04	23.19

Provided to Builders Exchange of WA, Inc. For usage Conditions Agreement see www.bxwa.com - Always Verify Scale

LABO0001-002 06/01/2014

ZONE 1:

	Rates	Fringes
Laborers:		
CALLAM, GRAYS HARBOR, ISLAND, JEFFERSON, KING, KITSAP, LEWIS, MASON, PACIFIC (NORTH OF STRAIGHT LINE MADE BY EXTENDING THE NORTH BOUNDARY WAHKIAKUM COUNTY WEST TO THE PACIFIC OCEAN), PIERCE, SAN JUAN,SKAGIT, SNOHOMISH,THURSTON AND WHATCOM COUNTIES		
GROUP 1	$ 22.49	10.30
GROUP 2	$ 25.79	10.30
GROUP 3	$ 32.29	10.30
GROUP 4	$ 33.08	10.30
GROUP 5	$ 33.62	10.30
CHELAN, DOUGLAS (WEST OF THE 120TH MERIDIAN), KITTITAS AND YAKIMA COUNTIES		
GROUP 1	$ 18.95	10.30
GROUP 2	$ 21.76	10.30
GROUP 3	$ 23.85	10.30
GROUP 4	$ 24.43	10.30
GROUP 5	$ 24.85	10.30

BASE POINTS: BELLINGHAM, MT. VERNON, EVERETT, SEATTLE, KENT, TACOMA, OLYMPIA, CENTRALIA, ABERDEEN, SHELTON, PT. TOWNSEND, PT. ANGELES, AND BREMERTON

ZONE 1 - Projects within 25 radius miles of the respective city hall
ZONE 2 - More than 25 but less than 45 radius miles from the respective city hall
ZONE 3 - More than 45 radius miles from the respective city hall

ZONE DIFFERENTIAL (ADD TO ZONE 1 RATES):
ZONE 2 - $1.00
ZONE 3 - $1.30

BASE POINTS: CHELAN, SUNNYSIDE, WENATCHEE, AND YAKIMA

ZONE 1 - Projects within 25 radius miles of the respective city hall
ZONE 2 - More than 25 radius miles from the respective city hall

ZONE DIFFERENTIAL (ADD TO ZONE 1 RATES):
ZONE 2 - $2.25

Provided to Builders Exchange of WA, Inc. For usage Conditions Agreement see www.bxwa.com - Always Verify Scale

LABORERS CLASSIFICATIONS

GROUP 1: Landscaping and Planting; Watchman; Window Washer/Cleaner (detail clean-up, such as but not limited to cleaning floors, ceilings, walls, windows, etc., prior to final acceptance by the owner)

GROUP 2: Batch Weighman; Crusher Feeder; Fence Laborer; Flagman; Pilot Car

GROUP 3: General Laborer; Air, Gas, or Electric Vibrating Screed; Asbestos Abatement Laborer; Ballast Regulator Machine; Brush Cutter; Brush Hog Feeder; Burner; Carpenter Tender; Cement Finisher Tender; Change House or Dry Shack; Chipping Gun (under 30 lbs.); Choker Setter; Chuck Tender; Clean-up Laborer; Concrete Form Stripper; Curing Laborer; Demolition (wrecking and moving including charred material); Ditch Digger; Dump Person; Fine Graders; Firewatch; Form Setter; Gabian Basket Builders; Grout Machine Tender; Grinders; Guardrail Erector; Hazardous Waste Worker (Level C: uses a chemical "splash suit" and air purifying respirator); Maintenance Person; Material Yard Person; Pot Tender; Rip Rap Person; Riggers; Scale Person; Sloper Sprayer; Signal Person; Stock Piler; Stake Hopper; Toolroom Man (at job site); Topper-Tailer; Track Laborer; Truck Spotter; Vinyl Seamer

GROUP 4: Cement Dumper-Paving; Chipping Gun (over 30 lbs.); Clary Power Spreader; Concrete Dumper/Chute Operator; Concrete Saw Operator; Drill Operator (hydraulic, diamond, aiartrac); Faller and Bucker Chain Saw; Grade Checker and Transit Person; Groutmen (pressure) including post tension beams; Hazardous Waste Worker (Level B: uses same respirator protection as Level A. A supplied air line is provided in conjunction with a chemical "splash suit"); High Scaler; Jackhammer; Laserbeam Operator; Manhole Builder-Mudman; Nozzleman (concrete pump, green cutter when using combination of high pressure air and water on concrete and rock, sandblast, gunite, shotcrete, water blaster, vacuum blaster); Pavement Breaker; Pipe Layer and Caulker; Pipe Pot Tender; Pipe Reliner (not insert type); Pipe Wrapper; Power Jacks; Railroad Spike Puller-Power; Raker-Asphalt; Rivet Buster; Rodder; Sloper (over 20 ft); Spreader (concrete); Tamper and Similar electric, air and glas operated tool; Timber Person-sewer (lagger shorer and cribber); Track Liner Power; Tugger Operator; Vibrator; Well Point Laborer

GROUP 5: Caisson Worker; Miner; Mortarman and Hodcarrier; Powderman; Re-Timberman; Hazardous Waste Worker (Level A: utilizes a fully encapsulated suit with a self-contained breathing apparatus or a supplied air line).

Provided to Builders Exchange of WA, Inc. For usage Conditions Agreement see www.bxwa.com - Always Verify Scale

LABO0238-004 06/01/2014

PASCO AREA: ADAMS, BENTON, COLUMBIA,DOUGLAS (East of 120th Meridian), FERRY, FRANKLIN, GRANT, OKANOGAN, WALLA WALLA

SPOKANE AREA: ASOTIN, GARFIELD, LINCOLN, PEND OREILLE, SPOKANE, STEVENS & WHITMAN COUNTIES

	Rates	Fringes
LABORER (PASCO)		
GROUP 1	$ 22.25	10.95
GROUP 2	$ 24.35	10.95
GROUP 3	$ 24.62	10.95
GROUP 4	$ 24.89	10.95
GROUP 5	$ 25.17	10.95
LABORER (SPOKANE)		
GROUP 1	$ 21.95	10.95
GROUP 2	$ 24.05	10.95
GROUP 3	$ 24.32	10.95
GROUP 4	$ 24.59	10.95
GROUP 5	$ 24.87	10.95

Zone Differential (Add to Zone 1 rate): $2.00

BASE POINTS: Spokane, Pasco, Lewiston

Zone 1: 0-45 radius miles from the main post office.
Zone 2: 45 radius miles and over from the main post office.

Provided to Builders Exchange of WA, Inc. For usage Conditions Agreement see www.bxwa.com - Always Verify Scale

LABORERS CLASSIFICATIONS

GROUP 1: Flagman; Landscape Laborer; Scaleman; Traffic Control Maintenance Laborer (to include erection and maintenance of barricades, signs and relief of flagperson); Window Washer/Cleaner (detail cleanup, such as, but not limited to cleaning floors, ceilings, walls, windows, etc. prior to final acceptance by the owner)

GROUP 2: Asbestos Abatement Worker; Brush Hog Feeder; Carpenter Tender; Cement Handler; Clean-up Laborer; Concrete Crewman (to include stripping of forms, hand operating jacks on slip form construction, application of concrete curing compounds, pumpcrete machine, signaling, handling the nozzle of squeezcrete or similar machine,6 inches and smaller); Confined Space Attendant; Concrete Signalman; Crusher Feeder; Demolition (to include clean-up, burning, loading, wrecking and salvage of all material); Dumpman; Fence Erector; Firewatch; Form Cleaning Machine Feeder, Stacker; General Laborer; Grout Machine Header Tender; Guard Rail (to include guard rails, guide and reference posts, sign posts, and right-of-way markers); Hazardous Waste Worker, Level D (no respirator is used and skin protection is minimal); Miner, Class "A" (to include all bull gang, concrete crewman, dumpman and pumpcrete crewman, including distributing pipe, assembly & dismantle, and nipper); Nipper; Riprap Man; Sandblast Tailhoseman; Scaffold Erector (wood or steel); Stake Jumper; Structural Mover (to include separating foundation, preparation, cribbing, shoring, jacking and unloading of structures); Tailhoseman (water nozzle); Timber Bucker and Faller (by hand); Track Laborer (RR); Truck Loader; Well-Point Man; All Other Work Classifications Not Specially Listed Shall Be Classified As General Laborer

GROUP 3: Asphalt Roller, walking; Cement Finisher Tender; Concrete Saw, walking; Demolition Torch; Dope Pot Firemen, non-mechanical; Driller Tender (when required to move and position machine); Form Setter, Paving; Grade Checker using level; Hazardous Waste Worker, Level C (uses a chemical "splash suit" and air purifying respirator); Jackhammer Operator; Miner, Class "B" (to include brakeman, finisher, vibrator, form setter); Nozzleman (to include squeeze and flo-crete nozzle); Nozzleman, water, air or steam; Pavement Breaker (under 90 lbs.); Pipelayer, corrugated metal culvert; Pipelayer, multi- plate; Pot Tender; Power Buggy Operator; Power Tool Operator, gas, electric, pneumatic; Railroad Equipment, power driven, except dual mobile power spiker or puller; Railroad Power Spiker or Puller, dual mobile; Rodder and Spreader; Tamper (to include operation of Barco, Essex and similar tampers); Trencher, Shawnee; Tugger Operator; Wagon Drills; Water Pipe Liner; Wheelbarrow (power driven)

Provided to Builders Exchange of WA, Inc. For usage Conditions Agreement see www.bxwa.com - Always Verify Scale

GROUP 4: Air and Hydraulic Track Drill; Aspahlt Raker;Brush Machine (to include horizontal construction joint cleanup brush machine, power propelled); Caisson Worker, free air; Chain Saw Operator and Faller; Concrete Stack (to include laborers when laborers working on free standing concrete stacks for smoke or fume control above 40 feet high); Gunite (to include operation of machine and nozzle); Hazardous Waste Worker, Level B (uses same respirator protection as Level A. A supplied air line is provided in conjunction with a chemical "splash suit"); High Scaler; Laser Beam Operator (to include grade checker and elevation control); Miner, Class C (to include miner, nozzleman for concrete, laser beam operator and rigger on tunnels); Monitor Operator (air track or similar mounting); Mortar Mixer; Nozzleman (to include jet blasting nozzleman, over 1,200 lbs., jet blast machine power propelled, sandblast nozzle); Pavement Breaker (90 lbs. and over); Pipelayer (to include working topman, caulker, collarman, jointer, mortarman, rigger, jacker, shorer, valve or meter installer); Pipewrapper; Plasterer Tender; Vibrators (all)

GROUP 5 - Drills with Dual Masts; Hazardous Waste Worker, Level A (utilizes a fully encapsulated suit with a self-contained breathing apparatus or a supplied air line); Miner Class "D", (to include raise and shaft miner, laser beam operator on riases and shafts)

LABO0238-006 06/01/2014

COUNTIES EAST OF THE 120TH MERIDIAN: ADAMS, ASOTIN, BENTON, CHELAN, COLUMBIA, DOUGLAS, FERRY, FRANKLIN, GARFIELD, GRANT, LINCOLN, OKANOGAN, PEND OREILLE, STEVENS, SPOKANE, WALLA WALLA, WHITMAN

	Rates	Fringes
Hod Carrier	$ 24.32	10.95

LABO0335-001 06/01/2013

CLARK, COWLITZ, KLICKITAT, PACIFIC (SOUTH OF A STRAIGHT LINE MADE BY EXTENDING THE NORTH BOUNDARY LINE OF WAHKIAKUM COUNTY WEST TO THE PACIFIC OCEAN), SKAMANIA AND WAHKIAKUM COUNTIES

	Rates	Fringes
Laborers:		
ZONE 1:		
GROUP 1	$ 28.65	10.05
GROUP 2	$ 29.25	10.05
GROUP 3	$ 29.69	10.05
GROUP 4	$ 30.07	10.05
GROUP 5	$ 26.15	10.05
GROUP 6	$ 23.73	10.05
GROUP 7	$ 20.53	10.05

Provided to Builders Exchange of WA, Inc. For usage Conditions Agreement see www.bxwa.com - Always Verify Scale

Zone Differential (Add to Zone 1 rates):
Zone 2 $ 0.65
Zone 3 - 1.15
Zone 4 - 1.70
Zone 5 - 2.75

BASE POINTS: GOLDENDALE, LONGVIEW, AND VANCOUVER

ZONE 1: Projects within 30 miles of the respective city all.
ZONE 2: More than 30 miles but less than 40 miles from the respective city hall.
ZONE 3: More than 40 miles but less than 50 miles from the respective city hall.
ZONE 4: More than 50 miles but less than 80 miles from the respective city hall.
ZONE 5: More than 80 miles from the respective city hall.

LABORERS CLASSIFICATIONS

GROUP 1: Asphalt Plant Laborers; Asphalt Spreaders; Batch Weighman; Broomers; Brush Burners and Cutters; Car and Truck Loaders; Carpenter Tender; Change-House Man or Dry Shack Man; Choker Setter; Clean-up Laborers; Curing, Concrete; Demolition, Wrecking and Moving Laborers; Dumpers, road oiling crew; Dumpmen (for grading crew); Elevator Feeders; Median Rail Reference Post, Guide Post, Right of Way Marker; Fine Graders; Fire Watch; Form Strippers (not swinging stages); General Laborers; Hazardous Waste Worker; Leverman or Aggregate Spreader (Flaherty and similar types); Loading Spotters; Material Yard Man (including electrical); Pittsburgh Chipper Operator or Similar Types; Railroad Track Laborers; Ribbon Setters (including steel forms); Rip Rap Man (hand placed); Road Pump Tender; Sewer Labor; Signalman; Skipman; Slopers; Spraymen; Stake Chaser; Stockpiler; Tie Back Shoring; Timber Faller and Bucker (hand labor); Toolroom Man (at job site); Tunnel Bullgang (above ground); Weight-Man- Crusher (aggregate when used)

GROUP 2: Applicator (including pot power tender for same), applying protective material by hand or nozzle on utility lines or storage tanks on project; Brush Cutters (power saw); Burners; Choker Splicer; Clary Power Spreader and similar types; Clean- up Nozzleman-Green Cutter (concrete, rock, etc.); Concrete Power Buggyman; Concrete Laborer; Crusher Feeder; Demolition and Wrecking Charred Materials; Gunite Nozzleman Tender; Gunite or Sand Blasting Pot Tender; Handlers or Mixers of all Materials of an irritating nature (including cement and lime); Tool Operators (includes but not limited to: Dry Pack Machine; Jackhammer; Chipping Guns; Paving Breakers); Pipe Doping and Wrapping; Post Hole Digger, air, gas or electric; Vibrating Screed; Tampers; Sand Blasting (Wet); Stake-Setter; Tunnel-Muckers, Brakemen, Concrete Crew, Bullgang (underground)

Provided to Builders Exchange of WA, Inc. For usage Conditions Agreement see www.bxwa.com - Always Verify Scale

GROUP 3: Asbestos Removal; Bit Grinder; Drill Doctor; Drill Operators, air tracks, cat drills, wagon drills, rubber-mounted drills, and other similar types including at crusher plants; Gunite Nozzleman; High Scalers, Strippers and Drillers (covers work in swinging stages, chairs or belts, under extreme conditions unusual to normal drilling, blasting, barring-down, or sloping and stripping); Manhole Builder; Powdermen; Concrete Saw Operator; Pwdermen; Power Saw Operators (Bucking and Falling); Pumpcrete Nozzlemen; Sand Blasting (Dry); Sewer Timberman; Track Liners, Anchor Machines, Ballast Regulators, Multiple Tampers, Power Jacks, Tugger Operator; Tunnel-Chuck Tenders, Nippers and Timbermen; Vibrator; Water Blaster

GROUP 4: Asphalt Raker; Concrete Saw Operator (walls); Concrete Nozzelman; Grade Checker; Pipelayer; Laser Beam (pipelaying)-applicable when employee assigned to move, set up, align; Laser Beam; Tunnel Miners; Motorman-Dinky Locomotive-Tunnel; Powderman-Tunnel; Shield Operator-Tunnel

GROUP 5: Traffic Flaggers

GROUP 6: Fence Builders

GROUP 7: Landscaping or Planting Laborers

LABO0335-019 09/01/2013

	Rates	Fringes
Hod Carrier	$ 30.47	10.05

PAIN0005-002 07/01/2015

STATEWIDE EXCEPT CLARK, COWLITZ, KLICKITAT, PACIFIC (SOUTH), SKAMANIA, AND WAHKIAKUM COUNTIES

	Rates	Fringes
Painters:		
STRIPERS	$ 27.44	14.09

PAIN0005-004 03/01/2009

CLALLAM, GRAYS HARBOR, ISLAND, JEFFERSON, KING, KITSAP, LEWIS, MASON, PIERCE, SAN JUAN, SKAGIT, SNOHOMISH, THURSTON AND WHATCOM COUNTIES

	Rates	Fringes
PAINTER	$ 20.82	7.44

Provided to Builders Exchange of WA, Inc. For usage Conditions Agreement see www.bxwa.com - Always Verify Scale

PAIN0005-006 07/01/2015

ADAMS, ASOTIN; BENTON AND FRANKLIN (EXCEPT HANFORD SITE); CHELAN, COLUMBIA, DOUGLAS, FERRY, GARFIELD, GRANT, KITTITAS, LINCOLN, OKANOGAN, PEND OREILLE, SPOKANE, STEVENS, WALLA WALLA, WHITMAN AND YAKIMA COUNTIES

	Rates	Fringes
PAINTER		
Application of Cold Tar Products, Epoxies, Polyure thanes, Acids, Radiation Resistant Material, Water and Sandblasting	$ 28.15	10.85
Over 30'/Swing Stage Work	$ 22.20	7.98
Brush, Roller, Striping, Steam-cleaning and Spray	$ 23.05	10.85
Lead Abatement, Asbestos Abatement	$ 21.50	7.98

*$.70 shall be paid over and above the basic wage rates listed for work on swing stages and high work of over 30 feet.

PAIN0055-003 10/01/2015

CLARK, COWLITZ, KLICKITAT, PACIFIC, SKAMANIA, AND WAHKIAKUM COUNTIES

	Rates	Fringes
PAINTER		
Brush & Roller	$ 22.97	9.85
High work - All work 60 ft. or higher	$ 23.72	9.85
Spray and Sandblasting	$ 23.57	9.85

PAIN0055-006 11/01/2014

CLARK, COWLITZ, KLICKITAT, SKAMANIA and WAHKIAKUM COUNTIES

	Rates	Fringes
Painters:		
HIGHWAY & PARKING LOT STRIPER	$ 33.43	11.08

Provided to Builders Exchange of WA, Inc. For usage Conditions Agreement see www.bxwa.com - Always Verify Scale

PLAS0072-004 06/01/2015

ADAMS, ASOTIN, BENTON, CHELAN, COLUMBIA, DOUGLAS, FERRY, FRANKLIN, GARFIELD, GRANT, KITTITAS, LINCOLN, OKANOGAN, PEND OREILLE, SPOKANE, STEVENS, WALLA WALLA, WHITMAN, AND YAKIMA COUNTIES

	Rates	Fringes
CEMENT MASON/CONCRETE FINISHER		
ZONE 1	$ 27.01	12.59

Zone Differential (Add to Zone 1 rate): Zone 2 - $2.00

BASE POINTS: Spokane, Pasco, Lewiston; Wenatchee
Zone 1: 0 - 45 radius miles from the main post office
Zone 2: Over 45 radius miles from the main post office

PLAS0528-001 06/01/2015

CLALLAM, COWLITZ, GRAYS HARBOR, ISLAND, JEFFERSON, KING, KITSAP, LEWIS, MASON, PACIFIC, PIERCE, SAN JUAN, SKAGIT, SNOHOMISH, THURSTON, WAHKIAKUM AND WHATCOM COUNTIES

	Rates	Fringes
CEMENT MASON		
CEMENT MASON	$ 38.52	15.43
COMPOSITION, TROWEL MACHINE, GRINDER, POWER TOOLS, GUNNITE NOZZLE	$ 39.02	15.43
TROWLING MACHINE OPERATOR ON COMPOSITION	$ 39.02	15.43

PLAS0555-002 06/01/2015

CLARK, KLICKITAT AND SKAMANIA COUNTIES

ZONE 1:

	Rates	Fringes
CEMENT MASON		
CEMENT MASONS DOING BOTH COMPOSITION/POWER MACHINERY AND SUSPENDED/HANGING SCAFFOLD	$ 30.58	18.18
CEMENT MASONS ON SUSPENDED, SWINGING AND/OR HANGING SCAFFOLD	$ 30.58	18.18
CEMENT MASONS	$ 29.98	18.18
COMPOSITION WORKERS AND POWER MACHINERY OPERATORS	$ 31.18	18.18

Provided to Builders Exchange of WA, Inc. For usage Conditions Agreement see www.bxwa.com - Always Verify Scale

Zone Differential (Add To Zone 1 Rates):
Zone 2 - $0.65
Zone 3 - 1.15
Zone 4 - 1.70
Zone 5 - 3.00

BASE POINTS: BEND, CORVALLIS, EUGENE, MEDFORD, PORTLAND, SALEM, THE DALLES, VANCOUVER

ZONE 1: Projects within 30 miles of the respective city hall
ZONE 2: More than 30 miles but less than 40 miles from the respective city hall.
ZONE 3: More than 40 miles but less than 50 miles from the respective city hall.
ZONE 4: More than 50 miles but less than 80 miles from the respective city hall.
ZONE 5: More than 80 miles from the respective city hall

TEAM0037-002 06/01/2014

CLARK, COWLITZ, KLICKITAT, PACIFIC (South of a straight line made by extending the north boundary line of Wahkiakum County west to the Pacific Ocean), SKAMANIA, AND WAHKIAKUM COUNTIES

	Rates	Fringes
Truck drivers:		
ZONE 1		
GROUP 1	$ 26.90	14.37
GROUP 2	$ 27.02	14.37
GROUP 3	$ 27.15	14.37
GROUP 4	$ 27.41	14.37
GROUP 5	$ 27.63	14.37
GROUP 6	$ 27.79	14.37
GROUP 7	$ 27.99	14.37

Zone Differential (Add to Zone 1 Rates):
Zone 2 - $0.65
Zone 3 - 1.15
Zone 4 - 1.70
Zone 5 - 2.75

BASE POINTS: ASTORIA, THE DALLES, LONGVIEW AND VANCOUVER

ZONE 1: Projects within 30 miles of the respective city hall.
ZONE 2: More than 30 miles but less than 40 miles from the respective city hall.
ZONE 3: More than 40 miles but less than 50 miles from the respective city hall.
ZONE 4: More than 50 miles but less than 80 miles from the respective city hall.
ZONE 5: More than 80 miles from the respective city hall.

Provided to Builders Exchange of WA, Inc. For usage Conditions Agreement see www.bxwa.com - Always Verify Scale

TRUCK DRIVERS CLASSIFICATIONS

GROUP 1: A Frame or Hydra lifrt truck w/load bearing surface; Articulated Dump Truck; Battery Rebuilders; Bus or Manhaul Driver; Concrete Buggies (power operated); Concrete Pump Truck; Dump Trucks, side, end and bottom dumps, including Semi Trucks and Trains or combinations there of: up to and including 10 cu. yds.; Lift Jitneys, Fork Lifts (all sizes in loading, unloading and transporting material on job site); Loader and/or Leverman on Concrete Dry Batch Plant (manually operated); Pilot Car; Pickup Truck; Solo Flat Bed and misc. Body Trucks, 0-10 tons; Truck Tender; Truck Mechanic Tender; Water Wagons (rated capacity) up to 3,000 gallons; Transit Mix and Wet or Dry Mix - 5 cu. yds. and under; Lubrication Man, Fuel Truck Driver, Tireman, Wash Rack, Steam Cleaner or combinations; Team Driver; Slurry Truck Driver or Leverman; Tireman

GROUP 2: Boom Truck/Hydra-lift or Retracting Crane; Challenger; Dumpsters or similar equipment all sizes; Dump Trucks/Articulated Dumps 6 cu to 10 cu.; Flaherty Spreader Driver or Leverman; Lowbed Equipment, Flat Bed Semi-trailer or doubles transporting equipment or wet or dry materials; Lumber Carrier, Driver-Straddle Carrier (used in loading, unloading and transporting of materials on job site); Oil Distributor Driver or Leverman; Transit mix and wet or dry mix trcuks: over 5 cu. yds. and including 7 cu. yds.; Vacuum Trucks; Water truck/Wagons (rated capacity) over 3,000 to 5,000 gallons

GROUP 3: Ammonia Nitrate Distributor Driver; Dump trucks, side, end and bottom dumps, including Semi Trucks and Trains or combinations thereof: over 10 cu. yds. and including 30 cu. yds. includes Articulated Dump Trucks; Self-Propelled Street Sweeper; Transit mix and wet or dry mix truck: over 7 cu yds. and including 11 cu yds.; Truck Mechanic-Welder-Body Repairman; Utility and Clean-up Truck; Water Wagons (rated capacity) over 5,000 to 10,000 gallons

GROUP 4: Asphalt Burner; Dump Trucks, side, end and bottom cumps, including Semi-Trucks and Trains or combinations thereof: over 30 cu. yds. and including 50 cu. yds. includes Articulated Dump Trucks; Fire Guard; Transit Mix and Wet or Dry Mix Trucks, over 11 cu. yds. and including 15 cu. yds.; Water Wagon (rated capacity) over 10,000 gallons to 15,000 gallons

GROUP 5: Composite Crewman; Dump Trucks, side, end and bottom dumps, including Semi Trucks and Trains or combinations thereof: over 50 cu. yds. and including 60 cu. yds. includes Articulated Dump Trucks

GROUP 6: Bulk Cement Spreader w/o Auger; Dry Pre-Batch concrete Mix Trucks; Dump trucks, side, end and bottom dumps, including Semi Trucks and Trains of combinations thereof: over 60 cu. yds. and including 80 cu. yds., and includes Articulated Dump Trucks; Skid Truck

Provided to Builders Exchange of WA, Inc. For usage Conditions Agreement see www.bxwa.com - Always Verify Scale

GROUP 7: Dump Trucks, side, end and bottom dumps, including Semi Trucks and Trains or combinations thereof: over 80 cu. yds. and including 100 cu. yds., includes Articulated Dump Trucks; Industrial Lift Truck (mechanical tailgate)

---

* TEAM0174-001 06/01/2015

CLALLAM, GRAYS HARBOR, ISLAND, JEFFERSON, KING, KITSAP, LEWIS, MASON, PACIFIC (North of a straight line made by extending the north boundary line of Wahkiakum County west to the Pacific Ocean), PIERCE, SAN JUAN, SKAGIT, SNOHOMISH, THURSTON AND WHATCOM COUNTIES

	Rates	Fringes
Truck drivers:		
ZONE A:		
GROUP 1:	$ 32.18	17.27
GROUP 2:	$ 31.34	17.27
GROUP 3:	$ 28.53	17.27
GROUP 4:	$ 23.56	17.27
GROUP 5:	$ 31.73	17.27

ZONE B (25-45 miles from center of listed cities*): Add $.70 per hour to Zone A rates.
ZONE C (over 45 miles from centr of listed cities*): Add $1.00 per hour to Zone A rates.

*Zone pay will be calculated from the city center of the following listed cities:

BELLINGHAM	CENTRALIA	RAYMOND	OLYMPIA
EVERETT	SHELTON	ANACORTES	BELLEVUE
SEATTLE	PORT ANGELES	MT. VERNON	KENT
TACOMA	PORT TOWNSEND	ABERDEEN	BREMERTON

TRUCK DRIVERS CLASSIFICATIONS

GROUP 1 - "A-frame or Hydralift" trucks and Boom trucks or similar equipment when "A" frame or "Hydralift" and Boom truck or similar equipment is used; Buggymobile; Bulk Cement Tanker; Dumpsters and similar equipment, Tournorockers, Tournowagon, Tournotrailer, Cat DW series, Terra Cobra, Le Tourneau, Westinghouse, Athye Wagon, Euclid Two and Four-Wheeled power tractor with trailer and similar top-loaded equipment transporting material: Dump Trucks, side, end and bottom dump, including semi-trucks and trains or combinations thereof with 16 yards to 30 yards capacity: Over 30 yards $.15 per hour additional for each 10 yard increment; Explosive Truck (field mix) and similar equipment; Hyster Operators (handling bulk loose aggregates); Lowbed and Heavy Duty Trailer; Road Oil Distributor Driver; Spreader, Flaherty Transit mix used exclusively in heavy construction; Water Wagon and Tank

Provided to Builders Exchange of WA, Inc. For usage Conditions Agreement see www.bxwa.com - Always Verify Scale

Truck-3,000 gallons and over capacity

GROUP 2 - Bulllifts, or similar equipment used in loading or unloading trucks, transporting materials on job site; Dumpsters, and similar equipment, Tournorockers, Tournowagon, Turnotrailer, Cat. D.W. Series, Terra Cobra, Le Tourneau, Westinghouse, Athye wagon, Euclid two and four-wheeled power tractor with trailer and similar top-loaded equipment transporting material: Dump trucks, side, end and bottom dump, including semi-trucks and trains or combinations thereof with less than 16 yards capacity; Flatbed (Dual Rear Axle); Grease Truck, Fuel Truck, Greaser, Battery Service Man and/or Tire Service Man; Leverman and loader at bunkers and batch plants; Oil tank transport; Scissor truck; Slurry Truck; Sno-Go and similar equipment; Swampers; Straddler Carrier (Ross, Hyster) and similar equipment; Team Driver; Tractor (small, rubber-tired)(when used within Teamster jurisdiction); Vacuum truck; Water Wagon and Tank trucks-less than 3,000 gallons capacity; Winch Truck; Wrecker, Tow truck and similar equipment

GROUP 3 - Flatbed (single rear axle); Pickup Sweeper; Pickup Truck. (Adjust Group 3 upward by $2.00 per hour for onsite work only)

GROUP 4 - Escort or Pilot Car

GROUP 5 - Mechanic

HAZMAT PROJECTS

Anyone working on a HAZMAT job, where HAZMAT certification is required, shall be compensated as a premium, in addition to the classification working in as follows:
LEVEL C: +$.25 per hour - This level uses an air purifying respirator or additional protective clothing.
LEVEL B: +$.50 per hour - Uses same respirator protection as Level A. Supplied air line is provided in conjunction with a chemical "splash suit."
LEVEL A: +$.75 per hour - This level utilizes a fully-encapsulated suit with a self-contained breathing apparatus or a supplied air line.

Provided to Builders Exchange of WA, Inc. For usage Conditions Agreement see www.bxwa.com - Always Verify Scale

TEAM0690-004 01/01/2014

ADAMS, ASOTIN, BENTON, CHELAN, COLUMBIA, DOUGLAS, FERRY, FRANKLIN, GARFIELD, GRANT KITTITAS, LINCOLN, OKANOGAN, PEND OREILLE, SPOKANE, STEVENS, WALLA WALLA, WHITMAN AND YAKIMA COUNTIES

	Rates	Fringes
Truck drivers: (AREA 1: SPOKANE ZONE CENTER: Adams,Chelan, Douglas, Ferry, Grant, Kittitas, Lincoln, Okanogan, Pen Oreille,Spokane, Stevens, and Whitman Counties		
AREA 1: LEWISTON ZONE CENTER: Asotin, Columbia, and Garfield Counties		
AREA 2: PASCO ZONE CENTER: Benton, Franklin, Walla Walla and Yakima Counties		
AREA 1:		
GROUP 1	$ 20.17	15.19
GROUP 2	$ 22.44	15.19
GROUP 3	$ 22.94	15.19
GROUP 4	$ 23.27	15.19
GROUP 5	$ 23.38	15.19
GROUP 6	$ 23.55	15.19
GROUP 7	$ 24.08	15.19
GROUP 8	$ 24.44	15.19
AREA 2		
GROUP 1	$ 21.77	15.19
GROUP 2	$ 24.31	15.19
GROUP 3	$ 24.42	15.19
GROUP 4	$ 24.75	15.19
GROUP 5	$ 24.86	15.19
GROUP 6	$ 25.02	15.19
GROUP 7	$ 25.56	15.19
GROUP 8	$ 25.88	15.19

Zone Differential (Add to Zone 1 rate: Zone 1 + $2.00)

BASE POINTS: Spokane, Pasco, Lewiston
Zone 1: 0-45 radius miles from the main post office.
Zone 2: Outside 45 radius miles from the main post office

TRUCK DRIVERS CLASSIFICATIONS

GROUP 1: Escort Driver or Pilot Car; Employee Haul; Power Boat Hauling Employees or Material

GROUP 2: Fish Truck; Flat Bed Truck; Fork Lift (3000 lbs. and under); Leverperson (loading trucks at bunkers); Trailer Mounted Hydro Seeder and Mulcher; Seeder & Mulcher; Stationary Fuel Operator; Tractor (small, rubber-tired, pulling trailer or similar equipment)

Provided to Builders Exchange of WA, Inc. For usage Conditions Agreement see www.bxwa.com - Always Verify Scale

GROUP 3: Auto Crane (2000 lbs. capacity); Buggy Mobile & Similar; Bulk Cement Tanks & Spreader; Dumptor (6 yds. & under); Flat Bed Truck with Hydraullic System; Fork Lift (3001-16,000 lbs.); Fuel Truck Driver, Steamcleaner & Washer; Power Operated Sweeper; Rubber-tired Tunnel Jumbo; Scissors Truck; Slurry Truck Driver; Straddle Carrier (Ross, Hyster, & similar); Tireperson; Transit Mixers & Truck Hauling Concrete (3 yd. to & including 6 yds.); Trucks, side, end, bottom & articulated end dump (3 yards to and including 6 yds.); Warehouseperson (to include shipping & receiving); Wrecker & Tow Truck

GROUP 4: A-Frame; Burner, Cutter, & Welder; Service Greaser; Trucks, side, end, bottom & articulated end dump (over 6 yards to and including 12 yds.); Truck Mounted Hydro Seeder; Warehouseperson; Water Tank truck (0-8,000 gallons)

GROUP 5: Dumptor (over 6 yds.); Lowboy (50 tons & under); Self- loading Roll Off; Semi-Truck & Trailer; Tractor with Steer Trailer; Transit Mixers and Trucks Hauling Concrete (over 6 yds. to and including 10 yds.); Trucks, side, end, bottom and end dump (over 12 yds. to & including 20 yds.); Truck-Mounted Crane (with load bearing surface either mounted or pulled, up to 14 ton); Vacuum Truck (super sucker, guzzler, etc.)

GROUP 6: Flaherty Spreader Box Driver; Flowboys; Fork Lift (over 16,000 lbs.); Dumps (Semi-end); Mechanic (Field); Semi- end Dumps; Transfer Truck & Trailer; Transit Mixers & Trucks Hauling Concrete (over 10 yds. to & including 20 yds.); Trucks, side, end, bottom and articulated end dump (over 20 yds. to & including 40 yds.); Truck and Pup; Tournarocker, DWs & similar with 2 or more 4 wheel-power tractor with trailer, gallonage or yardage scale, whichever is greater Water Tank Truck (8,001- 14,000 gallons); Lowboy(over 50 tons)

GROUP 7: Oil Distributor Driver; Stringer Truck (cable oeprated trailer); Transit Mixers & Trucks Hauling Concrete (over 20 yds.); Truck, side, end, bottom end dump (over 40 yds. to & including 100 yds.); Truck Mounted Crane (with load bearing surface either mounted or pulled (16 through 25 tons);

GROUP 8: Prime Movers and Stinger Truck; Trucks, side, end, bottom and articulated end dump (over 100 yds.); Helicopter Pilot Hauling Employees or Materials

Footnote A - Anyone working on a HAZMAT job, where HAZMAT certification is required, shall be compensated as a premium, in additon to the classification working in as follows:

LEVEL C-D: - $.50 PER HOUR (This is the lowest level of protection. This level may use an air purifying respirator or additional protective clothing.

Provided to Builders Exchange of WA, Inc. For usage Conditions Agreement see www.bxwa.com - Always Verify Scale

LEVEL A-B: - $1.00 PER HOUR (Uses supplied air is conjunction with a chemical spash suit or fully encapsulated suit with a self-contained breathing apparatus.

Employees shall be paid Hazmat pay in increments of four(4) and eight(8) hours.

NOTE:
Trucks Pulling Equipment Trailers: shall receive $.15/hour over applicable truck rate

---

WELDERS - Receive rate prescribed for craft performing operation to which welding is incidental.

==========

Unlisted classifications needed for work not included within the scope of the classifications listed may be added after award only as provided in the labor standards contract clauses (29CFR 5.5 (a) (1) (ii)).

The body of each wage determination lists the classification and wage rates that have been found to be prevailing for the cited type(s) of construction in the area covered by the wage determination. The classifications are listed in alphabetical order of "identifiers" that indicate whether the particular rate is a union rate (current union negotiated rate for local), a survey rate (weighted average rate) or a union average rate (weighted union average rate).

Union Rate Identifiers

A four letter classification abbreviation identifier enclosed in dotted lines beginning with characters other than "SU" or "UAVG" denotes that the union classification and rate were prevailing for that classification in the survey. Example: PLUM0198-005 07/01/2014. PLUM is an abbreviation identifier of the union which prevailed in the survey for this classification, which in this example would be Plumbers. 0198 indicates the local union number or district council number where applicable, i.e., Plumbers Local 0198. The next number, 005 in the example, is an internal number used in processing the wage determination. 07/01/2014 is the effective date of the most current negotiated rate, which in this example is July 1, 2014.

Union prevailing wage rates are updated to reflect all rate changes in the collective bargaining agreement (CBA) governing this classification and rate.

Provided to Builders Exchange of WA, Inc. For usage Conditions Agreement see www.bxwa.com - Always Verify Scale

Survey Rate Identifiers

Classifications listed under the "SU" identifier indicate that no one rate prevailed for this classification in the survey and the published rate is derived by computing a weighted average rate based on all the rates reported in the survey for that classification. As this weighted average rate includes all rates reported in the survey, it may include both union and non-union rates. Example: SULA2012-007 5/13/2014. SU indicates the rates are survey rates based on a weighted average calculation of rates and are not majority rates. LA indicates the State of Louisiana. 2012 is the year of survey on which these classifications and rates are based. The next number, 007 in the example, is an internal number used in producing the wage determination. 5/13/2014 indicates the survey completion date for the classifications and rates under that identifier.

Survey wage rates are not updated and remain in effect until a new survey is conducted.

Union Average Rate Identifiers

Classification(s) listed under the UAVG identifier indicate that no single majority rate prevailed for those classifications; however, 100% of the data reported for the classifications was union data. EXAMPLE: UAVG-OH-0010 08/29/2014. UAVG indicates that the rate is a weighted union average rate. OH indicates the state. The next number, 0010 in the example, is an internal number used in producing the wage determination. 08/29/2014 indicates the survey completion date for the classifications and rates under that identifier.

A UAVG rate will be updated once a year, usually in January of each year, to reflect a weighted average of the current negotiated/CBA rate of the union locals from which the rate is based.

Provided to Builders Exchange of WA, Inc. For usage Conditions Agreement see www.bxwa.com - Always Verify Scale

WAGE DETERMINATION APPEALS PROCESS

1.) Has there been an initial decision in the matter? This can be:

* an existing published wage determination
* a survey underlying a wage determination
* a Wage and Hour Division letter setting forth a position on a wage determination matter
* a conformance (additional classification and rate) ruling

On survey related matters, initial contact, including requests for summaries of surveys, should be with the Wage and Hour Regional Office for the area in which the survey was conducted because those Regional Offices have responsibility for the Davis-Bacon survey program. If the response from this initial contact is not satisfactory, then the process described in 2.) and 3.) should be followed.

With regard to any other matter not yet ripe for the formal process described here, initial contact should be with the Branch of Construction Wage Determinations. Write to:

Branch of Construction Wage Determinations
Wage and Hour Division
U.S. Department of Labor
200 Constitution Avenue, N.W.
Washington, DC 20210

2.) If the answer to the question in 1.) is yes, then an interested party (those affected by the action) can request review and reconsideration from the Wage and Hour Administrator (See 29 CFR Part 1.8 and 29 CFR Part 7). Write to:

Wage and Hour Administrator
U.S. Department of Labor
200 Constitution Avenue, N.W.
Washington, DC 20210

Provided to Builders Exchange of WA, Inc. For usage Conditions Agreement see www.bxwa.com - Always Verify Scale

The request should be accompanied by a full statement of the interested party's position and by any information (wage payment data, project description, area practice material, etc.) that the requestor considers relevant to the issue.

3.) If the decision of the Administrator is not favorable, an interested party may appeal directly to the Administrative Review Board (formerly the Wage Appeals Board). Write to:

Administrative Review Board
U.S. Department of Labor
200 Constitution Avenue, N.W.
Washington, DC 20210

4.) All decisions by the Administrative Review Board are final.

==========

END OF GENERAL DECISION

Provided to Builders Exchange of WA, Inc. For usage Conditions Agreement see www.bxwa.com - Always Verify Scale

Washington State Department of Labor and Industries
Policy Statement
(Regarding the Production of "Standard" or "Non-standard" Items)

Below is the department's (State L&I's) list of criteria to be used in determining whether a prefabricated item is "standard" or "non-standard". For items not appearing on WSDOT's predetermined list, these criteria shall be used by the Contractor (and the Contractor's subcontractors, agents to subcontractors, suppliers, manufacturers, and fabricators) to determine coverage under RCW 39.12. The production, in the State of Washington, of non-standard items is covered by RCW 39.12, and the production of standard items is not. The production of any item outside the State of Washington is not covered by RCW 39.12.

1. Is the item fabricated for a public works project? If not, it is not subject to RCW 39.12. If it is, go to question 2.

2. Is the item fabricated on the public works jobsite? If it is, the work is covered under RCW 39.12. If not, go to question 3.

3. Is the item fabricated in an assembly/fabrication plant set up for, and dedicated primarily to, the public works project? If it is, the work is covered by RCW 39.12. If not, go to question 4.

4. Does the item require any assembly, cutting, modification or other fabrication by the supplier? If not, the work is not covered by RCW 39.12. If yes, go to question 5.

5. Is the prefabricated item intended for the public works project typically an inventory item which could reasonably be sold on the general market? If not, the work is covered by RCW 39.12. If yes, go to question 6.

6. Does the specific prefabricated item, generally defined as standard, have any unusual characteristics such as shape, type of material, strength requirements, finish, etc? If yes, the work is covered under RCW 39.12.

Any firm with questions regarding the policy, WSDOT's Predetermined List, or for determinations of covered and non-covered workers shall be directed to State L&I at (360) 902-5330.

Provided to Builders Exchange of WA, Inc. For usage Conditions Agreement see www.bxwa.com - Always Verify Scale

WSDOT's
Predetermined List for
Suppliers - Manufactures - Fabricator

Below is a list of potentially prefabricated items, originally furnished by WSDOT to Washington State Department of Labor and Industries, that may be considered non-standard and therefore covered by the prevailing wage law, RCW 39.12. Items marked with an X in the "YES" column should be considered to be non-standard and therefore covered by RCW 39.12. Items marked with an X in the "NO" column should be considered to be standard and therefore not covered. Of course, exceptions to this general list may occur, and in that case shall be evaluated according to the criteria described in State and L&I's policy statement.

	ITEM DESCRIPTION	YES	NO
1.	Metal rectangular frames, solid metal covers, herringbone grates, and bi-directional vaned grates for Catch Basin Types 1, 1L, 1P, and 2 and Concrete Inlets. See Std. Plans		X
2.	Metal circular frames (rings) and covers, circular grates, and prefabricated ladders for Manhole Types 1, 2, and 3, Drywell Types 1, 2, and 3 and Catch Basin Type 2. See Std. Plans		X
3.	Prefabricated steel grate supports and welded grates, metal frames and dual vaned grates, and Type 1, 2, and 3 structural tubing grates for Drop Inlets. See Std. Plans.		X
4.	Concrete Pipe - Plain Concrete pipe and reinforced concrete pipe Class 2 to 5 sizes smaller than 60 inch diameter.		X
5.	Concrete Pipe - Plain Concrete pipe and reinforced concrete pipe Class 2 to 5 sizes larger than 60 inch diameter.		X
6.	Corrugated Steel Pipe - Steel lock seam corrugated pipe for culverts and storm sewers, sizes 30 inch to 120 inches in diameter. May also be treated, 1 thru 5.		X
7.	Corrugated Aluminum Pipe - Aluminum lock seam corrugated pipe for culverts and storm sewers, sizes 30 inch to 120 inches in diameter. May also be treated, #5.		X

Provided to Builders Exchange of WA, Inc. For usage Conditions Agreement see www.bxwa.com - Always Verify Scale

	ITEM DESCRIPTION	YES	NO
8.	Anchor Bolts & Nuts - Anchor Bolts and Nuts, for mounting sign structures, luminaries and other items, shall be made from commercial bolt stock. See Contract Plans and Std. Plans for size and material type.		X
9.	Aluminum Pedestrian Handrail - Pedestrian handrail conforming to the type and material specifications set forth in the contract plans. Welding of aluminum shall be in accordance with Section 9-28.14(3).	X	
10.	Major Structural Steel Fabrication - Fabrication of major steel items such as trusses, beams, girders, etc., for bridges.	X	
11.	Minor Structural Steel Fabrication - Fabrication of minor steel Items such as special hangers, brackets, access doors for structures, access ladders for irrigation boxes, bridge expansion joint systems, etc., involving welding, cutting, punching and/or boring of holes. See Contact Plans for item description and shop drawings.	X	
12.	Aluminum Bridge Railing Type BP - Metal bridge railing conforming to the type and material specifications set forth in the Contract Plans. Welding of aluminum shall be in accordance with Section 9-28.14(3).		X
13.	Concrete Piling--Precast-Prestressed concrete piling for use as 55 and 70 ton concrete piling. Concrete to conform to Section 9-19.1 of Std. Spec..	X	
14.	Precast Manhole Types 1, 2, and 3 with cones, adjustment sections and flat top slabs. See Std. Plans.		X
15.	Precast Drywell Types 1, 2, and with cones and adjustment Sections. See Std. Plans.		X
16.	Precast Catch Basin - Catch Basin type 1, 1L, 1P, and 2 With adjustment sections. See Std. Plans.		X

Provided to Builders Exchange of WA, Inc. For usage Conditions Agreement see www.bxwa.com - Always Verify Scale

	ITEM DESCRIPTION	YES	NO
17.	Precast Concrete Inlet - with adjustment sections, See Std. Plans		X
18.	Precast Drop Inlet Type 1 and 2 with metal grate supports. See Std. Plans.		X
19.	Precast Grate Inlet Type 2 with extension and top units. See Std. Plans		X
20.	Metal frames, vaned grates, and hoods for Combination Inlets. See Std. Plans		X
21.	Precast Concrete Utility Vaults - Precast Concrete utility vaults of various sizes. Used for in ground storage of utility facilities and controls. See Contract Plans for size and construction requirements. Shop drawings are to be provided for approval prior to casting		X
22.	Vault Risers - For use with Valve Vaults and Utilities Vaults.		X
23.	Valve Vault - For use with underground utilities. See Contract Plans for details.		X
24.	Precast Concrete Barrier - Precast Concrete Barrier for use as new barrier or may also be used as Temporary Concrete Barrier. Only new state approved barrier may be used as permanent barrier.		X
25.	Reinforced Earth Wall Panels – Reinforced Earth Wall Panels in size and shape as shown in the Plans. Fabrication plant has annual approval for methods and materials to be used. See Shop Drawing. Fabrication at other locations may be approved, after facilities inspection, contact HQ. Lab.	X	
26.	Precast Concrete Walls - Precast Concrete Walls - tilt-up wall panel in size and shape as shown in Plans. Fabrication plant has annual approval for methods and materials to be used	X	

Provided to Builders Exchange of WA, Inc. For usage Conditions Agreement see www.bxwa.com - Always Verify Scale

	ITEM DESCRIPTION	YES	NO
27.	Precast Railroad Crossings - Concrete Crossing Structure Slabs.	X	
28.	12, 18 and 26 inch Standard Precast Prestressed Girder – Standard Precast Prestressed Girder for use in structures. Fabricator plant has annual approval of methods and materials to be used. Shop Drawing to be provided for approval prior to casting girders. See Std. Spec. Section 6-02.3(25)A	X	
29.	Prestressed Concrete Girder Series 4-14 - Prestressed Concrete Girders for use in structures. Fabricator plant has annual approval of methods and materials to be used. Shop Drawing to be provided for approval prior to casting girders. See Std. Spec. Section 6-02.3(25)A .	X	
30.	Prestressed Tri-Beam Girder - Prestressed Tri-Beam Girders for use in structures. Fabricator plant has annual approval of methods and materials to be used. Shop Drawing to be provided for approval prior to casting girders. See Std. Spec. Section 6-02.3(25)A	X	
31.	Prestressed Precast Hollow-Core Slab – Precast Prestressed Hollow-core slab for use in structures. Fabricator plant has annual approval of methods and materials to be used. Shop Drawing to be provided for approval prior to casting girders. See Std. Spec. Section 6-02.3(25)A.	X	
32.	Prestressed-Bulb Tee Girder - Bulb Tee Prestressed Girder for use in structures. Fabricator plant has annual approval of methods and materials to be used. Shop Drawing to be provided for approval prior to casting girders. See Std. Spec. Section 6-02.3(25)A	X	
33.	Monument Case and Cover See Std. Plan.		X

Provided to Builders Exchange of WA, Inc. For usage Conditions Agreement see www.bxwa.com - Always Verify Scale

	ITEM DESCRIPTION	YES	NO
34.	Cantilever Sign Structure - Cantilever Sign Structure fabricated from steel tubing meeting AASHTO-M-183. See Std. Plans, and Contract Plans for details. The steel structure shall be galvanized after fabrication in accordance with AASHTO-M-111.	X	
35.	Mono-tube Sign Structures - Mono-tube Sign Bridge fabricated to details shown in the Plans. Shop drawings for approval are required prior to fabrication.	X	
36.	Steel Sign Bridges - Steel Sign Bridges fabricated from steel tubing meeting AASHTO-M-138 for Aluminum Alloys. See Std. Plans, and Contract Plans for details. The steel structure shall be galvanized after fabrication in accordance with AASHTO-M-111.	X	
37.	Steel Sign Post - Fabricated Steel Sign Posts as detailed in Std Plans. Shop drawings for approval are to be provided prior to fabrication		X
38.	Light Standard-Prestressed - Spun, prestressed, hollow concrete poles.	X	
39.	Light Standards - Lighting Standards for use on highway illumination systems, poles to be fabricated to conform with methods and materials as specified on Std. Plans. See Specia Provisions for pre-approved drawings.	X	
40.	Traffic Signal Standards - Traffic Signal Standards for use on highway and/or street signal systems. Standards to be fabricated to conform with methods and material as specified on Std. Plans. See Special Provisions for pre-approved drawings	X	
41.	Precast Concrete Sloped Mountable Curb (Single and DualFaced) See Std. Plans.		X

Provided to Builders Exchange of WA, Inc. For usage Conditions Agreement see www.bxwa.com - Always Verify Scale

	ITEM DESCRIPTION	YES	NO
42.	Traffic Signs - Prior to approval of a Fabricator of Traffic Signs, the sources of the following materials must be submitted and approved for reflective sheeting, legend material, and aluminum sheeting. **NOTE:** *** Fabrication inspection required. Only signs tagged "Fabrication Approved" by WSDOT Sign Fabrication Inspector to be installed	X	X
		Custom Message	Std Signing Message
43.	Cutting & bending reinforcing steel		X
44.	Guardrail components	X	X
		Custom End Sec	Standard Sec
45.	Aggregates/Concrete mixes	Covered by WAC 296-127-018	
46.	Asphalt	Covered by WAC 296-127-018	
47.	Fiber fabrics		X
48.	Electrical wiring/components		X
49.	treated or untreated timber pile		X
50.	Girder pads (elastomeric bearing)	X	
51.	Standard Dimension lumber		X
52.	Irrigation components		X

Provided to Builders Exchange of WA, Inc. For usage Conditions Agreement see www.bxwa.com - Always Verify Scale

ITEM DESCRIPTION	YES	NO
53. Fencing materials		X
54. Guide Posts		X
55. Traffic Buttons		X
56. Epoxy		X
57. Cribbing		X
58. Water distribution materials		X
59. Steel "H" piles		X
60. Steel pipe for concrete pile casings		X
61. Steel pile tips, standard		X
62. Steel pile tips, custom	X	

Prefabricated items specifically produced for public works projects that are prefabricated in a county other than the county wherein the public works project is to be completed, the wage for the offsite prefabrication shall be the applicable prevailing wage for the county in which the actual prefabrication takes place.

It is the manufacturer of the prefabricated product to verify that the correct county wage rates are applied to work they perform.

See RCW 39.12.010
(The definition of "locality" in RCW 39.12.010(2) contains the phrase "wherein the physical work is being performed." The department interprets this phrase to mean the actual work site.

Provided to Builders Exchange of WA, Inc. For usage Conditions Agreement see www.bxwa.com - Always Verify Scale

WSDOT's List of State Occupations not applicable to Heavy and Highway Construction Projects

This project is subject to the state hourly minimum rates for wages and fringe benefits in the contract provisions, as provided by the state Department of Labor and Industries.
The following list of occupations, is comprised of those occupations that are not normally used in the construction of heavy and highway projects.
When considering job classifications for use and / or payment when bidding on, or building heavy and highway construction projects for, or administered by WSDOT, these Occupations will be excepted from the included "Washington State Prevailing Wage Rates For Public Work Contracts" documents.

- Building Service Employees
- Electrical Fixture Maintenance Workers
- Electricians - Motor Shop
- Heating Equipment Mechanics
- Industrial Engine and Machine Mechanics
- Industrial Power Vacuum Cleaners
- Inspection, Cleaning, Sealing of Water Systems by Remote Control
- Laborers - Underground Sewer & Water
- Machinists (Hydroelectric Site Work)
- Modular Buildings
- Playground & Park Equipment Installers
- Power Equipment Operators - Underground Sewer & Water
- Residential *** ALL ASSOCIATED RATES ***
- Sign Makers and Installers (Non-Electrical)
- Sign Makers and Installers (Electrical)
- Stage Rigging Mechanics (Non Structural)

The following occupations may be used only as outlined in the preceding text concerning "WSDOT's list for Suppliers - Manufacturers - Fabricators"

- Fabricated Precast Concrete Products
- Metal Fabrication (In Shop)

Definitions for the Scope of Work for prevailing wages may be found at the Washington State Department of Labor and Industries web site and in WAC Chapter 296-127.

Provided to Builders Exchange of WA, Inc. For usage Conditions Agreement see www.bxwa.com - Always Verify Scale

WAC 296-127-018 Agency filings affecting this section

Coverage and exemptions of workers involved in the production and delivery of gravel, concrete, asphalt, or similar materials.

(1) The materials covered under this section include but are not limited to: Sand, gravel, crushed rock, concrete, asphalt, or other similar materials.

(2) All workers, regardless of by whom employed, are subject to the provisions of chapter 39.12 RCW when they perform any or all of the following functions:

(a) They deliver or discharge any of the above-listed materials to a public works project site:

(i) At one or more point(s) directly upon the location where the material will be incorporated into the project; or

(ii) At multiple points at the project; or

(iii) Adjacent to the location and coordinated with the incorporation of those materials.

(b) They wait at or near a public works project site to perform any tasks subject to this section of the rule.

(c) They remove any materials from a public works construction site pursuant to contract requirements or specifications (e.g., excavated materials, materials from demolished structures, clean-up materials, etc.).

(d) They work in a materials production facility (e.g., batch plant, borrow pit, rock quarry, etc.,) which is established for a public works project for the specific, but not necessarily exclusive, purpose of supplying materials for the project.

(e) They deliver concrete to a public works site regardless of the method of incorporation.

(f) They assist or participate in the incorporation of any materials into the public works project.

Provided to Builders Exchange of WA, Inc. For usage Conditions Agreement see www.bxwa.com - Always Verify Scale

(3) All travel time that relates to the work covered under subsection (2) of this section requires the payment of prevailing wages. Travel time includes time spent waiting to load, loading, transporting, waiting to unload, and delivering materials. Travel time would include all time spent in travel in support of a public works project whether the vehicle is empty or full. For example, travel time spent returning to a supply source to obtain another load of material for use on a public works site or returning to the public works site to obtain another load of excavated material is time spent in travel that is subject to prevailing wage. Travel to a supply source, including travel from a public works site, to obtain materials for use on a private project would not be travel subject to the prevailing wage.

(4) Workers are not subject to the provisions of chapter 39.12 RCW when they deliver materials to a stockpile.

(a) A "stockpile" is defined as materials delivered to a pile located away from the site of incorporation such that the stockpiled materials must be physically moved from the stockpile and transported to another location on the project site in order to be incorporated into the project.

(b) A stockpile does not include any of the functions described in subsection (2)(a) through (f) of this section; nor does a stockpile include materials delivered or distributed to multiple locations upon the project site; nor does a stockpile include materials dumped at the place of incorporation, or adjacent to the location and coordinated with the incorporation.

(5) The applicable prevailing wage rate shall be determined by the locality in which the work is performed. Workers subject to subsection (2)(d) of this section, who produce such materials at an off-site facility shall be paid the applicable prevailing wage rates for the county in which the off-site facility is located. Workers subject to subsection (2) of this section, who deliver such materials to a public works project site shall be paid the applicable prevailing wage rates for the county in which the public works project is located.

[Statutory Authority: Chapter 39.12 RCW, RCW 43.22.051 and 43.22.270. 08-24-101, § 296-127-018, filed 12/2/08, effective 1/2/09. Statutory Authority: Chapters 39.04 and 39.12 RCW and RCW 43.22.270. 92-01-104 and 92-08-101, § 296-127-018, filed 12/18/91 and 4/1/92, effective 8/31/92.]

Provided to Builders Exchange of WA, Inc. For usage Conditions Agreement see www.bxwa.com - Always Verify Scale

****

Overtime Codes

Overtime calculations are based on the hourly rate actually paid to the worker. On public works projects, the hourly rate must be not less than the prevailing rate of wage minus the hourly rate of the cost of fringe benefits actually provided for the worker.

1. ALL HOURS WORKED IN EXCESS OF EIGHT (8) HOURS PER DAY OR FORTY (40) HOURS PER WEEK SHALL BE PAID AT ONE AND ONE-HALF TIMES THE HOURLY RATE OF WAGE.

B. All hours worked on Saturdays shall be paid at one and one-half times the hourly rate of wage. All hours worked on Sundays and holidays shall be paid at double the hourly rate of wage.

C. The first two (2) hours after eight (8) regular hours Monday through Friday and the first ten (10) hours on Saturday shall be paid at one and one-half times the hourly rate of wage. All other overtime hours and all hours worked on Sundays and holidays shall be paid at double the hourly rate of wage.

D. The first two (2) hours before or after a five-eight (8) hour workweek day or a four-ten (10) hour workweek day and the first eight (8) hours worked the next day after either workweek shall be paid at one and one-half times the hourly rate of wage. All additional hours worked and all worked on Sundays and holidays shall be paid at double the hourly rate of wage.

E. The first two (2) hours after eight (8) regular hours Monday through Friday and the first eight (8) hours on Saturday shall be paid at one and one-half times the hourly rate of wage. All other hours worked Monday through Saturday, and all hours worked on Sundays and holidays shall be paid at double the hourly rate of wage.

F. The first two (2) hours after eight (8) regular hours Monday through Friday and the first ten (10) hours on Saturday shall be paid at one and one-half times the hourly rate of wage. All other overtime hours worked, except Labor Day, shall be paid at double the hourly rate of wage. All hours worked on Labor Day shall be paid at three times the hourly rate of wage.

G. The first ten (10) hours worked on Saturdays and the first ten (10) hours worked on a fifth calendar weekday in a four-ten hour schedule, shall be paid at one and one-half times the hourly rate of wage. All hours worked in excess of ten (10) hours per day Monday through Saturday and all hours worked on Sundays and holidays shall be paid at double the hourly rate of wage.

H. All hours worked on Saturdays (except makeup days if work is lost due to inclement weather conditions or equipment breakdown) shall be paid at one and one-half times the hourly rate of wage. All hours worked Monday through Saturday over twelve (12) hours and all hours worked on Sundays and holidays shall be paid at double the hourly rate of wage.

I. All hours worked on Sundays and holidays shall also be paid at double the hourly rate of wage.

J. The first two (2) hours after eight (8) regular hours Monday through Friday and the first ten (10) hours on Saturday shall be paid at one and one-half times the hourly rate of wage. All hours worked over ten (10) hours Monday through Saturday, Sundays and holidays shall be paid at double the hourly rate of wage.

K. All hours worked on Saturdays and Sundays shall be paid at one and one-half times the hourly rate of wage. All hours worked on holidays shall be paid at double the hourly rate of wage.

M. All hours worked on Saturdays (except makeup days if work is lost due to inclement weather conditions) shall be paid at one and one-half times the hourly rate of wage. All hours worked on Sundays and holidays shall be paid at double the hourly rate of wage.

N. All hours worked on Saturdays (except makeup days) shall be paid at one and one-half times the hourly rate of wage. All hours worked on Sundays and holidays shall be paid at double the hourly rate of wage.

Provided to Builders Exchange of WA, Inc. For usage Conditions Agreement see www.bxwa.com - Always Verify Scale

Overtime Codes Continued

1. O. The first ten (10) hours worked on Saturday shall be paid at one and one-half times the hourly rate of wage. All hours worked on Sundays, holidays and after twelve (12) hours, Monday through Friday and after ten (10) hours on Saturday shall be paid at double the hourly rate of wage.

P. All hours worked on Saturdays (except makeup days if circumstances warrant) and Sundays shall be paid at one and one-half times the hourly rate of wage. All hours worked on holidays shall be paid at double the hourly rate of wage.

Q. The first two (2) hours after eight (8) regular hours Monday through Friday and up to ten (10) hours worked on Saturdays shall be paid at one and one-half times the hourly rate of wage. All hours worked in excess of ten (10) hours per day Monday through Saturday and all hours worked on Sundays and holidays (except Christmas day) shall be paid at double the hourly rate of wage. All hours worked on Christmas day shall be paid at two and one-half times the hourly rate of wage.

R. All hours worked on Sundays and holidays shall be paid at two times the hourly rate of wage.

S. The first two (2) hours after eight (8) regular hours Monday through Friday and the first eight (8) hours on Saturday shall be paid at one and one-half times the hourly rate of wage. All hours worked on holidays and all other overtime hours worked, except Labor Day, shall be paid at double the hourly rate of wage. All hours worked on Labor Day shall be paid at three times the hourly rate of wage.

U. All hours worked on Saturdays shall be paid at one and one-half times the hourly rate of wage. All hours worked on Sundays and holidays (except Labor Day) shall be paid at two times the hourly rate of wage. All hours worked on Labor Day shall be paid at three times the hourly rate of wage.

V. All hours worked on Sundays and holidays (except Thanksgiving Day and Christmas day) shall be paid at one and one-half times the hourly rate of wage. All hours worked on Thanksgiving Day and Christmas day shall be paid at double the hourly rate of wage.

W. All hours worked on Saturdays and Sundays (except make-up days due to conditions beyond the control of the employer)) shall be paid at one and one-half times the hourly rate of wage. All hours worked on holidays shall be paid at double the hourly rate of wage.

X. The first four (4) hours after eight (8) regular hours Monday through Friday and the first twelve (12) hours on Saturday shall be paid at one and one-half times the hourly rate of wage. All hours worked over twelve (12) hours Monday through Saturday, Sundays and holidays shall be paid at double the hourly rate of wage. When holiday falls on Saturday or Sunday, the day before Saturday, Friday, and the day after Sunday, Monday, shall be considered the holiday and all work performed shall be paid at double the hourly rate of wage.

Y. All hours worked outside the hours of 5:00 am and 5:00 pm (or such other hours as may be agreed upon by any employer and the employee) and all hours worked in excess of eight (8) hours per day (10 hours per day for a 4 x 10 workweek) and on Saturdays and holidays (except labor day) shall be paid at one and one-half times the hourly rate of wage. (except for employees who are absent from work without prior approval on a scheduled workday during the workweek shall be paid at the straight-time rate until they have worked 8 hours in a day (10 in a 4 x 10 workweek) or 40 hours during that workweek.) All hours worked Monday through Saturday over twelve (12) hours and all hours worked on Sundays and Labor Day shall be paid at double the hourly rate of wage.

Z. All hours worked on Saturdays and Sundays shall be paid at one and one-half times the hourly rate of wage. All hours worked on holidays shall be paid the straight time rate of pay in addition to holiday pay.

Provided to Builders Exchange of WA, Inc. For usage Conditions Agreement see www.bxwa.com - Always Verify Scale

Overtime Codes Continued

2. ALL HOURS WORKED IN EXCESS OF EIGHT (8) HOURS PER DAY OR FORTY (40) HOURS PER WEEK SHALL BE PAID AT ONE AND ONE-HALF TIMES THE HOURLY RATE OF WAGE.

B. All hours worked on holidays shall be paid at one and one-half times the hourly rate of wage.

C. All hours worked on Sundays shall be paid at one and one-half times the hourly rate of wage. All hours worked on holidays shall be paid at two times the hourly rate of wage.

F. The first eight (8) hours worked on holidays shall be paid at the straight hourly rate of wage in addition to the holiday pay. All hours worked in excess of eight (8) hours on holidays shall be paid at double the hourly rate of wage.

G. All hours worked on Sunday shall be paid at two times the hourly rate of wage. All hours worked on paid holidays shall be paid at two and one-half times the hourly rate of wage including holiday pay.

H. All hours worked on Sunday shall be paid at two times the hourly rate of wage. All hours worked on holidays shall be paid at one and one-half times the hourly rate of wage.

O. All hours worked on Sundays and holidays shall be paid at one and one-half times the hourly rate of wage.

R. All hours worked on Sundays and holidays and all hours worked over sixty (60) in one week shall be paid at double the hourly rate of wage.

U. All hours worked on Saturdays shall be paid at one and one-half times the hourly rate of wage. All hours worked over 12 hours in a day or on Sundays and holidays shall be paid at double the hourly rate of wage.

W. The first two (2) hours after eight (8) regular hours Monday through Friday and the first eight (8) hours on Saturday shall be paid at one and one-half times the hourly rate of wage. All other hours worked Monday through Saturday, and all hours worked on Sundays and holidays shall be paid at double the hourly rate of wage. On a four-day, ten-hour weekly schedule, either Monday thru Thursday or Tuesday thru Friday schedule, all hours worked after ten shall be paid at double the hourly rate of wage. The first eight (8) hours worked on the fifth day shall be paid at one and one-half times the hourly rate of wage. All other hours worked on the fifth, sixth, and seventh days and on holidays shall be paid at double the hourly rate of wage.

3. ALL HOURS WORKED IN EXCESS OF EIGHT (8) HOURS PER DAY OR FORTY (40) HOURS PER WEEK SHALL BE PAID AT ONE AND ONE-HALF TIMES THE HOURLY RATE OF WAGE.

A. Work performed in excess of eight (8) hours of straight time per day, or ten (10) hours of straight time per day when four ten (10) hour shifts are established, or forty (40) hours of straight time per week, Monday through Friday, or outside the normal shift, and all work on Saturdays shall be paid at time and one-half the straight time rate. Hours worked over twelve hours (12) in a single shift and all work performed after 6:00 pm Saturday to 6:00 am Monday and holidays shall be paid at double the straight time rate of pay. Any shift starting between the hours of 6:00 pm and midnight shall receive an additional one dollar ($1.00) per hour for all hours worked that shift. The employer shall have the sole discretion to assign overtime work to employees. Primary consideration for overtime work shall be given to employees regularly assigned to the work to be performed on overtime situations. After an employee has worked eight (8) hours at an applicable overtime rate, all additional hours shall be at the applicable overtime rate until such time as the employee has had a break of eight (8) hours or more.

C. Work performed in excess of eight (8) hours of straight time per day, or ten (10) hours of straight time per day when four ten (10) hour shifts are established, or forty (40) hours of straight time per week, Monday through Friday, or outside the normal shift, and all work on Saturdays shall be paid at one and one-half times the hourly rate of wage. All work performed after 6:00 pm Saturday to 5:00 am Monday and Holidays shall be paid at double the hourly rate of wage. After an employee has worked eight (8) hours at an applicable overtime rate, all additional hours shall be at the applicable overtime rate until such time as the employee has had a break of eight (8) hours or more.

Provided to Builders Exchange of WA, Inc. For usage Conditions Agreement see www.bxwa.com - Always Verify Scale

Overtime Codes Continued

3. D. All hours worked between the hours of 6:00 pm and 6:00 am, Monday through Saturday, shall be paid at a premium rate of 15% over the hourly rate of wage. All other hours worked after 6:00 am on Saturdays, shall be paid at one and one-half times the hourly rate of wage. All hours worked on Sundays and holidays shall be paid at double the hourly rate of wage.

E. All hours worked Sundays and holidays shall be paid at double the hourly rate of wage. Each week, once 40 hours of straight time work is achieved, then any hours worked over 10 hours per day Monday through Saturday shall be paid at double the hourly wage rate.

F. All hours worked on Saturday shall be paid at one and one-half times the hourly rate of wage. All hours worked on Sunday shall be paid at two times the hourly rate of wage. All hours worked on paid holidays shall be paid at two and one-half times the hourly rate of wage including holiday pay.

H. All work performed on Sundays between March 16th and October 14th and all Holidays shall be compensated for at two (2) times the regular rate of pay. Work performed on Sundays between October 15th and March 15th shall be compensated at one and one half (1-1/2) times the regular rate of pay.

I. All hours worked on Saturdays shall be paid at one and one-half times the hourly rate of wage. In the event the job is down due to weather conditions during a five day work week (Monday through Friday,) or a four day-ten hour work week (Tuesday through Friday,) then Saturday may be worked as a voluntary make-up day at the straight time rate. However, Saturday shall not be utilized as a make-up day when a holiday falls on Friday. All hours worked Monday through Saturday over twelve (12) hours and all hours worked on Sundays and holidays shall be paid at double the hourly rate of wage.

4. ALL HOURS WORKED IN EXCESS OF EIGHT (8) HOURS PER DAY OR FORTY (40) HOURS PER WEEK SHALL BE PAID AT ONE AND ONE-HALF TIMES THE HOURLY RATE OF WAGE.

A. All hours worked in excess of eight (8) hours per day or forty (40) hours per week shall be paid at double the hourly rate of wage. All hours worked on Saturdays, Sundays and holidays shall be paid at double the hourly rate of wage.

B. All hours worked over twelve (12) hours per day and all hours worked on holidays shall be paid at double the hourly rate of wage.

C. On Monday through Friday, the first four (4) hours of overtime after eight (8) hours of straight time work shall be paid at one and one half (1-1/2) times the straight time rate of pay, unless a four (4) day ten (10) hour workweek has been established. On a four (4) day ten (10) hour workweek scheduled Monday through Thursday, or Tuesday through Friday, the first two (2) hours of overtime after ten (10) hours of straight time work shall be paid at one and one half (1-1/2) times the straight time rate of pay. On Saturday, the first twelve (12) hours of work shall be paid at one and one half (1-1/2) times the straight time rate of pay, except that if the job is down on Monday through Friday due to weather conditions or other conditions outside the control of the employer, the first ten (10) hours on Saturday may be worked at the straight time rate of pay. All hours worked over twelve (12) hours in a day and all hours worked on Sunday and Holidays shall be paid at two (2) times the straight time rate of pay.

Provided to Builders Exchange of WA, Inc. For usage Conditions Agreement see www.bxwa.com - Always Verify Scale

Overtime Codes Continued

4. D. All hours worked in excess of eight (8) hours per day or forty (40) hours per week shall be paid at double the hourly rate of wage. All hours worked on Saturday, Sundays and holidays shall be paid at double the hourly rate of pay. Rates include all members of the assigned crew.

EXCEPTION:
On all multipole structures and steel transmission lines, switching stations, regulating, capacitor stations, generating plants, industrial plants, associated installations and substations, except those substations whose primary function is to feed a distribution system, will be paid overtime under the following rates:

The first two (2) hours after eight (8) regular hours Monday through Friday of overtime on a regular workday, shall be paid at one and one-half times the hourly rate of wage. All hours in excess of ten (10) hours will be at two (2) times the hourly rate of wage. The first eight (8) hours worked on Saturday will be paid at one and one-half (1-1/2) times the hourly rate of wage. All hours worked in excess of eight (8) hours on Saturday, and all hours worked on Sundays and holidays will be at the double the hourly rate of wage.

All overtime eligible hours performed on the above described work that is energized, shall be paid at the double the hourly rate of wage.

E. The first two (2) hours after eight (8) regular hours Monday through Friday and the first eight (8) hours on Saturday shall be paid at one and one-half times the hourly rate of wage. All other hours worked Monday through Saturday, and all hours worked on Sundays and holidays shall be paid at double the hourly rate of wage.

On a four-day, ten-hour weekly schedule, either Monday thru Thursday or Tuesday thru Friday schedule, all hours worked after ten shall be paid at double the hourly rate of wage. The Monday or Friday not utilized in the normal four-day, ten hour work week, and Saturday shall be paid at one and one half (1½) times the regular shift rate for the first eight (8) hours. All other hours worked Monday through Saturday, and all hours worked on Sundays and holidays shall be paid at double the hourly rate of wage.

F. All hours worked between the hours of 6:00 pm and 6:00 am, Monday through Saturday, shall be paid at a premium rate of 20% over the hourly rate of wage. All hours worked on Sundays shall be paid at one and one-half times the hourly rate of wage. All hours worked on holidays shall be paid at double the hourly rate of wage.

G. All hours worked on Saturdays shall be paid at one and one-half times the hourly rate of wage. All hours worked Monday through Saturday over twelve (12) hours and all hours worked on Sundays and holidays shall be paid at double the hourly rate of wage.

Holiday Codes

5. A. Holidays: New Year's Day, Memorial Day, Independence Day, Labor Day, Thanksgiving Day, Friday after Thanksgiving Day, and Christmas Day (7).

B. Holidays: New Year's Day, Memorial Day, Independence Day, Labor Day, Thanksgiving Day, Friday after Thanksgiving Day, the day before Christmas, and Christmas Day (8).

C. Holidays: New Year's Day, Presidents' Day, Memorial Day, Independence Day, Labor Day, Thanksgiving Day, the Friday after Thanksgiving Day, And Christmas Day (8).

D. Holidays: New Year's Day, Memorial Day, Independence Day, Labor Day, Thanksgiving Day, the Friday and Saturday after Thanksgiving Day, And Christmas Day (8).

H. Holidays: New Year's Day, Memorial Day, Independence Day, Thanksgiving Day, the Day after Thanksgiving Day, And Christmas (6).

Provided to Builders Exchange of WA, Inc. For usage Conditions Agreement see www.bxwa.com - Always Verify Scale

Holiday Codes Continued

5. I. Holidays: New Year's Day, Memorial Day, Independence Day, Labor Day, Thanksgiving Day, and Christmas Day (6).

J. Holidays: New Year's Day, Memorial Day, Independence Day, Thanksgiving Day, Friday after Thanksgiving Day, Christmas Eve Day, And Christmas Day (7).

K. Holidays: New Year's Day, Presidents' Day, Memorial Day, Independence Day, Labor Day, Thanksgiving Day, Friday After Thanksgiving Day, The Day Before Christmas, And Christmas Day (9).

L. Holidays: New Year's Day, Martin Luther King Jr. Day, Memorial Day, Independence Day, Labor Day, Thanksgiving Day, Friday after Thanksgiving Day, And Christmas Day (8).

N. Holidays: New Year's Day, Presidents' Day, Memorial Day, Independence Day, Labor Day, Veterans' Day, Thanksgiving Day, The Friday After Thanksgiving Day, And Christmas Day (9).

P. Holidays: New Year's Day, Memorial Day, Independence Day, Labor Day, Thanksgiving Day, Friday And Saturday After Thanksgiving Day, The Day Before Christmas, And Christmas Day (9). If A Holiday Falls On Sunday, The Following Monday Shall Be Considered As A Holiday.

Q. Paid Holidays: New Year's Day, Memorial Day, Independence Day, Labor Day, Thanksgiving Day, and Christmas Day (6).

R. Paid Holidays: New Year's Day, Memorial Day, Independence Day, Labor Day, Thanksgiving Day, Day After Thanksgiving Day, One-Half Day Before Christmas Day, And Christmas Day. (7 1/2).

S. Paid Holidays: New Year's Day, Presidents' Day, Memorial Day, Independence Day, Labor Day, Thanksgiving Day, And Christmas Day (7).

T. Paid Holidays: New Year's Day, Washington's Birthday, Memorial Day, Independence Day, Labor Day, Thanksgiving Day, The Friday After Thanksgiving Day, Christmas Day, And The Day Before Or After Christmas (9).

Z. Holidays: New Year's Day, Memorial Day, Independence Day, Labor Day, Veterans Day, Thanksgiving Day, the Friday after Thanksgiving Day, And Christmas Day (8).

6. A. Paid Holidays: New Year's Day, Presidents' Day, Memorial Day, Independence Day, Labor Day, Thanksgiving Day, the Friday after Thanksgiving Day, And Christmas Day (8).

E. Paid Holidays: New Year's Day, Day Before Or After New Year's Day, Presidents Day, Memorial Day, Independence Day, Labor Day, Thanksgiving Day, the Friday after Thanksgiving Day, Christmas Day, and a Half-Day On Christmas Eve Day. (9 1/2).

G. Paid Holidays: New Year's Day, Martin Luther King Jr. Day, Presidents' Day, Memorial Day, Independence Day, Labor Day, Veterans' Day, Thanksgiving Day, the Friday after Thanksgiving Day, Christmas Day, and Christmas Eve Day (11).

H. Paid Holidays: New Year's Day, New Year's Eve Day, Memorial Day, Independence Day, Labor Day, Thanksgiving Day, Friday After Thanksgiving Day, Christmas Day, The Day After Christmas, And A Floating Holiday (10).

I. Paid Holidays: New Year's Day, Memorial Day, Independence Day, Labor Day, Thanksgiving Day, Friday After Thanksgiving Day, And Christmas Day (7).

Provided to Builders Exchange of WA, Inc. For usage Conditions Agreement see www.bxwa.com - Always Verify Scale

Holiday Codes Continued

6. T. Paid Holidays: New Year's Day, Presidents' Day, Memorial Day, Independence Day, Labor Day, Thanksgiving Day, The Friday After Thanksgiving Day, The Last Working Day Before Christmas Day, And Christmas Day (9).

Z. Holidays: New Year's Day, Memorial Day, Independence Day, Labor Day, Thanksgiving Day, Friday after Thanksgiving Day, And Christmas Day (7). If a holiday falls on Saturday, the preceding Friday shall be considered as the holiday. If a holiday falls on Sunday, the following Monday shall be considered as the holiday.

7. A. Holidays: New Year's Day, Memorial Day, Independence Day, Labor Day, Thanksgiving Day, the Friday and Saturday after Thanksgiving Day, And Christmas Day (8). Any Holiday Which Falls On A Sunday Shall Be Observed As A Holiday On The Following Monday. If any of the listed holidays falls on a Saturday, the preceding Friday shall be a regular work day.

B. Holidays: New Year's Day, Memorial Day, Independence Day, Labor Day, Thanksgiving Day, the Friday and Saturday after Thanksgiving Day, And Christmas Day (8). Any holiday which falls on a Sunday shall be observed as a holiday on the following Monday. Any holiday which falls on a Saturday shall be observed as a holiday on the preceding Friday.

C. Holidays: New Year's Day, Martin Luther King Jr. Day, Memorial Day, Independence Day, Labor Day, Thanksgiving Day, the Friday after Thanksgiving Day, And Christmas Day (8). Any holiday which falls on a Sunday shall be observed as a holiday on the following Monday. Any holiday which falls on a Saturday shall be observed as a holiday on the preceding Friday.

D. Paid Holidays: New Year's Day, Memorial Day, Independence Day, Labor Day, Veteran's Day, Thanksgiving Day, the Friday after Thanksgiving Day, And Christmas Day (8). Unpaid Holidays: President's Day. Any paid holiday which falls on a Sunday shall be observed as a holiday on the following Monday. Any paid holiday which falls on a Saturday shall be observed as a holiday on the preceding Friday.

E. Holidays: New Year's Day, Memorial Day, Independence Day, Labor Day, Thanksgiving Day, the Friday after Thanksgiving Day, And Christmas Day (7). Any holiday which falls on a Sunday shall be observed as a holiday on the following Monday. Any holiday which falls on a Saturday shall be observed as a holiday on the preceding Friday.

F. Holidays: New Year's Day, Memorial Day, Independence Day, Labor Day, Thanksgiving Day, the Friday after Thanksgiving Day, the last working day before Christmas day and Christmas day (8). Any holiday which falls on a Sunday shall be observed as a holiday on the following Monday. Any holiday which falls on a Saturday shall be observed as a holiday on the preceding Friday.

G. Holidays: New Year's Day, Memorial Day, Independence Day, Labor Day, Thanksgiving Day, and Christmas Day (6). Any holiday which falls on a Sunday shall be observed as a holiday on the following Monday.

H. Holidays: New Year's Day, Martin Luther King Jr. Day, Independence Day, Memorial Day, Labor Day, Thanksgiving Day, the Friday after Thanksgiving Day, the Last Working Day before Christmas Day and Christmas Day (9). Any holiday which falls on a Sunday shall be observed as a holiday on the following Monday. Any holiday which falls on a Saturday shall be observed as a holiday on the preceding Friday.

I. Holidays: New Year's Day, President's Day, Independence Day, Memorial Day, Labor Day, Thanksgiving Day, The Friday After Thanksgiving Day, The Day Before Christmas Day And Christmas Day (9). Any holiday which falls on a Sunday shall be observed as a holiday on the following Monday. Any holiday which falls on a Saturday shall be observed as a holiday on the preceding Friday.

J. Holidays: New Year's Day, Independence Day, Memorial Day, Labor Day, Thanksgiving Day and Christmas Day (6). Any holiday which falls on a Sunday shall be observed as a holiday on the following Monday. Any holiday which falls on a Saturday shall be observed as a holiday on the preceding Friday.

Provided to Builders Exchange of WA, Inc. For usage Conditions Agreement see www.bxwa.com - Always Verify Scale

Holiday Codes Continued

7. K. Holidays: New Year's Day, Memorial Day, Independence Day, Thanksgiving Day, the Friday and Saturday after Thanksgiving Day, And Christmas Day (8). Any holiday which falls on a Sunday shall be observed as a holiday on the following Monday. Any holiday which falls on a Saturday shall be observed as a holiday on the preceding Friday.

L. Holidays: New Year's Day, Memorial Day, Labor Day, Independence Day, Thanksgiving Day, the Last Work Day before Christmas Day, And Christmas Day (7). Any holiday which falls on a Sunday shall be observed as a holiday on the following Monday. Any holiday which falls on a Saturday shall be observed as a holiday on the preceding Friday.

M. Paid Holidays: New Year's Day, The Day after or before New Year's Day, President's Day, Memorial Day, Independence Day, Labor Day, Thanksgiving Day, the Friday after Thanksgiving Day, Christmas Day, And the Day after or before Christmas Day (10). Any holiday which falls on a Sunday shall be observed as a holiday on the following Monday. Any holiday which falls on a Saturday shall be observed as a holiday on the preceding Friday.

N. Holidays: New Year's Day, Memorial Day, Independence Day, Labor Day, Thanksgiving Day, the Friday after Thanksgiving Day, And Christmas Day (7). Any holiday which falls on a Sunday shall be observed as a holiday on the following Monday. When Christmas falls on a Saturday, the preceding Friday shall be observed as a holiday.

P. Holidays: New Year's Day, Memorial Day, Independence Day, Labor Day, Thanksgiving Day, Friday after Thanksgiving Day, And Christmas Day (7). Any holiday which falls on a Sunday shall be observed as a holiday on the following Monday.

Q. Holidays: New Year's Day, Memorial Day, Independence Day, Labor Day, Thanksgiving Day, the Friday after Thanksgiving Day, the Last Working Day before Christmas Day and Christmas Day (8). Any holiday which falls on a Sunday shall be observed as a holiday on the following Monday. If any of the listed holidays falls on a Saturday, the preceding Friday shall be a regular work day.

R. Paid Holidays: New Year's Day, the day after or before New Year's Day, President's Day, Memorial Day, Independence Day, Labor Day, Thanksgiving Day, the Friday after Thanksgiving Day, Christmas Day, and the day after or before Christmas Day (10). If any of the listed holidays fall on Saturday, the preceding Friday shall be observed as the holiday. If any of the listed holidays falls on a Sunday, the day observed by the Nation shall be considered a holiday and compensated accordingly.

S. Paid Holidays: New Year's Day, Memorial Day, Independence Day, Labor Day, Thanksgiving Day, Friday after Thanksgiving Day, Christmas Day, the Day after Christmas, and A Floating Holiday (9). If any of the listed holidays falls on a Sunday, the day observed by the Nation shall be considered a holiday and compensated accordingly.

T. Paid Holidays: New Year's Day, the Day after or before New Year's Day, President's Day, Memorial Day, Independence Day, Labor Day, Thanksgiving Day, the Friday after Thanksgiving Day, Christmas Day, and The Day after or before Christmas Day. (10). If any of the listed holidays falls on a Sunday, the day observed by the Nation shall be considered a holiday and compensated accordingly. Any holiday which falls on a Saturday shall be observed as a holiday on the preceding Friday.

Note Codes

8. A. In addition to the hourly wage and fringe benefits, the following depth premiums apply to depths of fifty feet or more:
Over 50' To 100' -$2.00 per Foot for Each Foot Over 50 Feet
Over 100' To 150' -$3.00 per Foot for Each Foot Over 100 Feet
Over 150' To 220' -$4.00 per Foot for Each Foot Over 150 Feet
Over 220' -$5.00 per Foot for Each Foot Over 220 Feet

Provided to Builders Exchange of WA, Inc. For usage Conditions Agreement see www.bxwa.com - Always Verify Scale

Note Codes Continued

8. C. In addition to the hourly wage and fringe benefits, the following depth premiums apply to depths of fifty feet or more:
Over 50' To 100' -$1.00 per Foot for Each Foot Over 50 Feet
Over 100' To 150' -$1.50 per Foot for Each Foot Over 100 Feet
Over 150' To 200' -$2.00 per Foot for Each Foot Over 150 Feet
Over 200' -Divers May Name Their Own Price

D. Workers working with supplied air on hazmat projects receive an additional $1.00 per hour.

L. Workers on hazmat projects receive additional hourly premiums as follows -Level A: $0.75, Level B: $0.50, And Level C: $0.25.

M. Workers on hazmat projects receive additional hourly premiums as follows: Levels A & B: $1.00, Levels C & D: $0.50.

N. Workers on hazmat projects receive additional hourly premiums as follows -Level A: $1.00, Level B: $0.75, Level C: $0.50, And Level D: $0.25.

P. Workers on hazmat projects receive additional hourly premiums as follows -Class A Suit: $2.00, Class B Suit: $1.50, Class C Suit: $1.00, And Class D Suit $0.50.

Q. The highest pressure registered on the gauge for an accumulated time of more than fifteen (15) minutes during the shift shall be used in determining the scale paid.

R. Effective August 31, 2012 – A Traffic Control Supervisor shall be present on the project whenever flagging or spotting or other traffic control labor is being utilized. A Traffic Control Laborer performs the setup, maintenance and removal of all temporary traffic control devices and construction signs necessary to control vehicular, bicycle, and pedestrian traffic during construction operations. Flaggers and Spotters shall be posted where shown on approved Traffic Control Plans or where directed by the Engineer. All flaggers and spotters shall possess a current flagging card issued by the State of Washington, Oregon, Montana, or Idaho. These classifications are only effective on or after August 31, 2012.

S. Effective August 31, 2012 – A Traffic Control Supervisor shall be present on the project whenever flagging or spotting or other traffic control labor is being utilized. Flaggers and Spotters shall be posted where shown on approved Traffic Control Plans or where directed by the Engineer. All flaggers and spotters shall possess a current flagging card issued by the State of Washington, Oregon, Montana, or Idaho. This classification is only effective on or after August 31, 2012.

T. Effective August 31, 2012 – A Traffic Control Laborer performs the setup, maintenance and removal of all temporary traffic control devices and construction signs necessary to control vehicular, bicycle, and pedestrian traffic during construction operations. Flaggers and Spotters shall be posted where shown on approved Traffic Control Plans or where directed by the Engineer. All flaggers and spotters shall possess a current flagging card issued by the State of Washington, Oregon, Montana, or Idaho. This classification is only effective on or after August 31, 2012.

U. Workers on hazmat projects receive additional hourly premiums as follows – Class A Suit: $2.00, Class B Suit: $1.50, And Class C Suit: $1.00. Workers performing underground work receive an additional $0.40 per hour for any and all work performed underground, including operating, servicing and repairing of equipment. The premium for underground work shall be paid for the entire shift worked. Workers who work suspended by a rope or cable receive an additional $0.50 per hour. The premium for work suspended shall be paid for the entire shift worked. Workers who do "pioneer" work (break open a cut, build road, etc.) more than one hundred fifty (150) feet above grade elevation receive an additional $0.50 per hour.

Provided to Builders Exchange of WA, Inc. For usage Conditions Agreement see www.bxwa.com - Always Verify Scale

APPENDIX B

Provided to Builders Exchange of WA, Inc. For usage Conditions Agreement see www.bxwa.com - Always Verify Scale

NE 181st ST Sidewalk Project(s)
Project Parcel #011410-0585 / Jim Perkins

IMPROVEMENTS PERMIT

The City of Kenmore (hereafter "City") currently has a Project in the vicinity of property owned by Jim Perkins, (hereafter "Owner") located at 7000 NE 181st Street, Kenmore, WA (hereafter "Property"). The City agrees to perform certain work on the Property to facilitate the construction of the project.

1. **Scope of Permit.** Now, therefore, in consideration of the mutual covenants contained herein and other valuable consideration, the receipt and sufficiency of which are hereby acknowledged, the Owner hereby grants to the City, its contractors or assigns, subject to the conditions hereafter set forth, a temporary permit over the following described property:

Property description: ALDERWOOD MANOR # 14 LESS CO RD Plat Block: 11 Plat Lot: 12

Tax Parcel No.: 011410-0585

1.1. Driveway Reconstruction. The Owner hereby grants to the City, its contractors or assigns, subject to the conditions hereafter set forth, a temporary permit to enter upon said parcel of land and work on the land for the purposes of reconstructing a portion of Owner's existing / proposed driveway so as to conform to said improvements. The reconstruction of Owner's driveway shall occur on the portion of Owner's land approximately shown **Area D** on **Exhibit "A"**, attached hereto and made a part hereof by reference.

Any portion of Owner's driveway lying within the City road right-of-way shall be paved. Reconstruction of Owner's driveway outside the City road right-of-way shall be equal in kind to the existing driveway on private property.

RETURN W/ SEPERATE EXHIBIT FOR DRIVEWAYS

~~Select One: X Accepted~~ ☐ Rejected ☐ Not Applicable

1.2. Utility Undergrounding / Relocation. The Owner hereby grants to the City, its contractors or assigns, subject to the conditions hereafter set forth, a temporary Permit over Owner's Property approximately shown as **Area U** on **Exhibit "A"**, attached hereto and made a part hereof by this reference, necessary to trench and/or relocate aerial utility lines from the right-of-way to connection point(s) as determined by the City. This work may include but is not limited to pavement, landscaping and other ground surface removal, neat-line trenching and backfill, conduit installation, conduit attachment to buildings, or service pole / aerial utility line relocation. Undergrounding and/or relocation shall be provided to reestablish existing electrical service; any system upgrades are the responsibility of the Owner. A typical conduit attachment to building photo is included for reference.

Select One: X Accepted ☐ Rejected ☐ Not Applicable

1.3. Property Restoration. The Owner hereby grants to the City, its contractors or assigns, subject to the conditions hereafter set forth, a temporary permit to enter upon

Provided to Builders Exchange of WA, Inc. For usage Conditions Agreement see www.bxwa.com - Always Verify Scale

said parcel of land and work on the land for the purposes of restoring a portion of Owner's remaining property so as to conform to said improvements The property restoration shall occur on the portion of Owner's land approximately shown as **Area R** on **Exhibit "A"**, attached hereto and made a part hereof by this reference.

Select One: X Accepted ☐ Rejected ☐ Not Applicable

2. Conditions. This Permit is granted and accepted subject to the following conditions:

a. This Improvements Permit will commence when construction starts on the Project and terminate no later than December 31, 2018.

b. Upon completion of the construction work, the City shall leave the premises substantially the same as it was on the day work commenced.

c. Owner shall not obstruct, or allow any tenant or third party to obstruct, or, in any manner, prevent or interfere with performance of the work described in paragraph 1.

d. If the contractor does not have permission to enter your property for the purposes accepted above, you will need to take care of it at a later date at your own expense.

e. Owner grants permission to the City, its contractors or assigns, the right to access the property beyond the shown limits of the permit area, as necessary, to construct necessary improvements.

3. WORK WILL BE LIMITED TO SOUTH PROJECT IMPACTS FOR UTILITY Jim Perkins Relocation ONLY.

By: _____
Printed Name: JAMES PERKINS
Title: OWNER
Date: 11-25-15

By: _____
Printed Name: _____
Title: _____
Date: _____

Accepted by the City of Kenmore

By: _____
Printed Name: Kent Vaughan
Title: Project Manager
Date: 11/5/2015

Provided to Builders Exchange of WA, Inc. For usage Conditions Agreement see www.bxwa.com - Always Verify Scale

Perteet Inc.
2707 Colby Avenue, Suite 900
Everett, Washington 98201
425-252-7700 | 1-800-615-9900

LEGEND
PROJECT A
PROJECT B

Revision: 3/3/2016
Underground conduits and restore trench area in kind (~3'x50'= 150 SF) to new pole set in front of existing building; Reconnect aerial lines from new pole to existing pole behind building.

Approval:
Date: 3-7-16

SCALE
30' 0 FEET 30' 60'

AREA U
130 SF

AREA U
809 SF

AREA U
367 SF

AREA D
1,430 SF

40'
41'
38'
26'
33'

AREA R
107 SF
1'

OP
OP

POLE INSTALLED BY PSE

SD
SD

69'

NE 181ST ST

City of Kenmore
NE 181st North Side Sidewalk Improvements
PRELIMINARY-SUBJECT TO CHANGE
August 31, 2015

0114100585
Jim Perkins

Provided to Builders Exchange of WA, Inc. For usage Conditions Agreement see www.bxwa.com - Always Verify Scale

City Of Kenmore, Washington

October 2, 2015

Kenmore Family Associates
7026 NE 181st Street
KENMORE, WA 98028

Subject: Temporary Construction Permit for property located at 7026 NE 181st Street – Parcel # 011410-0580

Dear Property Owner,

The City is nearing completion of its design to install future sidewalks along NE 181st Street in 2016. In order to construct the sidewalks, the City will need to access your property to make adjustments to your property to provide the *best* transition from your property to the street. These improvements are suggested as we will be changing the existing right of way in front of your property.

The adjustments consist of providing smooth transitions into your property at the back of sidewalk. Additionally the project will be undergrounding utilities along NE 181st Street, which will require revisions to utility poles (power and communications) that currently exist on your property. Where we make these adjustments, we will return all disturbed areas as close to their original condition as possible.

It is our desire to provide a smooth transition, but we cannot do this without your permission. It is the City's intention to make these adjustments to your property at no cost to you. I have enclosed a copy of the permit document for your review and consideration. We request that you contact the City by **Friday October 16th** to schedule a field meeting so that we may review our permit documents with you and receive any input you may have regarding the suggested improvements.

If you have any questions, please do not hesitate to contact me via email at kvaughan@kenmorewa.gov or by phone at (425) 984-6151.

Sincerely,

Kent Vaughan
Senior Civil Engineer / NE 181st ST Sidewalks Project Manager

Enclosures

18120 68th Ave NE · PO Box 82607 · Kenmore, WA 98028
Office: (425) 398-8900 · Fax: (425) 481-3236 · cityhall@kenmorewa.gov
www.kenmorewa.gov

Provided to Builders Exchange of WA, Inc. For usage Conditions Agreement see www.bxwa.com - Always Verify Scale

NE 181st ST Sidewalk Project(s)
Project Parcel #011410-0580 / Kenmore Family Associates

IMPROVEMENTS PERMIT

The City of Kenmore (hereafter "City") currently has a Project in the vicinity of property owned by Kenmore Family Associates, (hereafter "Owner") located at 7026 NE 181st Street, Kenmore, WA (hereafter "Property"). The City agrees to perform certain work on the Property to facilitate the construction of the project.

1. Scope of Permit. Now, therefore, in consideration of the mutual covenants contained herein and other valuable consideration, the receipt and sufficiency of which are hereby acknowledged, the Owner hereby grants to the City, its contractors or assigns, subject to the conditions hereafter set forth, a temporary permit over the following described property:

Property description: ALDERWOOD MANOR # 14 W 85.95 FT LESS CO RD

Tax Parcel No.: 011410-0580

1.1. Driveway Reconstruction. The Owner hereby grants to the City, its contractors or assigns, subject to the conditions hereafter set forth, a temporary permit to enter upon said parcel of land and work on the land for the purposes of reconstructing a portion of Owner's existing / proposed driveway so as to conform to said improvements. The reconstruction of Owner's driveway shall occur on the portion of Owner's land approximately shown **Area D** on **Exhibit "A"**, attached hereto and made a part hereof by reference.

Any portion of Owner's driveway lying within the City road right-of-way shall be paved. Reconstruction of Owner's driveway outside the City road right-of-way shall be equal in kind to the existing driveway on private property.

Select One: ☐ Accepted ☐ Rejected x Not Applicable

1.2. Utility Undergrounding / Relocation. The Owner hereby grants to the City, its contractors or assigns, subject to the conditions hereafter set forth, a temporary Permit over Owner's Property approximately shown as **Area U** on **Exhibit "A"**, attached hereto and made a part hereof by this reference, necessary to trench and/or relocate aerial utility lines from the right-of-way to connection point(s) as determined by the City. This work may include but is not limited to pavement, landscaping and other ground surface removal, neat-line trenching and backfill, conduit installation, conduit attachment to buildings, or service pole / aerial utility line relocation. Undergrounding and/or relocation shall be provided to reestablish existing electrical service; any system upgrades are the responsibility of the Owner. A typical conduit attachment to building photo is included for reference.

Select One: X Accepted ☐ Rejected ☐ Not Applicable

1.3. Property Restoration. The Owner hereby grants to the City, its contractors or assigns, subject to the conditions hereafter set forth, a temporary permit to enter upon

Provided to Builders Exchange of WA, Inc. For usage Conditions Agreement see www.bxwa.com - Always Verify Scale

said parcel of land and work on the land for the purposes of restoring a portion of Owner's remaining property so as to conform to said improvements The property restoration shall occur on the portion of Owner's land approximately shown as **Area R** on **Exhibit "A"**, attached hereto and made a part hereof by this reference.

Select One: X Accepted ☐ Rejected ☐ Not Applicable

2. Conditions. This Permit is granted and accepted subject to the following conditions:

a. This Improvements Permit will commence when construction starts on the Project and terminate no later than December 31, 2018.

b. Upon completion of the construction work, the City shall leave the premises substantially the same as it was on the day work commenced.

c. Owner shall not obstruct, or allow any tenant or third party to obstruct, or, in any manner, prevent or interfere with performance of the work described in paragraph 1.

d. If the contractor does not have permission to enter your property for the purposes accepted above, you will need to take care of it at a later date at your own expense.

e. Owner grants permission to the City, its contractors or assigns, the right to access the property beyond the shown limits of the permit area, as necessary, to construct necessary improvements.

Kenmore Family Associates

By: Al. Campo
Printed Name: Alicia Campo
Title: Associate Director
Date: 2/11/16

By: _____
Printed Name: _____
Title: _____
Date: _____

Accepted by the City of Kenmore

By: _____
Printed Name: Kent Vaughan
Title: 181st ST Sidewalk PM
Date: 2/19/2016

Provided to Builders Exchange of WA, Inc. For usage Conditions Agreement see www.bxwa.com - Always Verify Scale

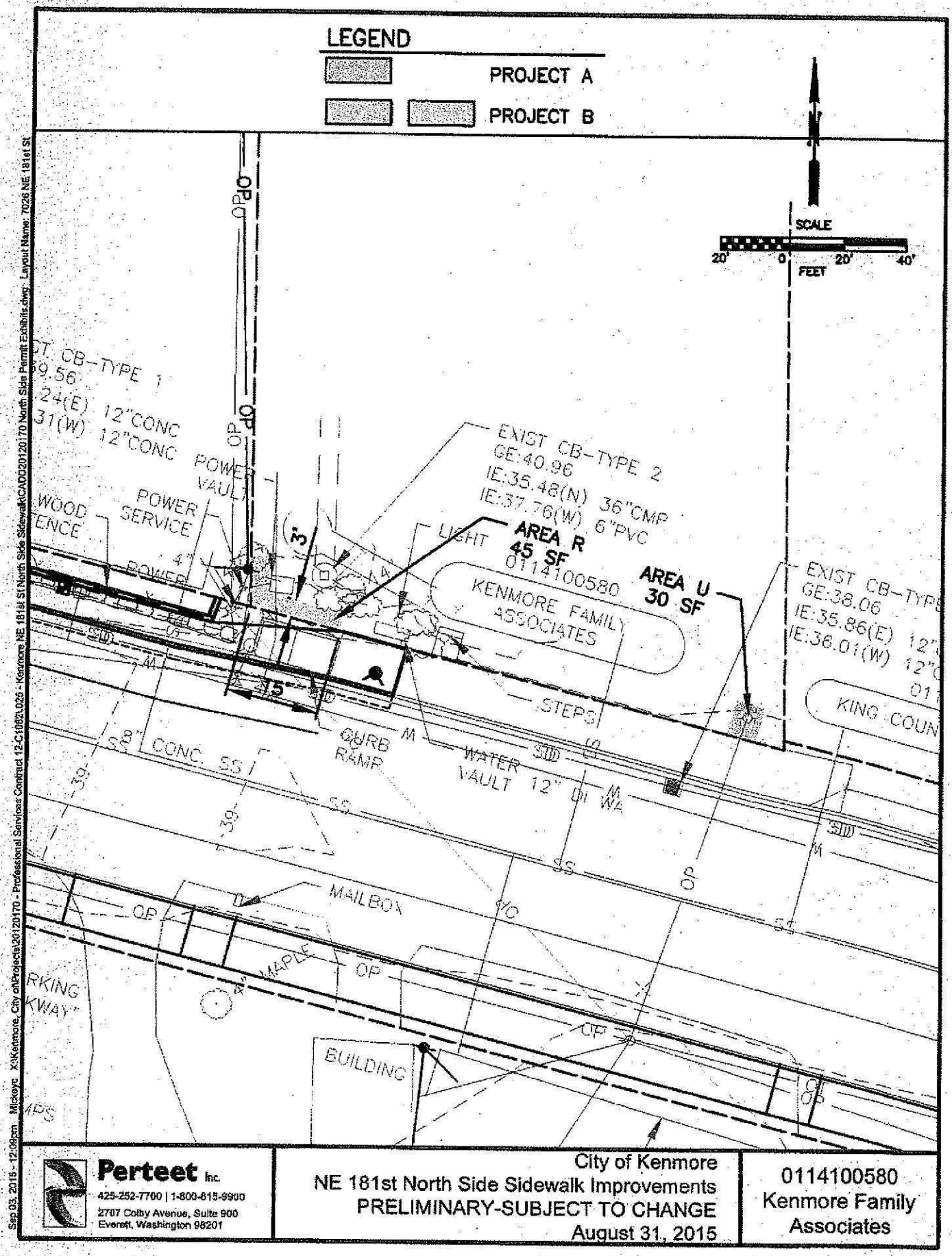

Perteet Inc.
425-252-7700 | 1-800-615-9900
2707 Colby Avenue, Suite 900
Everett, Washington 98201

City of Kenmore
NE 181st North Side Sidewalk Improvements
PRELIMINARY-SUBJECT TO CHANGE
August 31, 2015

0114100580
Kenmore Family Associates

Sep 03, 2015 - 12:09pm Mickeyc X:\Kenmore, City of\Projects\20120170 - Professional Services Contract 12-C10821.025 - Kenmore NE 181st St North Side Sidewalk\CAD\20120170 North Side Permit Exhibits.dwg; Layout Name: 7026 NE 181st St

Provided to Builders Exchange of WA, Inc. For usage Conditions Agreement see www.bxwa.com - Always Verify Scale

Christina King

From: Heron Landing
Sent: Thursday, February 11, 2016 9:29 AM
To: Christina King
Subject: re work on 181st
Attachments: 20160211094513.pdf

Christina,

I met with Kent from the City of Kenmore today. There is going to be a sidewalk put in on 181st and they need to do some work on our property. Attached is the permission to do work. Apparently he mailed it in October, but to the wrong address. If you sign it i will email it back. I guess we are the last ones they are waiting on.

Thanks

Regina E Williams
Heron Landing Apartments for Seniors
7025 NE 182nd St.
Kenmore, WA 98028
& Heron Run for Families
7021 NE 182nd St.
Kenmore, WA 98028
Phone: 425-398-1688
FAX: 425-398-5799

Provided to Builders Exchange of WA, Inc. For usage Conditions Agreement see www.bxwa.com - Always Verify Scale

NE 181st ST Sidewalk Project(s)
Project Parcel #011410-0620 / Safeway Inc Store 3500

IMPROVEMENTS PERMIT

The City of Kenmore (hereafter "City") currently has a Project in the vicinity of property owned by Safeway Inc. Store 3500, (hereafter "Owner") located at 6850 NE Bothell Way, Kenmore, WA (hereafter "Property"). The City agrees to perform certain work on the Property to facilitate the construction of the project.

1. Scope of Permit. Now, therefore, in consideration of the mutual covenants contained herein and other valuable consideration, the receipt and sufficiency of which are hereby acknowledged, the Owner hereby grants to the City, its contractors or assigns, subject to the conditions hereafter set forth, a temporary permit over the following described property:

Property description: ALDERWOOD MANOR #14 LESS CO RD & LESS POR FOR RD PER REC #20070615002934

Tax Parcel No.: 011410-0620

1.1. Driveway Reconstruction. The Owner hereby grants to the City, its contractors or assigns, subject to the conditions hereafter set forth, a temporary permit to enter upon said parcel of land and work on the land for the purposes of reconstructing a portion of Owner's existing / proposed driveway so as to conform to said improvements. The reconstruction of Owner's driveway shall occur on the portion of Owner's land approximately shown **Area D** on **Exhibit "A"**, attached hereto and made a part hereof by reference.

Any portion of Owner's driveway lying within the City road right-of-way shall be paved. Reconstruction of Owner's driveway outside the City road right-of-way shall be equal in kind to the existing driveway on private property.

Select One: X Accepted ☐ Rejected ☐ Not Applicable

1.2. Utility Undergrounding / Relocation. The Owner hereby grants to the City, its contractors or assigns, subject to the conditions hereafter set forth, a temporary Permit over Owner's Property approximately shown as **Area U** on **Exhibit "A"**, attached hereto and made a part hereof by this reference, necessary to trench and/or relocate aerial utility lines from the right-of-way to connection point(s) as determined by the City. This work may include but is not limited to pavement, landscaping and other ground surface removal, neat-line trenching and backfill, conduit installation, conduit attachment to buildings, or service pole / aerial utility line relocation. Undergrounding and/or relocation shall be provided to reestablish existing electrical service; any system upgrades are the responsibility of the Owner.

Select One: ☐ Accepted ☐ Rejected X Not Applicable

Provided to Builders Exchange of WA, Inc. For usage Conditions Agreement see www.bxwa.com - Always Verify Scale

1.3. Property Restoration. The Owner hereby grants to the City, its contractors or assigns, subject to the conditions hereafter set forth, a temporary permit to enter upon said parcel of land and work on the land for the purposes of restoring a portion of Owner's remaining property so as to conform to said improvements The property restoration shall occur on the portion of Owner's land approximately shown as **Area R** on **Exhibit "A",** attached hereto and made a part hereof by this reference.

Select One: ☐ Accepted ☐ Rejected X Not Applicable

2. Conditions. This Permit is granted and accepted subject to the following conditions:

a. This Improvements Permit will commence when construction starts on the Project and terminate no later than December 31, 2018.

b. Upon completion of the construction work, the City shall leave the premises substantially the same as it was on the day work commenced.

c. Owner shall not obstruct, or allow any tenant or third party to obstruct, or, in any manner, prevent or interfere with performance of the work described in paragraph 1.

d. If the contractor does not have permission to enter your property for the purposes accepted above, you will need to take care of it at a later date at your own expense.

e. Owner grants permission to the City, its contractors or assigns, the right to access the property beyond the shown limits of the permit area, as necessary, to construct necessary improvements.

Safeway Inc. Store 3500

By: _____
Printed Name: _____
Title: _____
Date: _____

By: _____
Printed Name: _____
Title: _____
Date: _____

Accepted by the City of Kenmore

By: _____
Printed Name: _____
Title: _____
Date: _____

Provided to Builders Exchange of WA, Inc. For usage Conditions Agreement see www.bxwa.com - Always Verify Scale

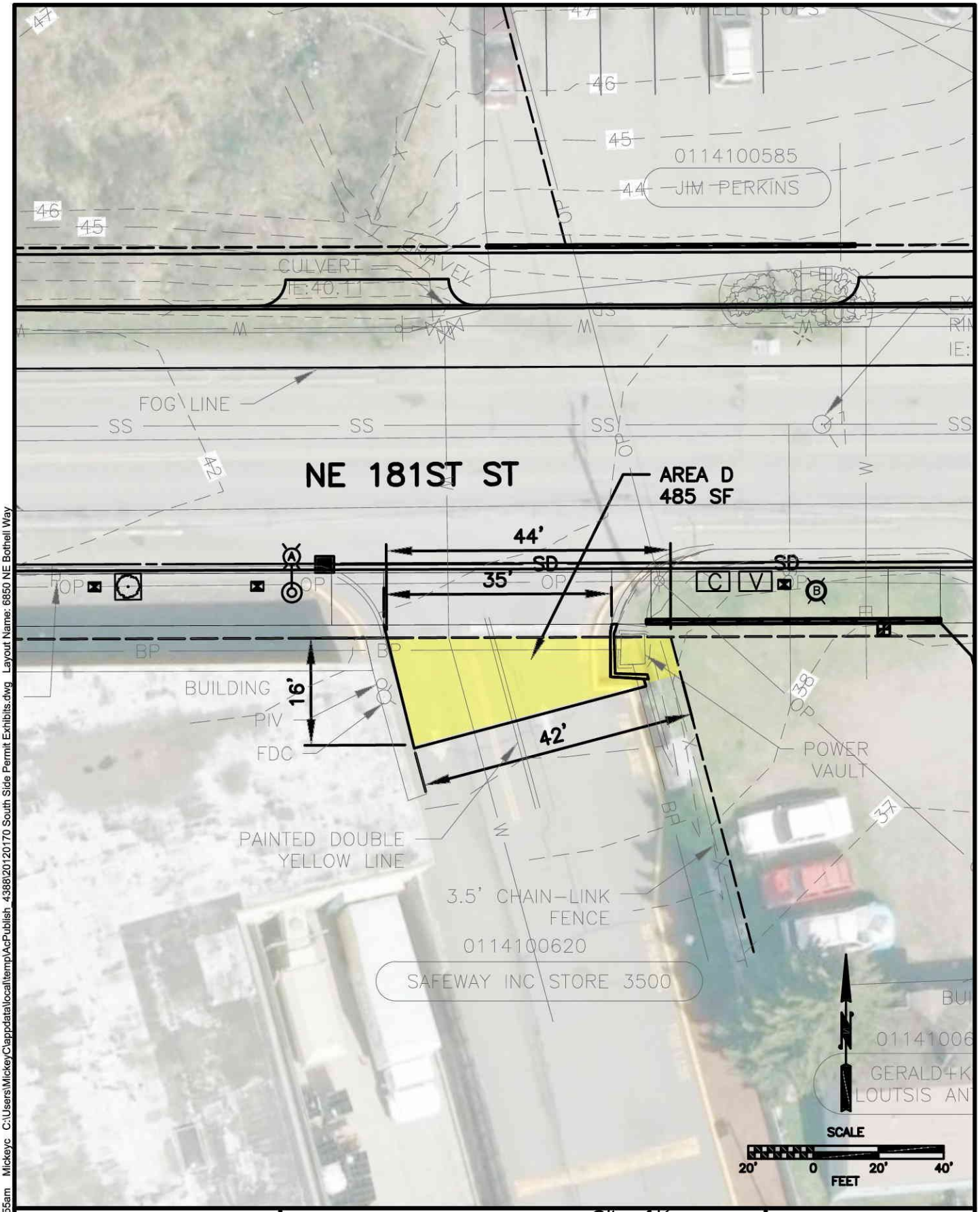

Sep 03, 2015 - 11:55am Mickeyc C:\Users\Mickey\Clappdata\local\temp\AcPublish_4388\20120170 South Side Permit Exhibits.dwg Layout Name: 6850 NE Bothell Way

Perteet Inc.
425-252-7700 | 1-800-615-9900
2707 Colby Avenue, Suite 900
Everett, Washington 98201

City of Kenmore
NE 181st South Side Sidewalk Improvements
PRELIMINARY-SUBJECT TO CHANGE
August 31, 2015

0114100620
Safeway Inc. Store

Provided to Builders Exchange of WA, Inc. For usage Conditions Agreement see www.bxwa.com - Always Verify Scale

APPENDIX C

Provided to Builders Exchange of WA, Inc. For usage Conditions Agreement see www.bxwa.com - Always Verify Scale

SCHEDULE 74 UNDERGROUND CONVERSION

Project Construction Agreement

Project Name: KENMORE – NE 181ST ST. S74
Project Number: 101093868

THIS Agreement, dated as of this ____ day of _____ , 200__, is made by and between The City of Kenmore, a municipal corporation (the "Government Entity"), and PUGET SOUND ENERGY, Inc., a Washington Corporation (the "Company").

RECITALS

A. The Company is a public service company engaged in the sale and distribution of electric energy, and pursuant to its franchise or other rights from the Government Entity, currently locates its electric distribution facilities within the jurisdictional boundaries of the Government Entity.

B. The Government Entity has determined that it is necessary to replace the existing overhead electric distribution system within the area specified in the Project Plan (as defined below) (the "Conversion Area") with a comparable underground electric distribution system, all as more specifically described in the Project Plan (the "Conversion Project").

C. The Government Entity and the Company have previously entered into a Project Design Agreement dated as of 9/15/15 (the "Design Agreement"), pursuant to which the parties completed certain engineering design, cost assessment, operating rights planning and other preliminary work relating to the Conversion Project and, in connection with that effort, developed the Project Plan.

D. The Government Entity and the Company wish to execute this written contract in accordance with Schedule 74 of the Company's Electric Tariff G ("Schedule 74") to govern the completion of the Conversion Project, which both parties intend shall qualify as an underground conversion under the terms of Schedule 74.

AGREEMENT

The Government Entity and the Company therefore agree as follows:

1. Definitions.

(a) Unless specifically defined otherwise herein, all terms defined in Schedule 74 shall have the same meanings when used in this Agreement, including, without limitation, the following:

i) Cost of Conversion;
ii) Public Thoroughfare;
iii) Temporary Service;
iv) Trenching and Restoration;
v) Underground Distribution System; and
vi) Underground Service Lines.

(b) "Company-Initiated Upgrade" shall mean any feature of the Underground Distribution System which is required by the Company and is not reasonably required to make the Underground Distribution System comparable to the overhead distribution system being replaced. For purposes of the foregoing, a "comparable" system shall include, unless the Parties otherwise agree, the number of empty ducts (not to exceed two (2), typically having a diameter of 6" or less)

Provided to Builders Exchange of WA, Inc. For usage Conditions Agreement see www.bxwa.com - Always Verify Scale

of such diameter and number as may be specified and agreed upon in the Project Plan necessary to replicate the load-carrying capacity (system amperage class) of the overhead system being replaced.

(c) "Estimated Reimbursable Private Conversion Costs" shall mean the Company's good faith estimate of the Reimbursable Private Conversion Costs, as specified in the Project Plan and as changed and adjusted from time to time in accordance with Section 6, below.

(d) "Estimated Reimbursable Temporary Service Costs" shall mean the Company's good faith estimate of the Reimbursable Temporary Service Costs, as specified in the Project Plan and as changed and adjusted from time to time in accordance with Section 6, below.

(e) "Estimated Reimbursable Upgrade Costs" shall mean the Company's good faith estimate of the Reimbursable Upgrade Costs, as specified in the Project Plan and as changed and adjusted from time to time in accordance with Section 6, below.

(f) "Estimated Shared Company Costs" shall mean the Company's good faith estimate of the Shared Company Costs, as specified in the Project Plan and as changed and adjusted from time to time in accordance with Section 6, below.

(g) "Estimated Shared Government Costs" shall mean the Government Entity's good faith estimate of the Shared Government Costs, as specified in the Project Plan and as changed and adjusted from time to time in accordance with Section 6, below.

(h) "Government-Requested Upgrade" shall mean any feature of the Underground Distribution System which is requested by the Government Entity and is not reasonably required to make the Underground Distribution System comparable to the overhead distribution system being replaced. For purposes of the foregoing, any empty ducts installed at the request of the Government Entity shall be a Government-Requested Upgrade.

(i) "Party" shall mean either the Company, the Government Entity, or both.

(j) "Private Property Conversion" shall mean that portion, if any, of the Conversion Project for which the existing overhead electric distribution system is located, as of the date determined in accordance with Schedule 74, (i) outside of the Public Thoroughfare, or (ii) pursuant to rights not derived from a franchise previously granted by the Government Entity or pursuant to rights not otherwise previously granted by the Government Entity.

(k) "Project Plan" shall mean the project plan developed by the Parties under the Design Agreement and attached hereto as Exhibit A, as the same may be changed and amended from time to time in accordance with Section 6, below. The Project Plan includes, among other things, (i) a detailed description of the Work that is required to be performed by each Party and any third party, (ii) the applicable requirements and specifications for the Work, (iii) a description of the Operating Rights that are required to be obtained by each Party for the Conversion Project (and the requirements and specifications with respect thereto), (iv) an itemization and summary of the Estimated Shared Company Costs, Estimated Shared Government Costs, Estimated Reimbursable Private Conversion Costs (if any), Estimated Reimbursable Temporary Service Costs (if any) and Estimated Reimbursable Upgrade Costs (if any), and (v) the Work Schedule.

(l) "Operating Rights" shall mean sufficient space and legal rights for the construction, operation, repair, and maintenance of the Underground Distribution System.

(m) "Reimbursable Private Conversion Costs" shall mean (i) all Costs of Conversion, if any, incurred by the Company which are attributable to a Private Property Conversion, less (ii) the distribution pole replacement costs (if any) that would be avoided by the Company on account of such Private Property Conversion, as determined consistent with the applicable Company distribution facilities

Provided to Builders Exchange of WA, Inc. For usage Conditions Agreement see www.bxwa.com - Always Verify Scale

replacement program, plus (iii) just compensation as provided by law for the Company's interests in real property on which such existing overhead distribution system was located prior to conversion; provided that the portion of the Reimbursable Private Conversion Costs attributable to the Costs of Conversion under subparagraph (i) of this paragraph shall not exceed the Estimated Reimbursable Private Conversion Costs without the prior written authorization of the Government Entity.

(n) "Reimbursable Temporary Service Costs" shall mean all costs incurred by the Company which are attributable to (i) any facilities installed as part of the Conversion Project to provide Temporary Service, as provided for in Schedule 74, and (ii) the removal of any facilities installed to provide Temporary Service (less salvage value of removed equipment); provided that the Reimbursable Temporary Service Costs shall not exceed the Estimated Reimbursable Temporary Service Costs without the prior written authorization of the Government Entity.

(o) "Reimbursable Upgrade Costs" shall mean all Costs of Conversion incurred by the Company which are attributable to any Government-Requested Upgrade; provided that the Reimbursable Upgrade Costs shall not exceed the Estimated Reimbursable Upgrade Costs without the prior written authorization of the Government Entity.

(p) "Shared Company Costs" shall mean all Costs of Conversion (other than Reimbursable Upgrade Costs, Reimbursable Private Conversion Costs and Reimbursable Temporary Service Costs) incurred by the Company in connection with the Conversion Project; provided, however, that the Shared Company Costs shall not exceed the Estimated Shared Company Costs without the prior written authorization of the Government Entity. For the avoidance of doubt, the "Shared Company Costs" shall, as and to the extent specified in the Design Agreement, include the actual, reasonable costs to the Company for the "Design Work" performed by the Company under the Design Agreement.

(q) "Shared Government Costs" shall mean all Costs of Conversion incurred by the Government Entity in connection with (i) any duct and vault installation Work which the Parties have specified in the Project Plan is to be performed by the Government Entity as part of the Government Work, and (ii) the acquisition of any Operating Rights which the Parties have, by mutual agreement, specified in the Project Plan are to be obtained by the Government Entity for the Conversion Project, but only to the extent attributable to that portion of such Operating Rights which is necessary to accommodate the facilities of the Company; provided, however, that the Shared Government Costs shall not exceed the Estimated Shared Government Costs without the prior written authorization of the Company.

(r) "Total Shared Costs" shall mean the sum of the Shared Company Costs and the Shared Government Costs. For the avoidance of doubt, the Total Shared Costs shall not include, without limitation, (i) costs to the Government Entity for Trenching and Restoration, or (ii) costs associated with any joint use of trenches by other utilities as permitted under Section 3(b).

(s) "Work" shall mean all work to be performed in connection with the Conversion Project, as more specifically described in the Project Plan, including, without limitation, the Company Work (as defined in Section 2(a), below) and the Government Work (as defined in Section 3(a), below).

(t) "Work Schedule" shall mean the schedule specified in the Project Plan which sets forth the milestones for completing the Work, as the same may be changed and amended from time to time in accordance with Section 6, below.

2. Obligations of the Company.

(a) Subject to the terms and conditions of this Agreement, the Company shall do the following as specified in, and in accordance with the design and construction specifications and other requirements set forth in, the Project Plan (the "Company Work"):

Provided to Builders Exchange of WA, Inc. For usage Conditions Agreement see www.bxwa.com - Always Verify Scale

i) furnish and install an Underground Distribution System within the Conversion Area (excluding any duct and vault installation or other Work which the Parties have specified in the Project Plan is to be performed by the Government Entity);
ii) provide a Company inspector on-site at the times specified in the Work Schedule to inspect the performance of any duct and vault installation Work which the Parties have specified in the Project Plan is to be performed by the Government Entity; and
iii) upon connection of those persons or entities to be served by the Underground Distribution System and removal of facilities of any other utilities that are connected to the poles of the overhead system, remove the existing overhead system (including associated wires and Company-owned poles) of 15,000 volts or less within the Conversion Area except for Temporary Services.

(b) Upon request of the Government Entity, the Company shall provide periodic reports of the progress of the Company Work identifying (i) the Company Work completed to date, (ii) the Company Work yet to be completed, and (iii) an estimate regarding whether the Conversion Project is on target with respect to the Estimated Shared Company Costs, the Estimated Reimbursable Private Conversion Costs (if any), the Estimated Reimbursable Temporary Service Costs (if any), the Estimated Reimbursable Upgrade Costs (if any) and the Work Schedule.

(c) Except as otherwise provided in the Company's Electric Tariff G, the Company shall own, operate and maintain all electrical facilities installed pursuant to this Agreement including, but not limited to, the Underground Distribution System and Underground Service Lines.

(d) Subject to the terms and conditions of this Agreement, the Company shall perform all Company Work in accordance with the Project Plan, the Work Schedule and this Agreement.

3. Obligations of the Government Entity.

(a) Subject to the terms and conditions of this Agreement, the Government Entity shall do the following as specified in, and in accordance with the design and construction specifications and other requirements set forth in, the Project Plan (the "Government Work"):

i) provide the Trenching and Restoration;
ii) perform the surveying for alignment and grades for ducts and vaults; and
iii) perform any duct and vault installation and other Work which the Parties have specified in the Project Plan is to be performed by the Government Entity.

(b) Other utilities may be permitted by the Government Entity to use the trenches provided by the Government Entity for the installation of their facilities so long as such facilities or the installation thereof do not interfere (as determined pursuant to the Company's electrical standards) with the Underground Distribution System or the installation or maintenance thereof. Any such use of the trenches by other utilities shall be done subject to and in accordance with the joint trench design specifications and installation drawings set forth or otherwise identified in the Project Plan, and the Government Entity shall be responsible for the coordination of the design and installation of the facilities of the other utilities to ensure compliance with such specifications and drawings.

(c) Upon request of the Company, the Government Entity shall provide periodic reports of the progress of the Government Work identifying (i) the Government Work completed to date, (ii) the Government Work yet to be completed, and (iii) an estimate regarding whether the Conversion Project is on target with respect to the Estimated Shared Government Costs and the Work Schedule.

(d) The Government Entity shall be responsible for coordinating all work to be performed in connection with the street improvement program within the Conversion Area.

Provided to Builders Exchange of WA, Inc. For usage Conditions Agreement see www.bxwa.com - Always Verify Scale

(e) Subject to the terms and conditions of this Agreement, the Government Entity shall perform all Government Work in accordance with the Project Plan, the Work Schedule and this Agreement.

4. Work Schedule.

(a) The Government Entity and the Company have agreed upon the Work Schedule as set forth in the Project Plan. Changes to the Work Schedule shall be made only in accordance with Section 6, below.

(b) Promptly following the execution of this Agreement, and upon completion by the Government Entity of any necessary preliminary work, the Government Entity shall hold a pre-construction meeting involving all participants in the Conversion Project to review project design, coordination requirements, work sequencing and related pre-mobilization requirements. Following the pre-construction meeting, the Government Entity shall give the Company written notice to proceed with the Work at least ten (10) business days prior to the commencement date specified in the Work Schedule.

(c) Subject to the terms and conditions of this Agreement, each Party shall perform the Work assigned to it under this Agreement in accordance with the Work Schedule. So long as the Company performs the Company Work in accordance with the Work Schedule, the Company shall not be liable to the Government Entity (or its agents, servants, employees, contractors, subcontractors, or representatives) for any claims, actions, damages, or liability asserted or arising out of delays in the Work Schedule.

5. Location of Facilities.

All facilities of the Company installed within the Conversion Area pursuant to this Agreement shall be located, and all related Operating Rights shall be obtained, in the manner set forth in the applicable provisions of Schedule 74, as specified by the Parties in the Project Plan.

6. Changes.

(a) Either Party may, at any time, by written notice thereof to the other Party, request changes in the Work within the general scope of this Agreement (a "Request for Change"), including, but not limited to: (i) changes in, substitutions for, additions to or deletions of any Work; (ii) changes in the specifications, drawings and other requirements in the Project Plan, (iii) changes in the Work Schedule, and (iv) changes in the location, alignment, dimensions or design of items included in the Work. No Request for Change shall be effective and binding upon the Parties unless signed by an authorized representative of each Party.

(b) If any change included in an approved Request for Change would cause a change in the cost of, or the time required for, the performance of any part of the Work, an equitable adjustment shall be made in the Estimated Shared Company Costs, the Estimated Shared Government Costs, the Estimated Reimbursable Private Conversion Costs (if any), the Estimated Reimbursable Temporary Service Costs (if any), the Estimated Reimbursable Upgrade Costs (if any) and/or the Work Schedule to reflect such change. The Parties shall negotiate in good faith with the objective of agreeing in writing on a mutually acceptable equitable adjustment. If the Parties are unable to agree upon the terms of the equitable adjustment, either Party may submit the matter for resolution pursuant to the dispute resolution provisions in Section 10, below.

(c) The Work Schedule, the Estimated Shared Company Costs, the Estimated Shared Government Costs, the Estimated Reimbursable Private Conversion Costs, the Estimated Reimbursable Temporary Service Costs and/or the Estimated Reimbursable Upgrade Costs shall be further equitably adjusted from time to time to reflect any change in the costs or time required to perform the Work to the extent such change is caused by: (i) any Force Majeure Event under Section 11, below, (ii) the discovery of any condition within the Conversion Area which affects the scope, cost,

Provided to Builders Exchange of WA, Inc. For usage Conditions Agreement see www.bxwa.com - Always Verify Scale

schedule or other aspect of the Work and was not known by or disclosed to the affected Party prior to the date of this Agreement, or (iii) any change or inaccuracy in any assumptions regarding the scope, cost, schedule or other aspect of the Work which are expressly identified by the Parties in the Project Plan. Upon the request of either Party, the Parties will negotiate in good faith with the objective of agreeing in writing on a mutually acceptable equitable adjustment. If, at any time thereafter, the Parties are unable to agree upon the terms of the equitable adjustment, either Party may submit the matter for resolution pursuant to the dispute resolution provisions in Section 10, below.

(d) Notwithstanding any dispute or delay in reaching agreement or arriving at a mutually acceptable equitable adjustment, each Party shall, if requested by the other Party, proceed with the Work in accordance with any approved Request for Change. Any request to proceed hereunder must be accompanied by a written statement setting forth the requesting Party's reasons for rejecting the proposed equitable adjustment of the other Party.

7. Compensation and Payment.

(a) Subject to and in accordance with the terms and conditions of this Agreement (including, without limitation, the payment procedures set forth in this Section 7), payment in connection with the Conversion Project and this Agreement shall be as follows:

i) The Total Shared Costs shall be allocated to the Parties in the following percentages: (A) sixty percent (60%) to the Company, and (B) forty percent (40%) to the Government Entity.
ii) The Government Entity shall pay one hundred percent (100%) of all Reimbursable Private Conversion Costs, if any.
iii) The Government Entity shall pay one hundred percent (100%) of all Reimbursable Upgrade Costs, if any.
iv) The Government Entity shall pay one hundred percent (100%) of all Reimbursable Temporary Service Costs, if any.
v) The Government Entity shall pay one hundred percent (100%) of the costs it incurs to perform that portion of the Government Work specified in Section 3(a)(i) and (ii) (i.e., Trenching and Restoration and surveying).
vi) The Company shall pay one hundred percent (100%) of the costs it incurs to design, provide and construct any Company-Initiated Upgrade.
vii) The Company shall pay one hundred percent (100%) of the costs it incurs to obtain Operating Rights outside the Public Thoroughfare.

(b) Based on the allocation of responsibilities set forth in Section 7(a), above, the Parties shall determine the net amount payable by the Government Entity or the Company, as applicable, to the other Party under this Agreement (the "Net Amount"). The Net Amount shall be determined by using the amount of the Total Shared Costs allocated to the Government Entity under Section 7(a)(i), and adjusting such amount as follows:

i) Subtracting (as a credit to the Government Entity) the amount of the Shared Government Costs.
ii) Adding (as a credit to the Company) the amount of all Reimbursable Private Conversion Costs, Reimbursable Upgrade Costs and Reimbursable Temporary Service Costs.
iii) Subtracting (as a credit to the Government Entity) any payments previously made to the Company by the Government Entity under the Design Agreement which, under the terms of the Design Agreement, are to be credited to the Government Entity under this Agreement.

The Net Amount, as so calculated, (A) will be an amount payable to the Company if it is a positive number, and (B) shall be an amount payable to the Government Entity if it is a negative number.

Provided to Builders Exchange of WA, Inc. For usage Conditions Agreement see www.bxwa.com - Always Verify Scale

(c) Within sixty (60) business days of completion of the Conversion Project, the Government Entity shall provide the Company with an itemization of the Shared Government Costs (the "Government Itemization"), together with such documentation and information as the Company may reasonably request to verify the Government Itemization. The Government Itemization shall, at a minimum, break down the Shared Government Costs by the following categories, as applicable: (i) property and related costs incurred and/or paid by the Government Entity, including any costs of obtaining Operating Rights, and (ii) construction costs incurred and/or paid by the Government Entity, including and listing separately inspection, labor, materials and equipment, overhead and all costs charged by any agent, contractor or subcontractor of the Government Entity.

(d) Within thirty (30) business days after the Company's receipt of the Government Itemization and requested documentation and information, the Company shall provide the Government Entity a written statement (the "Company Statement") showing (i) an itemization of the Shared Company Costs, (ii) the Parties' relative share of the Total Shared Costs based on the Company's itemization of the Shared Company Costs and the Government Entity's itemization of the Shared Government Costs set forth in the Government Itemization, (iii) any Reimbursable Private Conversion Costs, (iv) any Reimbursable Upgrade Costs, (v) any Reimbursable Temporary Service Costs, (vi) any credits to the Government Entity for payments previously made to the Company by the Government Entity under the Design Agreement which, under the terms of the Design Agreement, are to be credited to the Government Entity under this Agreement, and (vii) the Net Amount, as determined in accordance with Section 7(b), above, together with such documentation and information as the Government Entity may reasonably request to verify the Company Statement. The itemization of the Shared Company Costs included in the Company Statement shall, at a minimum, break down the Shared Company Costs by the following categories, as applicable: (i) design and engineering costs, and (ii) construction costs, including and listing separately inspection, labor, materials and equipment, overhead and all costs charged by any agent, contractor or subcontractor of the Company.

(e) Within thirty (30) business days after the Government Entity's receipt of the Company Statement and requested documentation and information, the Net Amount shall be paid by the owing Party to the other Party, as specified in the Company Statement.

8. Indemnification.

(a) The Government Entity releases and shall defend, indemnify and hold the Company harmless from all claims, losses, harm, liabilities, damages, costs and expenses (including, but not limited to, reasonable attorneys' fees) caused by or arising out of any negligent act or omission or willful misconduct of the Government Entity in its performance under this Agreement. During the performance of such activities the Government Entity's employees or contractors shall at all times remain employees or contractors, respectively, of the Government Entity.

(b) The Company releases and shall defend, indemnify and hold the Government Entity harmless from all claims, losses, harm, liabilities, damages, costs and expenses (including, but not limited to, reasonable attorneys' fees) caused by or arising out of any negligent act or omission or willful misconduct of the Company in its performance under this Agreement. During the performance of such activities the Company's employees or contractors shall at all times remain employees or contractors, respectively, of the Company.

(c) Solely for purposes of enforcing the indemnification obligations of a Party under this Section 8, each Party expressly waives its immunity under Title 51 of the Revised Code of Washington, the Industrial Insurance Act, and agrees that the obligation to indemnify, defend and hold harmless provided for in this Section 8 extends to any such claim brought against the indemnified Party by or on behalf of any employee of the indemnifying Party. The foregoing waiver shall not in any way preclude the indemnifying Party from raising such immunity as a defense against any claim brought against the indemnifying Party by any of its employees.

Provided to Builders Exchange of WA, Inc. For usage Conditions Agreement see www.bxwa.com - Always Verify Scale

9. Conversion of Service to Customers within Conversion Area.

(a) Upon commencement of the Work, the Government Entity shall notify all persons and entities within the Conversion Area that service lines to such customers must be converted from overhead to underground service within the applicable statutory period following written notice from the Government Entity that service from underground facilities are available in accordance with RCW 35.96.050. Upon the request of any customer, other than a single family residential customer, within the Conversion Area, the Company shall remove the overhead system and connect such persons' and entities' Underground Service Lines to the Underground Distribution System.

(b) The Parties acknowledge that single family residences within the Conversion Area must (i) provide a service trench and conduit, in accordance with the Company's specifications, from the underground meter base to the point of service provided during the conversion, and (ii) pay for the secondary service conductors as defined in Schedule 85 of the Company's Electric Tariff G. The Government Entity shall exercise its authority to order disconnection and removal of overhead facilities with respect to owners failing to convert service lines from overhead to underground within the timelines provided in RCW 35.96.050.

10. Dispute Resolution.

(a) Any dispute, disagreement or claim arising out of or concerning this Agreement must first be presented to and considered by the Parties. A Party who wishes dispute resolution shall notify the other Party in writing as to the nature of the dispute. Each Party shall appoint a representative who shall be responsible for representing the Party's interests. The representatives shall exercise good faith efforts to resolve the dispute. Any dispute that is not resolved within ten (10) business days of the date the disagreement was first raised by written notice shall be referred by the Parties' representatives in writing to the senior management of the Parties for resolution. In the event the senior management are unable to resolve the dispute within twenty (20) business days (or such other period as the Parties may agree upon), each Party may pursue resolution of the dispute through other legal means consistent with the terms of this Agreement. All negotiations pursuant to these procedures for the resolution of disputes shall be confidential and shall be treated as compromise and settlement negotiations for purposes of the state and federal rules of evidence.

(b) Any claim or dispute arising hereunder which relates to any Request for Change or any equitable adjustment under Section 6, above, or the compensation payable by or to either Party under Section 7, above, and which is not resolved by senior management within the time permitted under Section 10(a), above, shall be resolved by arbitration in Seattle, Washington, under the Construction Industry Arbitration Rules of the American Arbitration Association then in effect. The decision(s) of the arbitrator(s) shall be final, conclusive and binding upon the Parties. All other disputes shall be resolved by litigation in any court or governmental agency, as applicable, having jurisdiction over the Parties and the dispute.

(c) In connection with any arbitration under this Section 10, costs of the arbitrator(s), hearing rooms and other common costs shall be divided equally among the Parties. Each Party shall bear the cost and expense of preparing and presenting its own case (including, but not limited to, its own attorneys' fees); provided, that, in any arbitration, the arbitrator(s) may require, as part of his or her decision, reimbursement of all or a portion of the prevailing Party's costs and expenses (including, but not limited to, reasonable attorneys' fees) by the other Party.

(d) Unless otherwise agreed by the Parties in writing, the Parties shall continue to perform their respective obligations under this Agreement during the pendency of any dispute.

Provided to Builders Exchange of WA, Inc. For usage Conditions Agreement see www.bxwa.com - Always Verify Scale

11. Uncontrollable Forces.

In the event that either Party is prevented or delayed in the performance of any of its obligations under this Agreement by reason beyond its reasonable control (a "Force Majeure Event"), then that Party's performance shall be excused during the Force Majeure Event. Force Majeure Events shall include, without limitation, war; civil disturbance; flood, earthquake or other Act of God; storm, earthquake or other condition which necessitates the mobilization of the personnel of a Party or its contractors to restore utility service to customers; laws, regulations, rules or orders of any governmental agency; sabotage; strikes or similar labor disputes involving personnel of a Party, its contractors or a third party; or any failure or delay in the performance by the other Party, or a third party who is not an employee, agent or contractor of the Party claiming a Force Majeure Event, in connection with the Work or this Agreement. Upon removal or termination of the Force Majeure Event, the Party claiming a Force Majeure Event shall promptly perform the affected obligations in an orderly and expedited manner under this Agreement or procure a substitute for such obligation. The Parties shall use all commercially reasonable efforts to eliminate or minimize any delay caused by a Force Majeure Event.

12. Insurance.

(a) PSE shall, and shall require each of its contractors to, secure and maintain in force throughout the duration of the Conversion Project (or, if sooner, until termination of this Agreement) comprehensive general liability insurances, with a minimum coverage of $1,000,000 per occurrence and $1,000,000 aggregate for personal injury; and $1,000,000 per occurrence/ aggregate for property damages, and professional liability insurance in the amount of $1,000,000.

(b) The Government Entity shall ensure that each of its contractors performing any Government Work secures and maintains in force throughout the duration of the Conversion Project (or, if sooner, until termination of this Agreement) insurance policies having the same coverage, amounts and limits as specified Section 12(a), above.

(c) In lieu of the insurance requirements set forth in Section 12(a), above, the Company may self-insure against such risks in such amounts as are consistent with good utility practice. Upon the Government Entity's request, the Company shall provide the Government Entity with reasonable written evidence that the Company is maintaining such self-insurance.

13. Other.

(a) Agreement Subject To Tariff. This Agreement is subject to the General Rules and Provisions set forth in Tariff Schedule 80 of the Company's electrical Tariff G and to Schedule 74 of such Tariff as approved by the Washington Utilities and Transportation Commission and in effect as of the date of this Agreement.

(b) Termination. The Government Entity reserves the right to terminate the Conversion Project and this Agreement upon written notice to the Company. In the event that the Government Entity terminates the Conversion Project and this Agreement, the Government Entity shall reimburse the Company for all costs reasonably incurred by the Company in connection with the Work performed prior to the effective date of termination. In such event, the costs reimbursable to the Company (i) shall not be reduced by any Shared Government Costs or other costs incurred by the Government Entity, and (ii) shall be paid within thirty (30) days after the receipt of the Company's invoice therefor. Sections 1, 5, 7, 8, 9, 10, 11 and 13 shall survive any termination of the Conversion Project and/or this Agreement.

(c) Facilities Greater Than 15,000 Volts. Nothing in this Agreement shall in any way affect the rights or obligations of the Company under any previous agreements pertaining to the existing or future facilities of greater than 15,000 Volts within the Conversion Area.

Provided to Builders Exchange of WA, Inc. For usage Conditions Agreement see www.bxwa.com - Always Verify Scale

(d) Compliance With Law. The Parties shall, in performing the Work under this Agreement, comply with all applicable federal, state, and local laws, ordinances, and regulations.

(e) No Discrimination. The Company, with regard to the Work performed by the Company under this Agreement, shall comply with all applicable laws relating to discrimination on the basis race, color, national origin, religion, creed, age, sex, or the presence of any physical or sensory handicap in the selection and retention of employees or procurement of materials or supplies.

(f) Independent Contractor. The Company and the Government Entity agree that the Company is an independent contractor with respect to the Work and this Agreement. The Company is acting to preserve and protect its facilities and is not acting for the Government Entity in performing the Work. Nothing in this Agreement shall be considered to create the relationship of employer and employee between the Parties. Neither the Company nor any employee of the Company shall be entitled to any benefits accorded employees of the Government Entity by virtue of the Work or this Agreement. The Government Entity shall not be responsible for withholding or otherwise deducting federal income tax or social security or contributing to the State Industrial Insurance Program, or otherwise assuming the duties of an employer with respect to the Company, or any employee of the Company.

(g) Nonwaiver of Rights or Remedies. No failure or delay of either Party to insist upon or enforce strict performance by the other Party of any provision of this Agreement or to exercise any other right under this Agreement, and no course of dealing or performance with respect thereto, shall, except to the extent provided in this Agreement, be construed as a waiver or, or choice of, or relinquishment of any right under any provision of this Agreement or any right at law or equity not otherwise provided for herein. The express waiver by either Party of any right or remedy under this Agreement or at law or equity in a particular instance or circumstance shall not constitute a waiver thereof in any other instance or circumstance.

(h) No Third Party Beneficiaries. There are no third-party beneficiaries of this Agreement. Nothing contained in this Agreement is intended to confer any right or interest on anyone other than the Parties, their respective successors, assigns and legal representatives.

(i) Governmental Authority. This Agreement is subject to the rules, regulations, orders and other requirements, now or hereafter in effect, of all governmental regulatory authorities and courts having jurisdiction over this Agreement, the Parties or either of them. All laws, ordinances, rules, regulations, orders and other requirements, now or hereafter in effect, of governmental regulatory authorities and courts that are required to be incorporated into agreements of this character are by this reference incorporated in this Agreement.

(j) No Partnership. This Agreement shall not be interpreted or construed to create an association, joint venture or partnership between the Parties or to impose any partnership obligations or liability upon either Party. Further, neither Party shall have any right, power or authority to enter into any agreement or undertaking for or on behalf of, to act as or be an agent or representative of, or to otherwise bind the other Party.

(k) Severability. In the event that any provision of this Agreement or the application of any such provision shall be held invalid as to either Party or any circumstance by any court having jurisdiction, such provision shall remain in force and effect to the maximum extent provided by law, and all other provisions of this Agreement and their application shall not be affected thereby but shall remain in force and effect unless a court or arbitrator holds they are not severable from the invalid provisions.

Provided to Builders Exchange of WA, Inc. For usage Conditions Agreement see www.bxwa.com - Always Verify Scale

(l) Notice. Any notice under this Agreement shall be in writing and shall be faxed (with a copy followed by mail or hand delivery), delivered in person, or mailed, properly addressed and stamped with the required postage, to the intended recipient as follows:

If to the Government Entity:	City of Kenmore 18120 68th Ave NE PO Box 82607, Kenmore, WA 98028 Attn: Kris Overleese, City Engineer or Designee Fax: 425-481-3236
If to the Company:	Puget Sound Energy, Inc. _____ _____ Attn: Raelynn Asah Fax: 425-424-6446

Any Party may change its address specified in this Section 13(l) by giving the other Party notice of such change in accordance with this Section 13(l).

(m) Applicable Law. This Agreement shall in all respects be interpreted, construed and enforced in accordance with the laws of the State of Washington (without reference to rules governing conflict of laws), except to the extent such laws may be preempted by the laws of the United States of America.

(n) Entire Agreement. This Agreement constitutes the entire agreement of the Parties with respect to the subject matter hereof and all other agreements and understandings of the Parties, whether written or oral, with respect to the subject matter of this Agreement are hereby superseded in their entireties; provided, however, that except as expressly set forth in this Agreement, nothing herein is intended to or shall alter, amend or supersede the Design Agreement and the same shall remain in full force and effect in accordance with its terms.

(o) Successors and Assigns. This Agreement shall be binding upon and inure to the benefit of the respective successors, assigns, purchasers, and transferees of the Parties, including but not limited to, any entity to which the rights or obligations of a Party are assigned, delegated, or transferred in any corporate reorganization, change of organization, or purchase or transfer of assets by or to another corporation, partnership, association, or other business organization or division thereof.

Government Entity:	Company:
_____	PUGET SOUND ENERGY, INC.
BY_____	BY_____
ITS_____	ITS_____
Date Signed_____	Date Signed_____

Approved as to form:

_____

Provided to Builders Exchange of WA, Inc. For usage Conditions Agreement see www.bxwa.com - Always Verify Scale

PUGET SOUND ENERGY
The Energy To Do Great Things

Exhibit "A" Project Plan
Schedule 74 Underground Conversion

City of Kenmore – NE 181st St.
PSE Project Number: 101093868
1/4/16

Pursuant to Puget Sound Energy ("PSE") Rate Schedule 74 and as described in this Project Plan, PSE will convert its existing overhead electrical distribution system of 15,000 volts or less to an equivalent Underground Distribution System. This Project Plan describes the scope of construction work (the "Construction Work") to be performed by PSE and the City of Kenmore (the "City") for the conversion of certain PSE electrical distribution system facilities as described herein (the "Conversion Project"). Construction of this Conversion Project is contingent upon and shall commence only after both written acceptance of this Project Plan and written execution of a Schedule 74 Construction Agreement by the City and PSE.

This Project Plan includes and consists of:

- Description of the Construction Work to be performed
- Construction Drawings, Standards, Specifications and Requirements for the Construction Work (attached)
- Operating Rights to be obtained for the Conversion Project (attached)
- Construction Work Schedule
- Construction Costs Estimate Summary (attached)

Revisions to this Project Plan must be mutually approved by the City and PSE.

Construction Work

This Conversion Project will replace PSE's existing overhead electrical distribution system with an Underground Distribution System within the following area (the "Conversion Area"): The City of Kenmore (the City) requests that Puget Sound Energy (PSE) convert its existing overhead electric distribution system of 15,000 volts or less to a comparable Underground Distribution System within the following Conversion Area: Along NE 181st St., Starting at approximately 400' East of the intersection of 68th Ave NE, east to approximately 400' west of the intersection of 73rd Ave NE along NE 181st St. over a distance of approximately 700 feet. The Conversion Project is approximately 700' feet in length, including laterals and road crossings.

Provided to Builders Exchange of WA, Inc. For usage Conditions Agreement see www.bxwa.com - Always Verify Scale

The Conversion Project includes modification or replacement of all existing services lines within the Conversion Area to connect to the Underground Distribution System and removal of PSE's existing overhead electric distribution facilities (including PSE distribution poles and pole mounted street lights) from the Conversion Area.

There are no Company Initiated Upgrades, Government Entity Requested Upgrades or Temporary Service elements included in the Conversion Project Scope of Work.

PSE initiated upgrades included in this project consist of: None.

City requested upgrades included in this project consist of: Research and compliance with Buy America Act provisions administered by the Federal Highways Administration (FHWA) and/or the Federal Transit Administration (FTA).

Temporary Service included in this project consists of: None.

The following portions of PSE's existing facilities to be converted are located outside of Public Thoroughfare: See site plan.

In conjunction with this Conversion Project, PSE will remove its existing street lighting system from the Conversion Area. Provision of a replacement street lighting system within the Conversion Area is not included in this Project Plan. Replacement street lighting service can be provided by separate arrangement in accordance with applicable PSE Tariff Schedules.

Responsibilities of Parties

City Responsibilities

a) At least ten (10) business days prior to the scheduled commencement of Construction Work, hold a pre-construction meeting involving all participants in the Conversion Project to review project design, coordination requirements, work sequencing and related premobilization requirements.

b) At least ten (10) business days prior to the scheduled commencement of Construction Work, give PSE written notice to proceed with the Construction Work to allow for delivery of PSE materials to the job site and scheduling of PSE's on-site Inspector.

c) Provide written notice to customers within the Conversion Area in advance of Conversion Project Construction Work start. The notice will include contact information for both the City and PSE, the expected Conversion Project schedule, anticipation of service interruptions and work required to be performed by customers.

d) Coordinate other utility conversion, removal and relocation from PSE's poles.

e) Provide all surveying for equipment placement, locations, and establish all grade elevations for the Underground Distribution System within the Conversion Area.

f) Provide all necessary excavation, bedding, backfill, off-site disposal, site restoration and coordination for installation of the Underground Distribution System. This includes trenching, backfill, and restoration for cut-over and transfer of existing underground system and service lines from the existing overhead distribution system to the new Underground Distribution System.

Provided to Builders Exchange of WA, Inc. For usage Conditions Agreement see www.bxwa.com - Always Verify Scale

g) Coordinate private property trenching, excavation and restoration activity with private property owners affected by this Conversion Project.

h) Provide flagging and traffic control as required for all work performed by the City.

i) Install and proof all ducts and vaults for the Underground Distribution System (excluding work in ducts or vaults containing energized cables or equipment – see PSE Responsibilities) in accordance with PSE standards and specifications using ducts and vaults provided by PSE. "Proofing" as used herein is defined as verification using a mandrel that the duct and vault system is free and clear of damage, installed to the proper grade and at the proper location and contains a pulling line.

j) Provide at least five (5) business days' notice for scheduled delivery of PSE vaults by PSE's vault supplier.

k) Provide secure staging and storage area(s) for duct and vault materials provided by PSE. The City shall be responsible for the security and condition of these materials until they are installed and accepted by PSE or returned to PSE's custody.

l) Provide labor and equipment for the off-loading of PSE duct and vault materials delivered to the job site.

m) Promptly following notice from PSE that the Underground Distribution System has been energized, provide notice to customers within the Conversion Area informing them of their obligation and responsibility to convert their overhead service lines to underground service lines as provided by state law or to modify existing underground service lines for connection to the Underground Distribution System. Affected service lines are listed in the Service Lines section of this Project Plan.

n) Facilitate weekly (or as otherwise agreed by the City and PSE) construction coordination meetings to include all relevant parties participating in the conversion including PSE and its contractor(s), the City and its contractor(s), and other utilities.

o) Provide any necessary operating rights for the installation of PSE's facilities in accordance with PSE's Schedule 74 Section 3 and as mutually agreed by the PSE and the City. Operating rights are further addressed in the Operating Rights section of this Project Plan.

p) Modify, reroute or replace service lines to City owned facilities to connect to the Underground Distribution System.

q) Following notification from PSE that Construction Work is complete, provide to PSE any Shared Government Costs as provided for in the Construction Agreement.

Puget Sound Energy Responsibilities

a) Provide all duct and vault materials, cables, electrical equipment and components necessary for installation of the Underground Distribution System including certifications of materials origins (COMOs) as may be required for products that must meet applicable provisions of the Buy America Act as administered by the Federal Highways Administration (FHWA) and/or the Federal Transit Administration (FTA).

Provided to Builders Exchange of WA, Inc. For usage Conditions Agreement see www.bxwa.com - Always Verify Scale

b) Following notice from the City, deliver or cause to be delivered all duct and vault materials to the designated staging/storage area(s). Acknowledge delivered quantities and condition of duct and vault materials by signing shipping manifests.

c) Following notice from the City, provide inspection services needed for overseeing the proper installation of ducts and vaults by the City.

d) Accept delivery of the completed duct and vault system once the new system has been proofed (as described above) by the City. PSE will provide a mandrel to the City to be used in proofing of the duct and vault system.

e) Provide PSE electrical workers to complete duct installation and proofing when such work is performed at or in any energized vault containing energized cables or equipment.

f) Install (except for ducts and vaults installed by the City) and energize the Underground Distribution System. Provide written notice to the City when the Underground Distribution System is energized.

g) Perform cut-over and transfer of existing Underground Distribution System and existing underground service lines from the overhead distribution system to the new Underground Distribution System where applicable (see City Responsibility item "f" concerning trenching responsibility). PSE will notify the City for excavation and the affected customers at least two (2) business days prior to installation, transfer, and connection of underground service lines. Affected service lines are listed in the Service Lines section of this Project Plan.

h) Install and connect replacement underground service lines to single family residences and connect modified and replacement non-residential underground service lines provided by customers within the Conversion Area pursuant to PSE Tariff Schedule 85. Affected service lines are listed in the Service Lines section of this Project Plan.

i) Remove the existing overhead electric distribution system including, conductors, equipment, down guys, anchors and poles after all service lines to customers within the Conversion Area are connected to the Underground Distribution System and all other utilities have been removed from PSE's poles. Holes left following removal of poles will be filled with crushed rock and compacted in accordance with applicable City standards or specifications.

j) Provide flagging and traffic control as required for all work performed by PSE (except as may otherwise be reasonably provided by the City during installation of ducts and vaults in conjunction with City performed trenching, excavation, back-fill and restoration).

k) Attend weekly (or as otherwise agreed by the City and PSE) construction coordination meetings facilitated by the City and its contractor during periods of Conversion Project construction.

Operating Rights

The Underground Distribution System will be located within Public Thoroughfare except as described in the Operating Rights Attachment. The Construction Work will not be released by PSE for construction until i) all operating rights necessary for the installation of PSE's facilities have been obtained and have been verified by PSE, or ii) the City otherwise signs an agreement releasing PSE from any and all financial obligations associated with the location or relocation of

Provided to Builders Exchange of WA, Inc. For usage Conditions Agreement see www.bxwa.com - Always Verify Scale

PSE facilities resulting from commencement of construction prior to acquisition of all identified necessary operating rights.

Construction Work Schedule

The Construction Work will be performed in accordance with the following Work Schedule, unless this schedule is revised by mutual agreement of the City and PSE or circumstances beyond the reasonable control of the City and/or PSE preclude such performance.

Installation of ducts and vaults: April-May 2016

Installation and energization of the Underground Distribution System: June-July 2016

Removal of overhead facilities: June 2016

Installation and removal of Temporary Service: NA

Work Schedule Restrictions: City permitted.

Construction Cost Estimate

The estimated costs to perform the Construction Work and the allocation of costs between the parties are presented in the attached Construction Costs Estimate Summary. These estimated costs are valid for ninety (90) days from the date shown on the attached Construction Costs Estimate Summary. If this Project Plan and a Schedule 74 Construction Agreement are not fully executed within ninety (90) days from this date, the estimated costs shall be subject to revision.

The scope of work provided for in the previously executed Design Agreement has been completed with written acceptance of this Project Plan by the City and PSE. The Construction Cost Estimate reflects and provides for Construction Work costs commencing with PSE attendance at the required pre-construction meeting and receipt of the City's written notice to proceed with Construction Work. Work performed and/or costs incurred by PSE in response to City request following acceptance of the Project Plan and prior to the pre-construction meeting are not included in the Construction Cost Estimate, and shall be subject to addition to the Construction Cost Estimate by revision as described below.

Estimated Inspection and Service Provider Outside Services costs are based on 2016 contract rates.

Changes in Construction Work scope, performance and/or schedule can result in actual Construction Costs that differ from estimated costs shown in the Construction Cost Estimate Summary. In the event performance of the Construction Work cannot or does not proceed substantially as provided in this Project Plan, such changes shall promptly be brought to the attention of PSE and the City when anticipated or known and shall be documented in a revision to the Construction Cost Estimate (a "Cost Estimate Revision") mutually agreed and executed by the City and PSE.

Provided to Builders Exchange of WA, Inc. For usage Conditions Agreement see www.bxwa.com - Always Verify Scale

Project Assumptions

The project design, construction plans and cost estimates are based on and reflect the following assumptions. Construction conditions that are not consistent with these assumptions may result in a request for change or an equitable adjustment to project compensation under Section 6 of the Construction Agreement and addressed by a Cost Estimate Revision.

Cost Assumptions

1. The Construction Work will be performed in accordance with the Construction Drawings and Construction Work Schedule.
2. PSE's Project Manager will accept or reject (with written justification) the duct and vault installation work performed by the City within five (5) business days notice of completion from the City. In the event PSE rejects any of the ducts or vaults (with reasonable written justification), the City will perform the necessary remedial work. The City will then re-notify PSE and PSE shall have five (5) business days to accept or reject the remedial work.
3. All PSE cables can be pulled through the ducts and vaults system, including existing ducts and vaults if applicable, to be used for the Conversion Project utilizing normal cable pulling equipment and methods.
4. A City Street Use permit is the only permit necessary for PSE to perform its work for this Conversion Project and will be issued within two (2) weeks of PSE submitting a complete permit application (including any supporting documentation reasonably required by the City). There will be no charge for the permit or inspection fees.
5. The estimated daily productivity rate for PSE duct and vault installation is based on the City's contractor opening a minimum of 50 feet of trench per working day. The daily productivity rate is used to estimate the number of days a PSE Inspector will be required during installation of ducts & vaults. The Inspector will be scheduled in full day increments and in one continuous effort. Changes to a continuous schedule require a minimum of five days advance notice and must be mutually agreed between the City and PSE.
6. Attendance by the PSE Project Manager at scheduled weekly construction coordination meetings is included and reflected in the Construction Cost Estimate during periods when the PSE ducts and vaults are actively being installed and when the PSE line crew is performing installation, energization, cut-over and removal work. Attendance at additional meetings that may be requested / required during other periods will be addressed by a Cost Estimate Revision.
7. Traffic control provided by PSE assumes the use of two flaggers, basic signage and simple channelization. Additional traffic control measures are not included and if requested / required will be addressed by a Cost Estimate Revision.
8. Work to be performed by PSE does not include installation and/or removal of Temporary Service facilities at the request of others during construction.
9. Cut-over and transfer work will be completed during regular working hours except as described in Schedule Assumption #3 below. Changes in the performance of this work will be addressed by a Cost Estimate Revision.
10. New guy anchors shall be installed prior to installation of new ducts in the same area.

Provided to Builders Exchange of WA, Inc. For usage Conditions Agreement see www.bxwa.com - Always Verify Scale

11. When Fluidized Thermal Backfill (FTB) is used, associated cost will be allocated 100% to PSE when required for a Company Initiated Upgrade and otherwise 100% to the City.

12. Installation of protective bollards may be necessary at some locations and may not be included in the project design. In the event unplanned bollards are required, associated costs will be a Shared Cost and addressed by a Cost Estimate Revision.

Schedule

1. There will be a total of two (2) PSE crew mobilizations as follows: i) one mobilization of an underground line crew for installation of underground conductors and equipment; and ii) one mobilization of an overhead line crew for removal of the existing overhead facilities. Once mobilized PSE crews will have continuous productive work until all PSE Construction Work is complete.

2. All PSE Construction Work will be performed during regular working hours from 7:00 am – 5:00 pm excluding holidays. In the event that lane closures are necessary for performance of work, PSE shall be limited to working between the hours of 9:00 am – 3:00 pm. PSE and the City will mutually agree to weekly work schedules for the Construction Work. PSE shall be allowed to perform PSE work as scheduled without changes or interruptions caused by other construction activities.

3. PSE customers within the Conversion Area will experience interruption of electric service during performance of the Construction Work when cutting over and transferring system and customer loads from the overhead distribution system to the Underground Distribution System. Cut-over and transfer work will be performed during the regular working hours specified in Schedule Assumption #2 above except as otherwise provided below. PSE will notify customers at least two (2) business days in advance of scheduled service interruptions.

Additional Considerations

Service Lines

Service lines within the Conversion Area must be modified or replaced to provide underground service from the Underground Distribution System as described in as listed in the Construction Drawings. Performance of the work and associated costs shall be governed by PSE Tariff Schedule 85.

New Service

Connection of new or increased load for City facilities (such as new traffic signals) under terms of PSE Tariff Schedule 85 will be addressed on a separate work order and work sketch. Additional costs may apply and will be quoted separately.

Provided to Builders Exchange of WA, Inc. For usage Conditions Agreement see www.bxwa.com - Always Verify Scale

PSE Design & Construction Standards

This Conversion Project has been designed and will be constructed in accordance with PSE design and construction standards in effect as of the date of this Project Plan. PSE standards applicable to Construction Work to be performed by the City have been provided to the City in PSE's "Electric Distribution Trench/Duct/Vault Construction Standards, 2013". All relevant PSE standard described above are attached to this Project Plan by this reference.

Temporary Support (Holding) of PSE Poles

Whenever any pole(s) are required to be temporarily supported (held) due to excavation in proximity to such poles, the City will coordinate with PSE to provide such support. The need to temporarily support such poles shall be determined by PSE, and if required, such support shall be provided by PSE. As used herein, "temporary support" means supporting one or more poles for a continuous working period of ten hours or less.

Acceptance of Project Plan

The City and PSE mutually agree to and accept this Project Plan as of the date indicated below:

For the City:	For PSE:
By: _____	By: _____
Its: _____	Its: _____
Date: _____	Date: _____

Provided to Builders Exchange of WA, Inc. For usage Conditions Agreement see www.bxwa.com - Always Verify Scale

PUGET SOUND ENERGY

Date:
Project Title: KENMORE - NE 181ST ST. S74
Project Description: OH to UG conversion along NE 181st St.

Rate Schedule: 74
Project Manager / Phone #: JOSH GRENNER 425-457-4542
Project Engineer / Phone #: GUY RIDER 425-449-9596
Municipal Liaison Mgr / Phone #: RAELYNN ASAH 425-424-6446
Project #: 101093868
Revision #:
Revision Date:

Project Costs Statement Summary [1]

	Shared Costs [2]	100% Government Entity Reimbursable Costs					100% PSE Costs	Project Costs Totals [3]
		Private Conversion	Gov Req Upgrade	Temporary Services	Prior Conv/Reloc Within 5 Years	Total 100% GE Reimbursable Costs		
Design Costs [4]	$ -	$ -	$ -	$ -	$ -	$ -	$ -	$ -
Construction Costs [4]	$ 120,055	$ -	$ -	$ -	$ -	$ -	$ -	$ 120,055
Project Costs Totals [3]	$ 120,055	$ -	$ -	$ -	$ -	$ -	$ -	$ 120,055

Allocation of Total Project Costs at Completion of Conversion Project

Company		$ 72,033				$ -	$ 72,033
Government Entity	**A)**	$ 48,022		**ii)**	$ -		$ 48,022

Notes:
[1] Prepared to represent allocation and reconciliation of project costs consistent with Schedule 74 Design & Construction Agreements
[2] Shared Costs are allocated 40% to the Government Entity and 60% to the Company
[3] Total Costs excludes Government Entity costs of trenching, restoration, and surveying
[4] Costs include any approved change orders

Government Entity Payments and Incurred Costs		
Duct & Vault Installation, Operation Rights	**i)**	
Design Agreement Payment(s)	**iii)**	

Net Amount Payable Calculation [Construction Agreement Section 7(b)]		
Total Shared Costs Allocated to Government Entity	**A)**	$ 48,022
Adjustments		
i) Less Shared Government Costs (incurred by GE)		$ -
ii) Plus Total 100% GE Reimbursable Costs		$ -
iii) Less Design Agreement payment(s) previsouly made by GE		$ -
Total Adjustments		$ -
Net Amount Payable to Company by Government Entity		$ 48,022

Provided to Builders Exchange of WA, Inc. For usage Conditions Agreement see www.bxwa.com - Always Verify Scale

16-C1516

AGREEMENT
BETWEEN COMCAST AND THE CITY OF KENMORE
NE 181st STREET SIDEWALK - SOUTH (68TH AVE NE – 73RD AVE NE)
CIP PROJECT T-27

THIS AGREEMENT is made and entered into this _____ day of _____, 2016, by and between City of Kenmore, a political subdivision of the State of Washington ("City"), and Comcast; and

WHEREAS, the City has concluded that the NE 181st Street Sidewalk - South project, from 400 feet east of 68th Ave NE to 400 feet west of 73rd Ave NE for a distance of approximately 700 feet, CIP Project T-27 is necessary in order to improve pedestrian safety ("Project"); and

WHEREAS, the Project is supported by the City Council and endorsed by the Washington State Department of Transportation (WSDOT) and King County Housing and Community Development; and

WHEREAS, the City is the lead agency for the construction of the Project. WSDOT will provide certification acceptance authority during the Design and King County will provide certification acceptance during the Construction Phase of the Project; and

WHEREAS, the Project requires trenching within the right of way for the placement of facilities of utility service providers, including Comcast and others (“Joint Trenches”); and

WHEREAS, Comcast desires to secure the services of the City to install an underground conduit and vault system, and other associated facilities and Comcast desires to cooperate in the planning, engineering, design and other work for such installation, when and where such Joint Trenches will be of mutual advantage in meeting the requirements of Comcast and the City for underground facilities service; and

WHEREAS, Comcast finds that it is in the best interest of its customers to work jointly with the City on the Project and to include necessary items of work in the City's construction of the Project; and

WHEREAS, the City finds that it is in the best interest of the public for the City to work jointly with Comcast to accomplish the Project;

NOW, THEREFORE, the foregoing recitals are true and correct and are incorporated in this Agreement and it is further mutually agreed as follows:

Provided to Builders Exchange of WA, Inc. For usage Conditions Agreement see www.bxwa.com - Always Verify Scale

I. PURPOSE

The purpose of this Agreement is to provide for the joint bidding and contracting of Comcast's utility installation project with the City's Project. This Agreement will facilitate installation of Comcast's facilities in Joint Trenches, which will be located within City rights-of-way or private property in the Project area. The parties also intend this Agreement to set forth the terms and conditions of the City's engineering, inspection, and contract administration services on behalf of Comcast.

II. DURATION OF AGREEMENT

This Agreement shall become effective immediately upon execution of the parties and shall remain in effect until there has been acceptance of the work by Comcast, unless terminated sooner, as provided herein. It is anticipated that the Project will be completed by December 31, 2016.

III. INCORPORATED CONTRACT DOCUMENTS

The Contract Documents for the Project are hereby incorporated into this Agreement, including the 2014 WSDOT Standard Specifications (hereinafter the "Standard Specifications"). The Contract Documents show in detail the location of the Joint Trenches and vaults. Comcast has approved the designs for the Joint Trench and vaults as shown in the Contract Documents.

Should any terms conflict between this Agreement and the Contract Documents, than the terms of the Contract Documents shall prevail.

IV. CITY'S WORK

A. The City will undertake the Project as described in the Contract Documents. The City reserves the right to determine not to undertake the Project or to discontinue the Project at any time. In the event that the City determines not to undertake the Project, it shall provide written notice to Comcast the effect of which shall be to terminate this Agreement. In the event that the City determines to discontinue the Project, the rights and responsibilities of each party upon such termination shall be as provided in Section VIII below.

B. The City will be the lead agency for the Project and will be responsible for compliance with King County Housing and Community Development requirements. The City Engineer or designee shall act as the administrator and the City's representative for this cooperative undertaking.

C. The City will include Comcast's scope of work, plans and specifications for the installation of Comcast's underground conduit and vault system, and other

Provided to Builders Exchange of WA, Inc. For usage Conditions Agreement see www.bxwa.com - Always Verify Scale

associated facilities, hereinafter referred to as the "**Telecommunications System**" in the City's Project.

D. The City shall be responsible for the competitive bidding, award, administration and construction of the Project, and may enter into a contract with the successful bidder.

E. As required by State law, award of the bid shall be to the lowest responsible bidder (referred to herein as the "Contractor") submitting a responsive bid for the entire Project, which shall include the Telecommunications System work.

F. The City shall administer the contract and make payments to the Contractor.

G. The City shall perform all inspections and acceptance of the construction work for conformance of the work with the Contract Documents. Inspection of construction activities shall not constitute a guarantee or warranty of the adequacy of performance.

H. Daily Inspection reports completed by the City will be available in the construction management office for inspection and copying by Comcast.

I. The City's Contractor will excavate the trenches, accommodate and coordinate the installation of underground utilities, install vaults and conduits, furnish and install bedding material, backfill and compact the trenches, and perform any restoration required by the Contract Documents. The Contractor will exercise reasonable care in the performance of the work herein provided for, and will install Comcast's conduit and utility vaults in accordance with the Contract Documents.

J. If there is any discrepancy between the City's Contract Documents and Comcast's telecommunications system plans, the parties mutually agree to work together to resolve such discrepancy.

K. The City shall keep reasonably itemized and detailed progress payments covering the cost of construction and consulting services. Upon installation and completion of Comcast's Telecommunication System, the City will determine the actual cost of construction and other costs attributable to Comcast's Telecommunication System, including but not limited to easement costs, proportional shares of Schedule A bid item costs (Mobilization, Unexpected Site Changes) and Construction Management Consultant Services provided by the City. Comcast agrees to pay all construction costs associated with the Telecommunication System.

L. The City shall provide Comcast a reproducible copy of the Project "as built" plan sheets showing its completed utilities, provided that construction of said utilities has been completed under the terms of this Agreement.

Provided to Builders Exchange of WA, Inc. For usage Conditions Agreement see www.bxwa.com - Always Verify Scale

M. The City reserves the right to review and reject plans and specifications for installation of any utility facilities not in compliance with City standards or not in conformance with the City's Contract Documents for the Project.

N. The City's Contractor shall prepare a schedule of the work ("Project Schedule") in accordance with the Contract Documents for the parties to review. Comcast shall review and make written comments concerning the Project Schedule for coordination and completion of Comcast's Work (as defined herein) in a timely manner. If Comcast does not provide the City with its written comments regarding the Project Schedule within ten (10) working days, the Project Schedule shall be considered accepted by Comcast. The City and Contractor will review Comcast's comments and will work with Comcast to reconcile those comments to arrive at a mutually acceptable Project Schedule that accommodates Comcast's Work. Once the Project Schedule has been agreed upon, Comcast agrees to timely perform its portion of the work on the Telecommunication System and its other duties under this Agreement in conformance with the Project Schedule.

O. The City or its Contractor will provide the labor and equipment for the off-loading and storage of Comcast duct and vault materials to the job site. The City's Contractor will provide secure staging and storage areas for duct and vault materials provided by Comcast. The City's Contractor shall be responsible for the security and condition of these materials until they are installed and accepted by Comcast or returned to Comcast's custody.

V. COMCAST'S WORK

A. Comcast shall coordinate its activities with the City's Contractor and other utility crews on a continuous basis. This coordination shall include, but not be limited to the following:

1. An authorized representative of Comcast shall attend the Preconstruction Meeting;

2. The City's Contractor shall prepare the Project Schedule, in accordance with the Contract Documents. Comcast shall complete its work in accordance with the Project Schedule. Comcast will not be held liable for any delays in the Schedule prior to the commencement of their work. Comcast will only start its work after significant sections of vault and conduit are in place to ensure that Comcast or its contractor's crews will not have to adjust their working schedule to accommodate another utility that is trying to work in the same area.

3. A weekly meeting will be held in which the City's Contractor will provide a schedule and list of materials needed for the following two weeks (hereinafter the "Bi-Weekly Schedule"). Comcast will have five (5)

Provided to Builders Exchange of WA, Inc. For usage Conditions Agreement see www.bxwa.com - Always Verify Scale

working days to deliver the list of materials given to them at the weekly meeting. An authorized representative from Comcast shall attend each weekly meeting and provide weekly progress reports. The Comcast representative shall be responsible for coordinating the delivery of materials in accord with the Bi-Weekly Schedule at these weekly meetings.

4. Comcast shall furnish all materials including vaults, conduits, and all other materials necessary for installation of the vaults and conduits required by the City's Contractor for that week, not less than five (5) working days prior to the date that the work is scheduled based upon the weekly meeting. The City's Contractor shall provide a location to Comcast of where the materials shall be delivered, off loaded by the City's contractor and placed in a secure area. Comcast will have a representative present when materials are delivered to the site to verify materials are not damaged and are appropriate for the work.

5. Comcast will provide an inspector on-site, on 24 hours notice, to inspect the installation of all vault and conduit installation work. Comcast will not provide a daily on-site inspector, but will with 24 hours notice provide an inspector to inspect the requested area of a joint trench for the placement of their vaults and conduits. Comcast's inspector shall not direct the City's Contractor in any manner; the Comcast inspector shall communicate all requests and comments directly to the City's inspector.

B. The City will provide Comcast written notice that the Contractor has completed installation of Comcast's conduit and vault materials (hereinafter the "Completion Notice"). Within ten (10) working days after receipt of the Completion Notice, Comcast will issue written notice of any deficiencies or other items requiring completion or will issue written notification of acceptance. The City will review the noted deficiencies and other items and will order the Contractor to complete the approved items. If Comcast fails to respond to the Completion Notice within ten (10) working days, the Comcast conduit and vault system shall be considered complete and accepted by Comcast.

C. Once significant sections of vault and conduit installation are completed by the City (as determined by the City), and accepted by Comcast, the City will issue a Notice to Proceed to Comcast to commence installation of its conductors and equipment. Comcast will not have to adjust their working schedule to accommodate another utility, such as PSE or Frontier that are trying to work in the same area. Comcast shall complete installation of the conductors and equipment within fifteen (15) working days from the City's Notice to Proceed. Comcast shall notify the City in writing when the new underground system is energized. Comcast will coordinate its conductor and equipment installation such that Comcast, or its contractor, will install as much of this equipment as possible prior to completion of the entire vault and

Provided to Builders Exchange of WA, Inc. For usage Conditions Agreement see www.bxwa.com - Always Verify Scale

conduit system by the City's Contractor. The City shall have the right to extend the time for completion based upon the progress or installation of the vaults and conduit and in order to coordinate various utilities and the Contractor.

D. Comcast will be responsible for system installation and wreck-out work associated with the installation. This work shall include, but not be limited to furnishing and installing all cables, conductors and electrical equipment for the conversion to underground; and for the removal of other equipment no longer needed.

E. Comcast will perform cut-over and transfer of existing customers and facilities to the new underground system where applicable within 15 working days. Comcast will notify such customers in writing 48 hours in advance of the pending outage. A copy of the notice shall be provided to the City or its representative when it is provided to customers. As provided in Section VI below, Comcast shall reimburse City for its share of installation of Comcast supplied materials and structures for private connections serving existing customers.

F. Once transfer of existing customers and facilities to the new underground system is complete, Comcast will remove all overhead systems (if any) within 5 working days.

G. Traffic control plans must be approved in advance by the City before implementation by Comcast. Comcast or its contractor will provide traffic control and flaggers for installation of new underground conductor and devices along with overhead construction and removal when required. Comcast will coordinate its traffic control with other utilities, the City's contractor and the City. In the event that lane closures are necessary for performance of work, Comcast shall be limited to working between the hours of 9AM to 3PM. The initial traffic control plan will be reviewed by the City in 10 working days and subsequent reviews will be completed in 5 working days. Driveway access to property owners shall remain open during Comcast's work. If alternate routes are needed to access businesses and residents, Comcast shall clearly identify the route changes and notify businesses, residents and City of the changes at least 48 hours in advance of the change. Traffic control plans must be approved 10 working days in advance by the City before implementation by Comcast.

H. All work required by Comcast that is not shown on the Contract Documents, including but not limited to trenching, cable, conduit, and equipment installation, will be the responsibility of Comcast. Comcast shall coordinate with private property owners in order to not delay the City's schedule. Coordination of work, and payment for necessary easements or agreements from private property owners, is the responsibility of Comcast.

Provided to Builders Exchange of WA, Inc. For usage Conditions Agreement see www.bxwa.com - Always Verify Scale

I. At the completion of the Project, Comcast will collect and haul off any of its unused materials from the Project staging area within 15 working days of being notified.

J. Comcast shall maintain any utility facilities constructed under this Agreement from the date of acceptance of the facilities by Comcast. The cost of any future improvements and/or maintenance, repairs, or corrections to any utility facilities covered under the terms of this Agreement shall be the exclusive responsibility of Comcast in accordance with this Agreement.

K. PER FEDERAL REQUIREMENTS, as applicable, all steel products (whether separate OR incorporated into an item) provided by Comcast shall be certified "Made in America" as required by and defined in the project Special Provisions under Section 1-06 – Buy America. Comcast shall provide all *Certificates of Material Origin* for all steel products.

VI. COST ALLOCATION

A. Lump sum. Comcast shall pay the estimated lump sum of $20,000 (see Exhibit A) to the City as an advance deposit for reimbursement of the City's work under this Agreement. The estimated lump sum includes Comcast's portion of the joint trenches, decided by the number of conduits placed, the extra excavation and placement costs for their vaults and a per foot price for the conduit placed. This compensation covers estimated installation costs, easement costs, and proportional share costs of mobilization and unexpected site changes, and construction management and inspection costs. This amount does not include any additional change order expenses that are caused by Comcast.

The parties acknowledge that Comcast will need at least 30 calendar days after receiving notice of the estimated lump sum amount to be able to meet the payment schedule below.

B. Comcast shall pay the estimated lump sum as follows:

1. 20% of the total estimated lump sum within thirty (30) calendar days of the signing of this Agreement.

2. 30% of the total estimated lump sum not more than sixty (60) calendar days after the City's Contractor has completed 50% of the utility undergrounding work.

3. The remaining 50% of the total estimated lump sum not more than sixty (60) calendar days after the City's Contractor has completed 100% of the underground utility work.

Provided to Builders Exchange of WA, Inc. For usage Conditions Agreement see www.bxwa.com - Always Verify Scale

4. If the actual cost of Comcast's portion of the underground work exceeds the "estimated lump sum" referenced in subsections 1-3, Comcast shall pay the remaining actual costs to the City within 30 calendar days of receiving an invoice in accordance with section IV (K).

5. The City will provide Comcast with advance notice of reasonably expected dates of completion of 50% and 100% of the underground utility work. Comcast agrees to initiate internal funding request procedures at the time that the advance notice is provided, so that Comcast's payments will be made as soon as possible after the actual completion dates, and within the maximum number of days specified in Paragraphs 1 through 4 above.

C. Change Orders. Payment for change orders shall be determined based upon the following:

1. **By City**. Comcast agrees to pay its share, as determined by the City based upon Section 1-09.4, Equitable Adjustment, 2014 Standard Specifications, of any additional expenses incurred that are attributable to errors in their design or conflicts not accounted for in the design, as well as additional expenses due to any delays caused by Comcast.

2. **By Comcast**. Approval of change orders requested by Comcast shall be obtained from the City. Comcast shall submit any change requested to be performed by the City's Contractor to the City's Resident Engineer. The City's Resident Engineer shall submit change order requests to the City's Contractor; obtain a price from the City's Contractor to perform the work, and notify Comcast of this price. Comcast shall have 24 hours with which to respond. Comcast shall be liable to the City for all additional costs incurred by the City to perform additional work.

D. Claims by City's Contractor. Comcast agrees to pay the entire cost of any claims made by the City's Contractor that are determined by the City to be caused by Comcast or related to Comcast's activities. These claims may include, but are not limited to, claims for delays caused by untimely installation of Comcast facilities, delays caused by Comcast's failure to timely provide materials, and any other claims caused by Comcast based upon disputes between the City's Contractor and Comcast's Contractor or Comcast's inspector.

VII. HOLD HARMLESS & INDEMNITY

A. 1. Comcast shall hold harmless, indemnify and defend the City, its officers, appointed and elected officials, employees, consultants, contractors and agents, from and against any and all claims, inquiries, administrative proceedings, actions, suits, liability, loss, expenses, damages, fines, assessments, penalties, and

Provided to Builders Exchange of WA, Inc. For usage Conditions Agreement see www.bxwa.com - Always Verify Scale

judgments of any nature whatsoever, including costs and attorney's fees in defense thereof, caused by or related to Comcast's work, activities, negligence, errors, breach of contract, and omissions including those of its employees, contractors, agents, and in the performance of this Agreement or by reason of Comcast's participation in this Project. PROVIDED FURTHER (and in no way limiting the generality of the foregoing) that in the event of the concurrent negligence of the parties, Comcast's obligations hereunder shall apply only to the percentage of fault attributable to Comcast, its officers, officials, employees, assigns, or and agents.

2. Comcast shall hold harmless, indemnify and defend the City, its officers, appointed and elected officials, employees, and agents from and against any and all claims, costs, expenses, actions, suits, liability, loss, damages and judgments of any nature whatsoever, including costs and attorney's fees in defense thereof, caused by or relating to Comcast's failure to timely complete Comcast's work.

B. Comcast specifically and expressly waives Comcast's immunity under the Washington Industrial Insurance Act, Title 51, only to the extent necessary to provide the City with a full and complete indemnity of claims made by the employees of Comcast and its contractors and subcontractors. The parties acknowledge that these provisions were specifically negotiated and agreed upon by them.

C. The provisions of this Section shall survive the expiration or earlier termination of the Agreement with regard to any event that occurred prior to or on the date of such expiration or earlier termination.

VIII. TERMINATION

The City has the right to terminate this Agreement if the City determines not to undertake the Project or to discontinue the Project. If the City determines to not undertake this Project or otherwise terminates this Agreement, the City shall reimburse Comcast for all labor, material, and equipment costs incurred prior to termination in accordance with the Contract Documents. Comcast waives any consequential damages related to such a termination.

IX. DISPUTE RESOLUTION

A. The City shall have the right to make the final determination as to the acceptability of all work.

B. If a dispute arises between Comcast and the City, both parties mutually agree that they will attempt to resolve the issues through mutual negotiation. In the event that the parties are not able to reach an agreement through such negotiation, the parties agree to engage in mediation in order to resolve the dispute. Mediation may be requested by either party, and shall be attempted prior to commencing any

Provided to Builders Exchange of WA, Inc. For usage Conditions Agreement see www.bxwa.com - Always Verify Scale

lawsuit. The parties agree to share the costs of mediation equally. In the event that mediation is unsuccessful and either party finds it necessary to commence legal proceedings to resolve the dispute, all such legal proceedings may only be brought in the Superior Court of King County, Washington. The prevailing party in any dispute shall be entitled to recover as costs of such a lawsuit its reasonable attorney's fees.

X. DISPOSITION OF ASSETS

Comcast owns and shall continue to own all personal property installed as part of the Project. These items are generally shown on the Telecommunications System Plans.

XI. CHANGES AND MODIFICATIONS

Either party may request changes, amendments, or additions to any portion of this Agreement. However, no such changes, amendments, or addition to any portion of this Agreement shall be valid or binding upon either party unless it is in writing and executed by both parties. All amendments shall be attached to and made part of the amended Agreement.

XII. NOTICES

Unless otherwise directed in writing, notices, reports and payments shall be delivered to each party as follows:

For the City:	For Comcast:
Attn: Kristen Overleese, PE	Attn: Jill Look
City Engineer	Supervisor
Or her Designee	Comcast OSP Engineering / Construction
City of Kenmore	King County / I-90 North
PO Box 82607	1525 75 ST SW #200
Kenmore, WA 98028-0607	Everett, WA. 98203

Notices mailed by either party shall be deemed effective on the date mailed. Either party may change its address for receipt of reports, notices, or payments by giving the other written notice of not less than five (5) working days prior to the effective date.

XIII. CONFLICTS BETWEEN ATTACHMENTS REFERENCED DOCUMENTS AND TEXT

Except as set forth in Section III of this Agreement, should any conflicts exist between any attached or referenced document, exhibit or schedule and the text of this Agreement, the text of this Agreement shall prevail.

Provided to Builders Exchange of WA, Inc. For usage Conditions Agreement see www.bxwa.com - Always Verify Scale

XIV. ENTIRE AGREEMENT GENERAL PROVISIONS

A. These provisions represent the entire agreement of the parties and may not be modified or amended except as provided herein. Any understanding whether oral or written which is not incorporated herein is expressly excluded.

B. This Agreement does not create a joint venture or partnership.

C. This Agreement is not intended to benefit or to be enforced by any third-party.

D. Comcast agrees to comply with the requirements of the Prevailing Wage Act (RCW 39.12) and agrees to file all required forms and statements deemed necessary by the City to comply.

IX. OTHER RIGHTS AND DUTIES CONTROLLED BY FRANCHISE

All other rights and duties of Comcast and the City of Kenmore concerning this Agreement are governed by the franchise between Comcast and the City of Kenmore, as it presently exists and as it may be hereafter amended.

Dated this _____ day of _____, 2016

CITY OF KENMORE

By:_____
Rob Karlinsey, City Manager

Date: _____

COMCAST

By:_____

Name:_____

Its _____

APPROVED AS TO FORM:

By: _____
City Attorney

Date: _____

Provided to Builders Exchange of WA, Inc. For usage Conditions Agreement see www.bxwa.com - Always Verify Scale

EXHIBIT A
COST ESTIMATE

Exhibit A
Pre-construction Estimate of Cost (16-C1516)

COMCAST COSTS	QTY	Unit Cost	
Comcast-Conduit 4 In. Diam. Install	1290	$5	$6,450.00
Comcast-Conduit 2 In. Diam. Install	360	$4	$1,440.00
Comcast-3642LA Precast Vault-Install	4	$1,500	$6,000.00
Adjust Utility Vault	1	$500	$500.00
		Subtotal	$14,390.00
Shared Schedule A Costs:			
Mobilization			$1,111.37
Unexpected Site Changes			$1,000.00
Easement Acquisition			TBD
Construction Management Services (Consultants)			$3,119.22
Total Estimated Amount (ROUNDED)			**$20,000.00**

Provided to Builders Exchange of WA, Inc. For usage Conditions Agreement see www.bxwa.com - Always Verify Scale

16-C1514

AGREEMENT
BETWEEN FRONTIER COMMUNICATIONS NORTHWEST INC.
AND THE CITY OF KENMORE
NE 181st STREET SIDEWALK - SOUTH (68TH AVE NE – 73RD AVE NE)
CIP PROJECT T-27

THIS AGREEMENT is made and entered into this _____ day of _____, 2016, by and between City of Kenmore, a political subdivision of the State of Washington (hereafter "CITY"), and Frontier Communications Northwest Inc., a Washington corporation (hereafter "FRONTIER").

WHEREAS, the CITY desires to construct road improvements (including aerial to underground utility conversion) to NE 181ST Street from approximately 400 feet east of 68th Avenue NE to approximately 400 feet west of 73rd Ave NE over a distance of approximately 700 feet; and

WHEREAS, in connection with the CITY'S road improvements, FRONTIER will construct and install certain utilities; and

WHEREAS, FRONTIER finds that it is in the best interest of the public for FRONTIER to work jointly with the CITY on the CITY'S road improvements and to include FRONTIER'S necessary items of work in the CITY'S construction contract for the road improvements; and

WHEREAS, the CITY finds that it is in the best interest of the public for the CITY to work jointly with FRONTIER to accomplish its road improvement project;

NOW, THEREFORE, it is mutually agreed as follows:

I. PURPOSE

The purpose of this Agreement is to provide for joint bidding and contracting of FRONTIER's utility installation project with the CITY's road improvement project. This Agreement will facilitate installation of FRONTIER's utility facilities, to be located within the CITY rights-of-way in the road improvement project area, and sets forth the terms and conditions of the CITY'S engineering, inspection, and contract administration services on behalf of FRONTIER.

Provided to Builders Exchange of WA, Inc. For usage Conditions Agreement see www.bxwa.com - Always Verify Scale

II. DURATION OF AGREEMENT

This Agreement shall become effective immediately upon the execution by both parties, and shall remain in effect until either party has received final payments, including all "true-up" payments, as detailed in Section V below, and Exhibit A attached hereto, unless terminated sooner, as provided herein. It is anticipated that this project will be completed by December 2016.

III. CITY RESPONSIBILITY

A. The CITY will undertake a public works construction project for improvements to NE 181st Street from approximately 400 east of 68th Avenue NE to 400 feet west of 73rd Ave NE, total length 700 feet, including aerial to underground utility conversion ("PROJECT"). The CITY reserves the right to determine not to undertake the PROJECT or to discontinue the PROJECT at any time. In the event that the CITY determines not to undertake the PROJECT, it shall provide written notice to FRONTIER of the same, which shall terminate this Agreement. In the event that the CITY determines to discontinue the PROJECT, the rights and responsibilities of each party upon such termination shall be as provided in Section VII below.

B. The City will be the lead agency for the Project and will be responsible for compliance with King County Housing and Community Development (HCD) Guidelines. WSDOT will provide certification acceptance authority during the Design and King County will provide certification acceptance during Construction phase of the Project. The City Engineer or designee shall act as the administrator and the City's representative for this cooperative undertaking.

C. The CITY will include FRONTIER's plans and specifications for the installation of FRONTIER's underground conduit and vault system, and other associated facilities, hereinafter referred to as "TELECOMMUNICATION SYSTEM", within the CITY's plans and specifications for the PROJECT.

D. The CITY shall be responsible for the competitive bidding, award and construction of the PROJECT, and may enter into a contract with the successful bidder, administer the contract and make payments to the contractor on behalf of the CITY and FRONTIER.

E. As required by State law, award of the bid shall be to the lowest responsible bidder submitting a responsive bid for the PROJECT, which includes the TELECOMMUNICATION SYSTEM work.

F. The CITY shall perform all inspections and acceptance of the PROJECT on behalf of the CITY and FRONTIER. Inspection of construction activities shall not constitute a guarantee or warranty of the adequacy of performance.

Provided to Builders Exchange of WA, Inc. For usage Conditions Agreement see www.bxwa.com - Always Verify Scale

G. The City shall prepare daily inspection reports, which will be available at City Hall for inspection and copying by FRONTIER. The CITY shall keep as-built record drawings for submission to FRONTIER at the completion of the PROJECT.

H. The CITY shall keep a reasonably itemized and detailed work record covering the cost of services performed on behalf of FRONTIER pursuant to this Agreement. Upon completion of the PROJECT, the CITY will determine its actual cost for the PROJECT. The CITY shall pay for all applicable engineering, labor and materials for the PROJECT in accordance to the Washington State laws, rules and regulations.

I. The CITY shall provide FRONTIER with an electronic copy of the "as built" plan sheets showing the TELECOMMUNICATION SYSTEM, provided that construction of the TELECOMMUNICATION SYSTEM has been completed under the terms of this Agreement.

J. The CITY reserves the right to review and reject plans and specifications submitted by FRONTIER for the TELECOMMUNICATION SYSTEM that are not in compliance with CITY standards or not in conformance with the City's plans and specifications for the PROJECT.

Provided to Builders Exchange of WA, Inc. For usage Conditions Agreement see www.bxwa.com - Always Verify Scale

IV. FRONTIER RESPONSIBILITY

A. FRONTIER shall provide the necessary engineering and design standards and specifications required for the CITY to incorporate the TELECOMMUNICATION SYSTEM into the PROJECT.

B. FRONTIER reserves the right to review and reject plans and specifications for the TELECOMMUNICATION SYSTEM that are not in compliance with FRONTIER's design standards and specifications. Ultimate responsibility for accuracy and completeness of the TELECOMMUNICATION SYSTEM design plans rests with FRONTIER.

C. FRONTIER shall coordinate its activities with the City's Contractor and other utility crews on a continuous basis. This coordination shall include, but not be limited to the following:

1. An authorized representative of FRONTIER shall attend the Preconstruction Meeting;

2. The City's Contractor shall prepare the Project Schedule, in accordance with the Contract Documents. FRONTIER shall complete its work in accordance with the Project Schedule. FRONTIER will not be held liable for any delays in the Schedule prior to the commencement of their work. FRONTIER will only start its work after significant sections of vault and conduit are in place to ensure that FRONTIER or its contractor's crews will not have to adjust their working schedule to accommodate another utility that is trying to work in the same area.

3. A weekly meeting will be held in which the City's Contractor will provide a schedule and list of materials needed for the following two weeks (hereinafter the "Bi-Weekly Schedule"). FRONTIER will have five (5) working days to deliver the list of materials given to them at the weekly meeting. An authorized representative from FRONTIER shall attend each weekly meeting and provide weekly progress reports. The FRONTIER representative shall be responsible for coordinating the delivery of materials in accord with the Bi-Weekly Schedule at these weekly meetings.

4. FRONTIER shall furnish all materials including vaults, conduits, and all other materials necessary for installation of the vaults and conduits required by the City's Contractor for that week, not less than five (5) working days prior to the date that the work is scheduled based upon the weekly meeting. Conduit shall be provided in 20-foot length sections. The City's Contractor shall provide a location to FRONTIER of where the materials shall be delivered, off loaded by the City's contractor and placed in a secure area. FRONTIER will have a representative present when materials are delivered to the site to verify materials are not damaged and are appropriate for the work.

Provided to Builders Exchange of WA, Inc. For usage Conditions Agreement see www.bxwa.com - Always Verify Scale

5. FRONTIER will provide an inspector on-site, on 24 hours notice, to inspect the installation of all vault and conduit installation work. FRONTIER will not provide a daily on-site inspector, but will with 24 hours notice provide an inspector to inspect the requested area of a joint trench for the placement of their vaults and conduits. FRONTIER's inspector shall not direct the City's Contractor in any manner; the FRONTIER inspector shall communicate all requests and comments directly to the City's inspector.

D. The City will provide FRONTIER written notice that the Contractor has completed installation of FRONTIER's conduit and vault materials (hereinafter the "Completion Notice"). Within ten (10) working days after receipt of the Completion Notice, FRONTIER will issue written notice of any deficiencies or other items requiring completion or will issue written notification of acceptance. The City will review the noted deficiencies and other items and will order the Contractor to complete the approved items. If FRONTIER fails to respond to the Completion Notice within ten (10) working days, the FRONTIER conduit and vault system shall be considered complete and accepted by FRONTIER.

E. Once significant sections of vault and conduit installation are completed by the City (as determined by the City), and accepted by FRONTIER, the City will issue a Notice to Proceed to FRONTIER to commence installation of its conductors and equipment. FRONTIER will not have to adjust their working schedule to accommodate another utility, such as PSE or Comcast that are trying to work in the same area. FRONTIER shall complete installation of the conductors and equipment within fifteen (15) working days from the City's Notice to Proceed. FRONTIER shall notify the City in writing when the new underground system is energized. FRONTIER will coordinate its conductor and equipment installation such that FRONTIER, or its contractor, will install as much of this equipment as possible prior to completion of the entire vault and conduit system by the City's Contractor. The City shall have the right to extend the time for completion based upon the progress or installation of the vaults and conduit and in order to coordinate various utilities and the Contractor.

F. FRONTIER will be responsible for system installation and wreck-out work associated with the installation. This work shall include, but not be limited to furnishing and installing all cables, conductors and electrical equipment for the conversion to underground; and for the removal of other equipment no longer needed.

G. FRONTIER will perform cut-over and transfer of existing customers and facilities to the new underground system where applicable within 15 working days after initial installation of new conductors and equipment is complete. FRONTIER will notify such customers in writing 48 hours in advance of the pending outage. A copy of the notice shall be provided to the City or its representative when it is provided to customers.

Provided to Builders Exchange of WA, Inc. For usage Conditions Agreement see www.bxwa.com - Always Verify Scale

H. Once transfer of existing customers and facilities to the new underground system is complete, FRONTIER will remove all overhead systems (if any) within ten (10) working days.

I. Traffic control plans must be approved in advance by the City and WSDOT before implementation by FRONTIER. FRONTIER or its contractor will provide traffic control and flaggers for installation of new underground conductor and devices along with overhead construction and removal when required. FRONTIER will coordinate its traffic control with other utilities, the City's contractor and the City. In the event that lane closures are necessary for performance of work, FRONTIER shall be limited to working between the hours of 9AM to3PM. The initial traffic control plan will be reviewed by the City and WSDOT in 15 working days and subsequent reviews will be completed in 10 working days. Driveway access to property owners shall remain open during FRONTIER's work. If alternate routes are needed to access businesses and residents, FRONTIER shall clearly identify the route changes and notify businesses, residents and City of the changes at least 48 hours in advance of the change. Traffic control plans must be approved 10 working days in advance by the City before implementation by FRONTIER.

J. At the completion of the Project, FRONTIER will collect and haul off any of its unused materials from the Project staging area within 15 working days of being notified.

K. FRONTIER shall maintain any utility facilities constructed under this Agreement from the date of acceptance of the facilities by FRONTIER. The cost of any future improvements and/or maintenance, repairs, or corrections to any utility facilities covered under the terms of this Agreement shall be the exclusive responsibility of FRONTIER in accordance with this Agreement.

L. FRONTIER acknowledges that time is of the essence in completing FRONTIER"s installation of FRONTIER's telecommunication facilities not installed by the City's contractor and that any delay in completing such work could delay the PROJECT. FRONTIER shall be responsible for any and all excess costs incurred by the CITY as a direct result of FRONTIER'S failure to timely perform under this Agreement, if such failure is not attributable to delays by the CITY's contractor, COMCAST or PSE.

M. PER FEDERAL REQUIREMENTS, as applicable, all steel products (whether separate OR incorporated into an item) provided by Frontier shall be certified "Made in America" as required by and defined in the project Special Provisions under Section 1-06 – Buy America. FRONTIER shall provide all *Certificates of Material Origin* for all steel products.

Provided to Builders Exchange of WA, Inc. For usage Conditions Agreement see www.bxwa.com - Always Verify Scale

V. PAYMENT

A. All conversion costs associated with the installation of Frontier's facilities will be borne by the City. The final cost to the City will be as stated in the RCW 35.99.060. Section 3b of RCW 35.99.060 states, in part, that the City will pay for "the additional incremental cost of underground compared to aerial relocation". These estimated costs are defined in Exhibit "B".

B. Upon completion of the PROJECT, the estimated costs on Exhibit B to this Agreement shall be "trued-up" with the actual costs incurred, and any differences shall be remitted to the appropriate party within ninety (90) days of approval of the true up by FRONTIER and the CITY. The term "true-up" is defined as reconciling funds owed by one party to another by converting estimated costs to the actual costs of the labor, equipment and materials necessary to perform the applicable work substantiated by invoices, timesheets, or other verification of the actual costs suitable to the City for authorization of payment. This true up will be done to ensure payments to either party are equitable and in conformance with applicable laws.

C. During construction of the PROJECT and for a period of not less than three (3) years after the effective date of this Agreement all records pertaining to the PROJECT and accounting shall be kept available for inspection and audit by the parties and the State and copies of all records, accounts, documents or other data pertaining to the PROJECT will be furnished upon request. If any litigation, claim or audit is commenced, the records and accounts along with supporting documentation shall be retained until all litigation, claim or audit finding has been resolved even though such litigation, claim, or audit continue past the three-year retention period.

VI. HOLD HARMLESS AND INDEMNIFICATION

FRONTIER shall hold harmless, indemnify and defend the CITY, its officers, appointed and elected officials, employees and agents, from and against any and all claims, actions, suits, liability, loss, expenses, damages and judgments of any nature whatsoever, including costs and attorney's fees in defense thereof, for injury, sickness, liability or death to persons or damage to property or business, caused by or arising out of FRONTIER's negligent or intentional acts, errors or omissions in the performance of this Agreement and arising by reason of FRONTIER's participation in the PROJECT; provided, that in the event of the concurrent negligence of the parties, FRONTIER's obligations hereunder shall apply only to the percentage of fault attributable to FRONTIER, its officers, officials, employees or agents.

The CITY shall hold harmless, indemnify and defend FRONTIER, its officers, appointed and elected officials, employees and agents, from and against any and all claims, actions, suits, liability, loss, expenses, damages and judgments of any nature whatsoever, including costs and attorney's fees in defense thereof, for injury, sickness, liability or death to persons or damage to property or business, caused by or arising out of the CITY's negligent or intentional acts, errors or omissions in the performance of this

Provided to Builders Exchange of WA, Inc. For usage Conditions Agreement see www.bxwa.com - Always Verify Scale

Agreement and arising by reason of the CITY participation in the PROJECT; provided, that in the event of the concurrent negligence of the parties, the CITY's obligations hereunder shall apply only to the percentage of fault attributable to the CITY, its officers, officials, employees or agents.

VII. TERMINATION

The CITY has the right to terminate this Agreement if the CITY determines not to undertake the PROJECT or to discontinue the PROJECT, in which case, the CITY shall notify FRONTIER in writing and reimburse FRONTIER for all incurred costs prior to the CITY's notice of termination. FRONTIER waives any consequential damages related to such a termination.

VIII. CHANGES TO THE CONSTRUCTION CONTRACT

A. The parties understand that during the course of construction of the PROJECT, there may be unforeseen conditions requiring immediate resolution during the construction phase of this Agreement, such as construction disputes and claims, changed conditions and changes to the Scope of Work. A modification, change order or extra work order not relating to the TELECOMMUNICATION SYSTEM requires approval by only the duly authorized representative of the CITY.

B. Where the unforeseen condition arises out of FRONTIER's portion of the Scope of Work, the CITY will notify FRONTIER of the request for a contract modification, change order or extra work order. Upon receipt of such written notice, FRONTIER shall respond to the CITY within twenty-four (24) hours. If the amount of the requested change is Five Thousand Dollars ($5,000) or greater, the duly authorized representative of each party must sign the change order prior to commencement of work. If the amount of the requested change is less than Five Thousand Dollars ($5,000), the duly authorized representative of FRONTIER must approve the change order verbally or in writing prior to commencement of work, and if the approval was verbal, the approval must be followed by a written confirmation within five (5) working days.

C. Each party, in the event of a claim by the CITY'S contractor, shall be responsible for its share of a claim filed by the contractor arising out of that party's portion of the Scope of Work.

IX. DISPUTE RESOLUTION

In the event the CITY and FRONTIER disagree over whether the Contractor has fulfilled its obligations under the CITY'S contract, the CITY reserves the right to make the final decision as to the acceptability of the work.

If a dispute arises between FRONTIER and the CITY, both parties mutually agree that they will attempt to resolve the issues through mutual negotiation. In the event that the parties are not able to reach an agreement through such negotiation, the parties agree to engage in mediation in order to resolve the dispute. Mediation may be requested by

Provided to Builders Exchange of WA, Inc. For usage Conditions Agreement see www.bxwa.com - Always Verify Scale

either party, and shall be attempted prior to the institution of any lawsuit arising under this Agreement. The parties agree to share the costs of mediation equally.

This Agreement has been made pursuant to, and shall be construed according to, the laws of the State of Washington. In the event that mediation is unsuccessful and either party finds it necessary to institute legal proceedings to enforce any provision of this Agreement, such proceedings may only be brought in the Superior Court of King County, Washington. In the event that a lawsuit is instituted to enforce any provision of this Agreement, the prevailing party shall be entitled to recover all costs of such a lawsuit, including reasonable attorney's fees.

X. CHANGES AND MODIFICATIONS

Either party may request changes, amendments, or additions to any portion of this Agreement. However, no such changes, amendments, or addition to any portion of this Agreement shall be valid or binding upon either party unless it is in writing and executed by both parties. All amendments shall be attached to and made part of this Agreement.

XI. NOTICES

Unless otherwise directed in writing, notices, reports and payments shall be delivered to each party as follows:

For the City:

Attn: Kris Overleese, PE
City Engineer
or her designee
City of Kenmore
PO Box 82607
Kenmore, WA 98028-0607

For Frontier:

Attn: _____
Frontier Communications Northwest Inc.
1800 41st St., M/C WA01016C
Everett, WA 98201

With a copy to:
Associate General Counsel
Frontier Communications Corporation
9260 E. Stockton Blvd
P.O. 340
Elk Grove, CA 95624

Notices mailed by either party shall be deemed effective on the date mailed. Either party may change its address for receipt of reports, notices, or payments by giving the other written notice of not less than five (5) working days prior to the effective date.

Provided to Builders Exchange of WA, Inc. For usage Conditions Agreement see www.bxwa.com - Always Verify Scale

XII. CONFLICTS BETWEEN ATTACHMENTS AND TEXT

Should any conflicts exist between any attached exhibit or schedule and the text of this Agreement, the text shall prevail.

XIII. ENTIRE AGREEMENT

These provisions represent the entire agreement of the parties and may not be modified or amended except as provided herein. Any understanding, whether oral or written, which is not incorporated herein, is expressly excluded.

IN WITNESS WHEREOF, the parties hereto have executed this Agreement as of the day and year first written above. The signatories below represent and warrant they possess the authority to execute this contract and bind their bind their respective entities.

CITY OF KENMORE

ATTEST:

By:_____
City Clerk

Date:_____

APPROVED AS TO FORM:

By:_____
City Attorney

Date:_____

APPROVED:

By:_____
City Manager

Date:_____

FRONTIER COMMUNICATIONS NORTHWEST INC.

APPROVED AS TO FORM:

By:_____
Phyllis A. Whitten
Associate General Counsel--West Region

Date:_____

APPROVED:

By:_____
Justin Fontes
Manager-Network Engineering

Date:_____

Provided to Builders Exchange of WA, Inc. For usage Conditions Agreement see www.bxwa.com - Always Verify Scale

EXHIBIT "A"

PLANS AND SPECIFICATIONS and SCOPE OF WORK

FRONTIER's utility system element of the PROJECT consists of the installation of Frontier's underground system and removal of all FRONTIER's aerial and related facilities within the PROJECT. FRONTIER's underground system will comprise a **telecommunications system and a fiber optic system**. In general this Contract includes the trenching, placing and restoration, for the installation of vaults and conduits as identified in the PROJECT Bid Documents Plans and Specifications. It is understood the general construction window for FRONTIER's installation begins after the CITY's Contractor has removed all hard surfaces (IE: Asphalt Treated Base, concrete materials) of existing road right of way and all permanent sub-grade materials are in place. This includes grading and filing to reach the required subgrade horizontal and vertical controls as specified by the CITY's "Plans and Specifications". It is further agreed FRONTIER's installation is to be completed prior to CITY's Contractor placing any permanent hard surface (IE: Asphalt Treated Base, concrete, curb, sidewalk, etc) materials.

The Plans and Specifications compiled by FRONTIER are for the installation of FRONTIER's Telecommunication System only. The only correlation between the CITY's plans and FRONTIER's is FRONTIER's use of the Project Stationing with reference to Horizontal Controls. The City is responsible for actual Horizontal and Vertical controls in accordance to the "National Electrical Code Specifications (NESC) and the Washington State –"Standard Specifications for Road, Bridge and Municipal Construction" Manual.

The type of backfill material to be used for FRONTIER's trench line and manhole installation will be determined by the CITY.

It has been agreed to allow washed sand as Pipe Zone bedding material for installations under the proposed sidewalk area. This is acceptable as long as a minimum of three inches of the washed sand is placed prior to the conduit installation. This will ensure the required three inches bedding is in place; assurance of 100% conduit encapsulation will be required. Control Density Fill (WSDOT-Grade) will be the pipe zone material for areas within the roadway (curb to curb) prism.

PER FEDERAL REQUIREMENTS, as applicable, all steel products (whether separate OR incorporated into an item) provided by Frontier shall be certified "Made in America" as required by and defined in the project Special Provisions under Section 1-06 – Buy America. FRONTIER shall provide all Certificates of Material Origin for all steel products.

Provided to Builders Exchange of WA, Inc. For usage Conditions Agreement see www.bxwa.com - Always Verify Scale

EXHIBIT "B"

ADDITIONAL INCREMENTAL COST ESTIMATE OF UNDERGROUND COMPARED TO AERIAL RELOCATION

SUMMARY:			
Aerial to Underground Conversion			
FRONTIER Labor			
Preliminary Engineering		$	2,738.70
Construction Engineering		$	3,347.30
Construction Inspection		$	2,119.90
Underground Cable Installation		$	8,204.68
Aerial System Removal		$	6,921.06
FRONTIER Materials (Conduit, Vaults, Cable, etc.)		$	20.997.28
Aerial to Underground Conversion Cost	**Sub-total**	$	44,328.92
Aerial to Aerial Relocation			
FRONTIER Labor			
Preliminary Engineering		$	2,236.05
Construction Engineering		$	2,732.95
Aerial System Relocation		$	12,945.70
FRONTIER Materials (Poles, Guy Wire, Cable, etc.)		$	3,776.32
Aerial to Aerial Relocation Cost	**Sub-total (Credit)**	-$	21,691.02
Telecommunications Upgrades and Capacity Improvements Sub-total (Credit for existing underground vault adjustments)		-$	500
TOTAL ESTIMATED CITY PAYMENT TO FRONTIER		$	**22,137.90**

Provided to Builders Exchange of WA, Inc. For usage Conditions Agreement see www.bxwa.com - Always Verify Scale

16-C1512

CITY OF KENMORE – NORTHSHORE UTILITY DISTRICT INTERLOCAL AGREEMENT

FOR INCORPORATION OF NORTHSHORE UTILITY DISTRICT UTILITY WORK INTO THE CITY OF KENMORE'S NE 181st STREET SIDEWALK SOUTH IMPROVEMENTS PROJECT

The City of Kenmore (hereinafter the "City") and Northshore Utility District (hereinafter the "District"), both municipal corporations, in accordance with the Interlocal Cooperation Act (Chapter 39.34 RCW) do hereby agree as follows:

1. PURPOSE

The purpose of this Agreement is to provide for the replacement of a portion of the District's water mains and appurtenances (hereinafter the "Utility Work") along NE 181st Street, as identified on the water construction plans supplied to the City by the District, and payment by the District to the City for costs incurred by the City in avoiding or moving District water mains and services within the project area. The Utility Work design will be incorporated into the City approved construction drawings for the NE 181st Street Sidewalk South Improvements Project (hereinafter the "Improvement Project"). The parties have determined that it is in their mutual best interest to coordinate the Utility Work in conjunction with the Improvement Project.

2. THE PROJECT

The parties hereby agree that the District's plans for Utility Work, including without limitation appropriate connections on intersected side streets, will be incorporated in the City's plans for the Improvement Project. The District's Utility Work will be performed in accordance with the design performed by the District's professional engineering representative. The City's right-of-way improvements and the District's Utility Work are hereinafter referred to as "the Project."

3. THE CONSTRUCTION PROCEDURE

a. District Engineering, Design and Inspection

The District shall be responsible for the engineering and design, and inspection costs associated with the Utility Work. This work will be performed by the District's consultant. The District's utility plans, specifications, standard details and bid item schedule shall be submitted to the City for incorporation into the Project plan set for bidding purposes. The City shall incorporate the District's plans, specifications, standard details and schedule of items in such a manner as to allow the identification of costs for the Utility Work.

b. Contractor Selection

The City shall call for bids for performing the Project. The City shall incorporate the utility plans, the District's specifications, standard details, and schedule of items in such a manner as to allow the identification of costs for the Utility Work.

Provided to Builders Exchange of WA, Inc. For usage Conditions Agreement see www.bxwa.com - Always Verify Scale

c. City as Contracting Agency

The City shall serve as the contracting agency during construction for the parties and shall generally manage and oversee the construction of the District's Utility Work in conjunction with the Project. The District will provide inspection of the Utility Work being performed. The District will be responsible for any and all excess costs incurred by the City as a direct result of the District's failure to timely inspect the Utility Work performed by the contractor. Compaction requirements of the District will be incorporated with those of the City. The City's consultant will perform compaction testing on behalf of the District.

d. Change Orders

The City may approve changes in those parts of the construction contract providing for the Utility Work, provided that if any change order would change the nature of the work or would cause that portion of the contract price attributable to such relocation work to increase by more than $1,000.00 or cumulatively more than two percent (2%) of the original contract amount attributable to the Utility Work, the District's prior consent to the change orders shall be obtained, which consent shall not be unreasonably withheld. In the event that consent is unreasonably withheld, the District will be held responsible for all liability incurred by the City resulting from such withholding of consent. The City shall immediately provide the District with copies of all requests for change orders and executed change orders associated with Utility Work regardless of the dollar amount of the change order.

e. Payment Procedure

The City shall provide the District with monthly progress billings for the construction administration and construction of that portion of the Project attributable to the District's Utility Work. The City and District will meet to review and agree upon progress and proposed disbursements to Project contractors. The District shall pay the City for the cost of the Utility Work, as provided in the contract bid (as adjusted by change order), based upon agreed upon progress, within forty five (45) days of receipt of each billing.

f. Payments to Contractor

The City shall make all disbursements to Project contractors.

g. Final Acceptance

That portion of the contractor's work consisting of the District's Utility Work shall not be given final acceptance until it is approved in writing by the City and the District. Neither party shall unreasonably withhold approval for final acceptance hereto. The utilities shall become the property of the District upon final acceptance. The water mains taken out of service as a result of this project shall remain the property of the District. The City agrees to assign all warranties related to the Utility Work to the District.

Provided to Builders Exchange of WA, Inc. For usage Conditions Agreement see www.bxwa.com - Always Verify Scale

h. Staff Time, Costs, and Incidental Expenses

At all times material hereto, the parties shall separately bear their own staff time, engineering costs, and incidental expenses except as specifically provided elsewhere in this Agreement.

Should any claims arise related to the Utility Work portion of the Project, the City shall handle and administer such claims in the same manner as it would handle any other claims on the Project and the District shall reimburse the City for all expenses associated with handling of such claims. The City shall immediately notify the District and keep it informed as to the progress of the claim. The District will provide guidance to the City regarding proposed terms of settlement. Any decision regarding the settlement or prosecution of a claim shall be approved by the District prior to being finalized. If the District and the city cannot agree as to the prosecution or settlement of a claim, the District may prosecute or defend the claim and the City will assign such claims to the District. The District agrees to pay all costs of prosecution or defense if assigned such claims and defend, indemnify and hold harmless the City from all damages the City suffers from the District's prosecution or defense of the claim.

i. District Inspections

The District will provide construction observation services for the Utility Work. District field personnel will report to the City's Resident Engineer and will provide observation while Schedule B construction is being conducted. Any issues with the Contractor will be brought to the attention of the City's Resident Engineer. District field personnel will be required to complete all required documentation (IDRs, Field Note records and any other forms), and submit them electronically via Sharepoint. The City's consultant will provide Sharepoint training as needed. All construction documentation will be managed through the City's consultant.

j. Other Costs

Other costs to the City and to be reimbursed by the District shall include proportional shares of Schedule A bid item costs (Mobilization, Traffic Control, Temporary Erosion Control) and Construction Management Consultant Services provided by the City (see Exhibit A for pre-construction estimate of cost). Reimbursement requests shall be based upon actual costs, substantiated by contract unit prices, invoices or other verification of the actual costs suitable to the District for authorization of payment. Actual time of payment shall be as stated in section "e" above.

4. INDEMNIFICATION AND INSURANCE

a. The City shall require the Contractor building the Project to have Northshore Utility District, its Commissioners, officials, agents and employees named as additional insureds on all policies of insurance to be maintained by contractor(s) under the terms of any Project contract(s) with the City. The Contractor building the Project shall be required to maintain Public Liability Insurance.

b. The City shall require Contractor building the Project to indemnify, defend, and save harmless the District and its Commissioners, officers, agents, or employees from any

Provided to Builders Exchange of WA, Inc. For usage Conditions Agreement see www.bxwa.com - Always Verify Scale

claim, real or imaginary, filed against the District or its officers, agents, or employees alleging damage or injury arising out of the contractor's participation in the Project.

c. The City shall require Contractor building the Project to be solely and completely responsible for safety and safety conditions on the job site, including the safety of all persons and property during performance of the work. Contractor shall comply with all applicable City, County, and State regulations, ordinances, orders, and codes regarding safety. The contractor's attention is directed to the requirements of the Washington Industrial Safety and Health Act, WISHA, RCW 49.17.

5. NOTICES AND OTHER COMMUNICATIONS

All notices and other formal communications to be delivered under this Agreement shall be mailed or delivered to the following:

City of Kenmore
Kristen Overleese, Public Works
Director / City Engineer
or her designee
P.O. Box 82607
Kenmore, Washington 98028 - 0607

Northshore Utility District
Dave Kaiser, Engineering Director
or his designee
P.O. Box 489
Kenmore, Washington 98028 - 0489

Provided, however, the parties may change their respective designation of representatives by written notification to one another.

6. This Agreement may be signed in counterparts, and, if so signed, shall be deemed one integrated document.

The date of this Agreement is _____ ___, 2016.

CITY OF KENMORE

_____
City Manager

Approved as to form:

_____
City Attorney

NORTHSHORE UTILITY DISTRICT

_____
General Manager

Approved as to form:

_____
Utility District Attorney

Provided to Builders Exchange of WA, Inc. For usage Conditions Agreement see www.bxwa.com - Always Verify Scale

EXHIBIT A
COST ESTIMATE

Pre-construction Estimate of Cost (16-C1512)	
NORTHSHORE UTILITY DISTRICT COSTS	
Schedule B Total	$56,150.00
Schedule B Sales Tax (9.5%)	$5,334.25
Shared Schedule A Costs:	
Traffic Control	$8,443.80
A.C. Overlay (to be assessed with North Sidewalk)	TBD
Temporary Erosion Control	$335.77
Mobilization	$3,977.93
Construction Management Services (Consultants)	$11,164.67
Total Estimated Amount	**$86,000.00**

Provided to Builders Exchange of WA, Inc. For usage Conditions Agreement see www.bxwa.com - Always Verify Scale

APPENDIX D

Provided to Builders Exchange of WA, Inc. For usage Conditions Agreement see www.bxwa.com - Always Verify Scale

Northshore Utility District
King County, Washington

2014 ENGINEERING SPECIFICATIONS

MATERIALS OF CONSTRUCTION

February, 2014

Provided to Builders Exchange of WA, Inc. For usage Conditions Agreement see www.bxwa.com - Always Verify Scale

TABLE OF CONTENTS

SECTION 4

ENGINEERING SPECIFICATIONS
Materials of Construction

1. GENERAL 1
2. SEWER PIPE AND FITTINGS 1
3. MANHOLES 3
4. MANHOLE AND CLEANOUT FRAME AND COVERS 9
5. WATER MAIN PIPE AND APPURTENANCES 9
6. STEEL CASING 13
7. FOUNDATION, BEDDING AND BACKFILL GRAVEL FOR TRENCHES . 14
8. REPLACING ROAD SURFACE 15
9. GRASS SEEDING AND SOD 16

Provided to Builders Exchange of WA, Inc. For usage Conditions Agreement see www.bxwa.com - Always Verify Scale

Section 4 – Engineering Specifications Materials of Construction

1. GENERAL

The type and class of materials to be used shall be as shown on the project plans. Where no specific reference is shown, the following specifications shall govern the materials used. All materials shall be new and undamaged of a known brand, with replacement parts readily available from the general Seattle area.

Prior to the installation of any of the facilities required on the project, all materials shall be approved by the District.

All reference specifications herein shall be of the latest revision.

2. SEWER PIPE AND FITTINGS

Sewer pipe material shall be of the following type unless otherwise specified or as indicated on the Plans:

Locations with less than four (4) feet or more than eighteen (18) feet of cover from finished grade	Class 52 Ductile Iron Pipe
Locations with between four (4) feet and eighteen (18) feet of cover from finished grade	PVC Pipe, ASTM 3034, SDR 35
As indicated on the Plans	High Density Polyethylene (HDPE) Pipe

(a) DUCTILE IRON SEWER PIPE AND FITTINGS

1. Ductile iron pipe shall be new, Class 52, cement-lined, conforming to AWWA C151.

2. Ductile iron pipe shall be push-on joint. Pipe shall be furnished with a single rubber ring gasket lubricated to effect the seal.

3. Restrained joint pipe shall be push-on joint pipe with U.S. Pipe “TR Flex” or U.S. Pipe “Field Lok” gaskets, or equal. Each length of pipe shall be clearly marked with the manufactures identification, year, thickness, class of pipe and weight.

4. The Contractor shall furnish certification from the manufacturer of the pipe and gasket being supplied that the inspection and all of the

Provided to Builders Exchange of WA, Inc. For usage Conditions Agreement see www.bxwa.com - Always Verify Scale

specified tests have been made and the results thereof comply with the requirements of this standard.

5. Ductile iron fittings shall be short body with a 350 psi pressure rating for mechanical joint fittings and 250 psi for flanged fittings. All fittings shall be cement lined and shall be in conformance with AWWA C153.

(b) PVC SEWER PIPE AND FITTINGS (ASTM D3034)

All PVC pipe and fittings shall be integral wall bell and spigot, rubber gasket joint, unplasticized polyvinyl chloride (PVC) pipe in conformance with ASTM D3034 and shall have a maximum SDR of 35. PVC pipe shall have a minimum "pipe stiffness" of 46 psi at 5 percent deflection when tested in accordance with ASTM Designation D2412 and a minimum impact strength of 210 foot-pounds based upon ASTM D3034.

All pipes shall be clearly marked with the manufactures identification, year, and class of pipe.

All fittings and accessories shall be manufactured and furnished by the pipe supplier, or shall be District approved equal.

Pipe joints shall use flexible elastomeric gaskets conforming to ASTM D3212.

Connections for side sewer stubs shall be 6 inches inside diameter tee fittings. Wye branches shall be used where the sewer line size is less than 8" inside diameter.

For side sewer connections to existing sewer mains, Inserta TEE Fatboy fittings will be allowed and shall be installed per the manufacturer's installation guidelines.

(c) HIGH DENSITY POLYETHYLENE (HDPE) SEWER PIPE

High Density Polyethylene (HDPE) sewer pipe shall be PE 3408 high density conforming to ASTM D3350 cell classification PE345564C, with a DR of 11 unless otherwise specified.

The workmanship shall be of the highest level compatible with current commercial practice. The PE pipe shall be homogeneous throughout and free of visible cracks, holes, foreign inclusions, or other injurious defects. It shall be uniform in color, opacity, density and other physical properties.

Butt fusion of pipes and fittings shall be performed in accordance with the pipe manufacturer's recommendations as to equipment and technique.

Provided to Builders Exchange of WA, Inc. For usage Conditions Agreement see www.bxwa.com - Always Verify Scale

The pipe shall be fused by a certified installer who has a demonstrated ability to fuse polyethylene pipe in the manner recommended by the pipe supplier and/or the fusion manufacturer.

The pipe shall be Phillips 66 Driscopipe 8700 or District approved equal.

(d) FLEXIBLE COUPLING ADAPTERS

Flexible coupling adapters shall meet the specifications set forth in the AWWA Standard C219 coupling specification and be rated for working pressures up to 250 psi. Flexible coupling adapters shall be Romac XR501, Hymax 2000, or District approved equal.

3. MANHOLES

Manholes shall be of the offset type, shall be precast concrete sections with a precast base, and shall be made from 3,000 psi structural concrete. All manhole joints shall be watertight and shall be confined O-ring type. They shall be constructed in full compliance with the Standard Details and as further specified herein.

Manhole materials and manufacturing shall be in accordance with ASTM C478.

Minimum standard manhole depth is eight (8) feet and maximum depth is eighteen (18) feet. Depths other than within this range shall require special design and approval by the District.

The base sections and risers of the manholes shall be arranged so no pipes pass through the manhole joints.

(a) Manhole Sections

Manhole sections shall be placed and aligned so as to provide plumb vertical sides and vertical alignment of the ladder steps. The completed manhole shall be rigid, true to dimension and be watertight. The ladder shall be rigidly attached to the side of the manhole.

Manhole grade rings shall be reinforced 3,000 psi structural concrete, 24 inches in diameter and 4 inches high. Grade rings shall be set in a full-width bed of cement grout. Provide grout between rings and between upper ring and casting. Inside rings shall be troweled smooth with 1/2" (minimum) of grout in order to provide a watertight surface.

In addition to the O-ring rubber gaskets, all new manhole joints shall be sealed with a flexible butyl joint sealant conforming to ASTM C990-96 and Federal Specification SS-S-210. The flexible butyl joint sealant shall be “Kent Seal #2” as manufactured by Hamilton-Kent Company or “Ram-Nek” as manufactured by K.T. Snyder Company.

Provided to Builders Exchange of WA, Inc. For usage Conditions Agreement see www.bxwa.com - Always Verify Scale

Steel lifting loops or hooks for precast manhole components shall be removed to a minimum depth of one (1) inch below the surface and the remaining hole packed with grout. Precast sections with damaged joint surfaces or with cracks or other damage that may permit infiltration will not be allowed.

Reinforcement for precast manholes shall be in accordance with ASTM C 478-97.

(b) BASE LINERS

All new manholes shall be installed with a prefabricated manhole base liner made of polypropylene (PP) and/or fiberglass reinforced plastic (FRP). The base liner shall be integrally cast and adequately anchored inside new precast concrete manhole base sections during the concrete casting process at the manhole suppliers manufacturing facility. The base liner shall be cast integral with the precast concrete manhole base section in accordance with the liner manufacturer's specifications. The liner must be fully supported during the casting process and lifting devices shall not penetrate the base liner.

The manhole base liner shall be prefabricated from a one piece homogeneous composite and/or thermoplastic with a minimum thickness of 3/16" (5 mm) and shall be in lengths and nominal inside diameters corresponding to the precast concrete base section and be a non load-bearing component, which is resistant to the chemical environment normally found in wastewater collection systems. The outer surface of the liner shall be coated with aggregate and/or PP pellets bonded to the outer surface and have perforated PP I-beam "bonding bridge" anchors bonded to the outer surface in order to insure adequate anchoring to concrete base sections to pass vacuum testing with 10" of negative pressure.

The inside liner surfaces shall be free of bulges, dents and other defects that result in a variation of inside diameter of more than 1/4" (7 mm) for base liner flow channel and pipe connections. The precast concrete pipe penetration joint surfaces shall be free of excess concrete at external and internal surfaces to insure a proper seal between the pipe connection and the liner.

The manhole base liner shall include full flow channels with side-walls to the crown of the pipe. The inner surface of the bench shall be provided with an anti-skid pattern. Watertight gasketed pipe bell connections to suit specific pipe types, grade and alignment, shall be monolithically attached to the base liners and shall extend to the outside profile of the precast

Provided to Builders Exchange of WA, Inc. For usage Conditions Agreement see www.bxwa.com - Always Verify Scale

concrete structure.

If PP base liner is utilized, a minimum slope of 0.06' is acceptable across the invert channel. The FRP base liner shall require the District standard minimum slope of 0.1' across the invert channel.

Base liner properties shall be in accordance with the following:

MATERIALS

Polypropylene (PP):	100% Copolymer
Minimum thickness:	5mm
Hardness:	75 Shore D
Density:	56.8 lb/ft^3 (0.91 g/cm^3)
Colour:	Dull mustard/goldenrod
Fiberglass Reinforced Plastic (FRP):	Polyurethane Hybrid Composite
Glass fiber:	Type E, min fiber length of 0.625" (16mm), 10 - 12% content by weight
Inert filler:	10 - 13% content by weight
Minimum thickness:	5mm
Hardness:	85 Shore D
Density:	73.0 lb/ft^3 (1.17 g/cm^3)
Colour:	Dull mustard/goldenrod
Aggregate bonding medium:	Processed sand containing crushed & uncrushed dry and cleaned semi-round particles in the 0.08 - 0.12" (2 - 3mm) size range
Gaskets:	Polyisoprene, unless otherwise specified
Hardness:	50 - 55 Shore A

PHYSICAL PROPERTIES

Abrasion resistance to falling sand (ASTM D968):

Thickness of material removed by passes

Passes	0-5	5-10	10-15	15-20	20-25	Total for 25 passes
Thickness removed	0.04 mil	0.04 mil	0.6 mil	0.04 mil	0.12 mil	1.20 mil

Provided to Builders Exchange of WA, Inc. For usage Conditions Agreement see www.bxwa.com - Always Verify Scale

Percolation Test:	Water absorption of top surface - 0.032%
Thermal shock (CSA-B45-M93):	100 thermal cycles - no sign of surface defects

Chemical Resistance (ASTM D1308):

Selected Reagents

Reagent	Result
Nitric Acid 69%	No surface Degradation - Surface Staining
Hydrochloric Acid 60%	No surface Degradation
Ammonia 28%	No surface Degradation
Sodium Hydroxide 5.25%	No surface Degradation
Sulfuric Acid 50%	No surface Degradation
Sulfuric Acid 70%	No surface Degradation
Sulfuric Acid 80%	No surface Degradation
Acetone	No surface Degradation
Unleaded Gasoline	No surface Degradation
Turpentine	No surface Degradation
Acetone Immersion (ASTM D2152)	No Attack

Base liners shall be manufactured and supplied by Predl Systems North America of Burnaby, B.C.

(c) MANHOLE STEPS

Manhole steps shall be made of ½" Grade 60 Steel reinforcing bars coated with copolymer polypropylene, equal to Lane International Manhole step N0. P-14850.

The steps shall be installed at the manhole manufacturers yard in conformance with the step manufacturer requirements. At a minimum, the step ends shall be coated with non-shrink epoxy grout and driven into pre-drilled holes with dimensions of 1" inch diameter and 3-1/2" depth. The pre-drilled holes shall not penetrate the exterior manhole wall.

(d) GRADE ADJUSTMENT

The depth of the 24" diameter manhole neck from the top of the frame to the top of the cone shall be from between 14" and 26".

Provided to Builders Exchange of WA, Inc. For usage Conditions Agreement see www.bxwa.com - Always Verify Scale

(e) CHANNELS

All new manholes shall be provided with fiberglass reinforced plastic base liners per Subsection 4.2.B of these specifications, unless otherwise indicated on the plans or approved by the District. Manholes approved for cement concrete channels shall conform to this subsection of the specifications.

Channels shall be made to conform accurately to the sewer grade and shall be brought together smoothly with well-rounded junctions, subject to approval by the District.

Channels shall consist of commercial grade concrete, minimum Class 3000 in accordance with Section 6-02 of the 2010 Standard Specifications for Road, Bridge and Municipal Construction of the Washington State Department of Transportation.

The channels shall be field poured after the inlet and outlet pipes have been laid and firmly grouted into place at the proper elevation. Allowances shall be made for a minimum of one-tenth foot (0.1') drop in elevation across the manhole in the direction of flow. The maximum allowable drop in inlet elevation across the manhole in the direction of flow shall be 0.5 ft. Channel sides shall be carried up vertically from the invert to three-quarters of the diameter of the various pipes. The concrete bench shall be warped evenly and sloped two percent (2%) to drain. Rough, uneven surfaces will not be permitted. Channels shall be constructed to allow the installation and use of a mechanical plug of the appropriate size.

(f) PIPE CONNECTIONS

All pipe entering or leaving the manhole shall be placed on firmly compacted bedding. Special care shall be taken to see that the openings through which pipes enter the structure are completely and firmly filled with mortar from the outside to insure watertightness. All PVC pipe connections to manholes shall be made with GPK PVC Manhole Adapters (also known as “sand collars”) with an external abrasive silica layer or Kor-N-Seal Connector manufactured by NPC. Inc.

All stubbed out sewer pipes placed through manhole walls for future connections shall be suitably plugged and blocked in a manner acceptable to the District.

Provided to Builders Exchange of WA, Inc. For usage Conditions Agreement see www.bxwa.com - Always Verify Scale

(g) SHELF REPAIRS

Shelf repairs at connections to the existing manholes shall be class 3000 commercial grade cement in accordance with the Engineering Specifications.

(h) GROUT

Grout for all uses including, but not limited to, manhole channels, shelves, pick-holes, and adjusting rings, shall be cement based, nonshrink, noncorrrosive, and nonmetallic grout conforming to ASTM C 1107, Grade C. Grout shall be Dayton 1107 Advantage Grout as provided by Dayton Superior Corporation, Oregon, IL., or approved equal. The District may sample and test grout to determine conformance with the specifications.

(i) DROP MANHOLES

Drop manholes shall, in all respects, be constructed as a standard manhole with the exception of the drop connection as shown on the Standard Detail.

(j) LIFT HOLES

All lift holes shall be completely filled smooth with grout both inside and out in order to insure water-tightness.

(k) MANHOLE CERTIFICATION

The Contractor shall provide written certification from the manhole manufacturer that the manholes provided meet or exceed the specifications and that the materials used in the construction of the manhole are in accordance with the specifications. A Manufacturer's Certificate of Compliance shall be provided for each manhole delivered to the project and shall include the manufacturer's name and address, the District's manhole number, reference to the applicable project specifications being used, the design mix and 28-day strength of the cement concrete used, drawings indicating reinforcing steel details, such as size and location, results of materials testing conducted by the manufacturer and the signature of a responsible corporate official of the manufacturer.

The District may test manholes and materials used at any time, including after installation, and any manhole not conforming to the specifications shall be rejected by the District and replaced with a conforming manhole provided and installed by the Contractor.

Provided to Builders Exchange of WA, Inc. For usage Conditions Agreement see www.bxwa.com - Always Verify Scale

4. MANHOLE AND CLEANOUT FRAME AND COVERS

Frames and covers shall be cast iron and conform to the Standard Details and these specifications. Castings shall conform to the requirements of ASTM A-48, Class 30 and shall be free of porosity, shrink cavities, cold shuts or cracks, or any surface defects that would impair serviceability. Repair of defects by welding, or by the use of smooth-on or similar material, will not be permitted. Frames and covers shall be machine-finished or ground on seating surfaces so as to assure non-rocking fit in any position and interchangeability of covers.

All manhole frames and covers will be locking type. Manhole frame and cover shall be equal to Olympic Foundry Part No. MH30 modified to have 1 each 7/8" diameter lift-hole or East Jordan Iron Works Locking Frame Part No. 370512, and Locking Cover Part No. 370523.

Watertight manhole frame and cover shall be equal to Olympic Foundry Part No. MH30AW/T or East Jordan Iron Works Watertight Cover Part No. 370586.

Cleanout frame and cover shall be locking type equal to Armorcast 12”x12”x12” RPM Box Assembly with Pentahead locking bolt style and “CO” imprinted on cover, part number A6001423A (see NUD Standard Sewer Detail #9).

5. WATER MAIN PIPE AND APPURTENANCES

(a) DUCTILE IRON WATER PIPE

Ductile iron pipe shall be new, Class 52, cement-lined, conforming to AWWA C151.

Ductile iron pipe shall be push-on joint or mechanical joint. Pipe with push-on joints shall be furnished with a single rubber ring gasket. All gaskets, including MJ, shall be lubricated to effect the seal. Pipe with mechanical joints shall be furnished with a mechanical joint of the stuffing box type, including rubber gasket, iron gland, and high strength tee-head bolts and nuts to effect the seal.

Restrained joint pipe shall be push-on joint pipe with U.S. Pipe “TR Flex” or U.S. Pipe “Field Lok” gaskets, or equal.

Each length of pipe shall be clearly marked with the manufactures identification, year, thickness, class of pipe and weight.

The Contractor shall furnish certification from the manufacturer of the pipe and gasket being supplied that the inspection and all of the specified tests have been made and the results thereof comply with the requirements of this standard.

Provided to Builders Exchange of WA, Inc. For usage Conditions Agreement see www.bxwa.com - Always Verify Scale

(b) GALVANIZED IRON WATER PIPE AND FITTINGS

Galvanized iron pipe where specified for use shall be Schedule 40 hot dipped, zinc-coated (galvanized) welded and seamless steel pipe for ordinary uses (ASTM A-120). Fittings shall be screwed malleable iron galvanized per USA Standard B16.3.

(c) POLYETHYLENE PLASTIC SERVICE PIPE

Service pipe shall be PE3408 high density polyethylene, SIDR 7 iron pipe size with a 200 psi pressure rating. The pipe shall conform to ASTM D2239 and AWWA C901. At a minimum the pipe pressure rating, SIDR and ASTM classification shall be clearly printed on the pipe.

(d) POLYETHYLENE PIPE ENCASEMENT

Ductile iron pipe shall be encased with polyethylene encasement (8 mil thickness). Material and installation shall be in accordance with AWWA C105. Installation shall be in accordance with AWWA C105, Method A or Method C.

(e) DUCTILE IRON FITTINGS

Ductile iron fittings shall be short body with a 350 psi pressure rating for mechanical joint fittings and 250 psi for flanged fittings. All fittings shall be cement lined and shall be in conformance with AWWA C153 for mechanical joint fittings and AWWA C110 for flanged fittings.

Where restrained joints are required, fittings shall be mechanical joint with a restraint device equal to EBAA Iron, Inc. “Mega-Lug”.

All deactivated water mains shall be capped with Romac EC501 End Cap Coupling or equal.

(f) FIRE HYDRANTS

Fire hydrants shall conform to AWWA Standard Specification C502 and be one of the following types:

- Mueller Super Centurion
- American Darling B-62-B
- Clow Medallion
- M & H 929
- AVK Nostalgic

They shall be a rising stem compression-type which opens counterclockwise, and closes with the pressure. The minimum main valve

Provided to Builders Exchange of WA, Inc. For usage Conditions Agreement see www.bxwa.com - Always Verify Scale

opening diameter shall be 5-1/4" unless otherwise specified. The hydrant seat and hydrant seat retaining ring shall be bronze. All external bolts, nuts and studs shall be cadmium plated in accordance with ASTM A165 Type HS or rust proofed by some other process approved by the District. Gaskets shall be of rubber composition.

Fire hydrants shall be equipped with one 5" pumper connection (Seattle Standard Thread) with Storz Adapter as required by those jurisdictions shown on the Standard Details. The hydrant shall include two 2-1/2" NST hose ports. Pentagon nuts or caps and operating stem shall measure 1-1/4" point to flat and shall open by turning to the left. Nozzle shall be fitted with renewable bronze nipples locked in place.

Fire hydrants shall be set plumb and ports shall to be oriented as directed by the Fire Protection District having jurisdiction over said area.

Fire hydrant piping from the main line valve to the hydrant base shall be restrained joint pipe or shall be restrained with stainless steel shackle rods and nuts.

The hydrants shall be coated with enamel paint in accordance with the Standard Details.

See the Standard Detail for additional requirements.

(g) GATE VALVES

Gate valves shall be ductile iron body valves with resilient wedge conforming to the latest revision of AWWA Standard C515 and shall be NSF 61 approved. Valves shall have epoxy coating fusion bonded to all internal and external surfaces of the valve body and bonnet in compliance with AWWA C550. The wedge shall be fully encapsulated in rubber. The valves shall be non-rising stem, open to the left, equipped with standard 2" square operating nuts and O-ring seals at all joints. Resilient wedge gate valves shall be American Flow Control Series 2500, Clow model 2638, Mueller 2360 series, Kennedy 7000 series, AVK Series 45, or M&H Style 7000.

(h) BUTTERFLY VALVES

Butterfly valves shall be ductile iron body of the tight closing rubber seat type with rubber seat either bonded to the body or mechanically retained in the body with no fasteners or retaining hardware in the flow stream. The valves shall be epoxy coated inside and outside. The valves shall meet the full requirements of AWWA C504, class 150 B, except the valves shall be able to withstand 200 psi differential pressure without leakage. The valves shall be equal to Pratt "Groundhog" or Mueller Lineseal III.

Provided to Builders Exchange of WA, Inc. For usage Conditions Agreement see www.bxwa.com - Always Verify Scale

Butterfly valves to be installed underground shall have sealed mechanical operators and 2" standard square operating nuts. Complete manufacturer's Specifications for the valves proposed for use shall be submitted to the District for approval.

(i) VALVE BOXES

Valve boxes shall be two-piece, cast iron, Olympic Foundry #045 or approved equal.

(j) FIRE HYDRANT GUARD POSTS

Concrete fire hydrant guard posts, if required as directed by the District, shall be made of precast reinforced concrete, nine (9) inches in diameter, six (6) feet long, or 8"x6"x6 feet long. The guard posts shall be coated white with enamel paint in accordance with the Fire Hydrant Assembly Standard Detail.

(k) METER BOXES

The meter boxes shall be according to the Standard Details.

(l) SERVICE SADDLES

Direct tapping of 1" standard corporation stop threaded tap for ductile iron class 52 or greater class pipe will be allowed. Other service taps shall be as follows:

(i) Ductile Iron Pipe, Less Than Class 52, Cast Iron and Asbestos Cement (AC) Pipe:

Service saddles for 1" standard corporation stop threaded tap, shall be single strap and shall be equal to Mueller Company DR1S, Ford Meter Box Company FC101, or Romac Industries, Inc. 101NS.

Service saddles for 1-1/2" and 2" standard corporation stop threaded tap shall be double strap and shall be equal to Mueller Company DR2S, Ford Meter Box Company FC202, or Romac Industries, Inc. 202NS.

(ii) PVC pipe:

Service saddles shall be used on all PVC pipe. For 1" standard corporation stop threaded tap, saddle shall be single stainless steel strap and shall be equal to Ford S 90. Service saddles for 1-1/2" or 2"

Provided to Builders Exchange of WA, Inc. For usage Conditions Agreement see www.bxwa.com - Always Verify Scale

standard corporation stop threaded tap shall be double stainless steel strap and shall be equal to Romac Industries, Inc., Style 202S.

(m) SERVICE MATERIALS

Service materials including valves, pipe and fittings be as specified on the Standard Details. All brass appurtenances shall be "lead free" and conform to NSF/ANSI 372 and NSF/ANSI 61 standards. 2" ball valves shall be furnished with a slotted operator, and with an adapting 2"-square operating nut (Ford Cat. QT-67) secured with a stainless steel cotter pin.

(n) RESIDENTIAL DOMESTIC AND FIRE SPRINKLER SERVICES

Combination service for residential domestic and fire sprinkler systems shall be according to the Standard Detail.

(o) BLOW-OFFS AND AIR & VACUUM RELIEF VALVES

2" Blow-offs and 1" Air & Vacuum Relief Valves shall be installed for 12" diameter pipe and smaller in accordance with the standard detail. Blow-offs for pipe larger than 12" in diameter shall be as directed by the District.

(p) STAINLESS STEEL TAPPING SLEEVE

Tapping sleeve shall be constructed of all stainless steel. Gaskets shall provide a full circumferential seal. Tapping sleeve shall be Romac STS 420 Tapping Sleeve, JCM 432 All Stainless Steel Tapping Sleeve or approved equal.

6. STEEL CASING

Steel casing pipe shall meet ASTM A-53, having a minimum tensile strength of 60,000 psi and a minimum yield strength of 35,000 psi. Wall thickness shall be sufficient to withstand jacking forces without deformation, with minimum wall thickness of 0.375 inches for casing pipe diameters up to 22". For casing pipe diameters larger than 22", please see the table at the end of this subsection. All joints shall be welded. All field-welded joints shall comply with AWS Code for procedures of manual shielded metal arc welding.

The carrier pipe shall be installed with casing spacers. Spacers shall be placed in accordance with the Methods of Construction and shall be at least 12-inches wide. Spacers shall be designed to provide a maximum space of 1-inch between the upper runners and the inside of the steel casing. The spacers shall prevent the pipe bells from touching the inside of the casing. Metal components of casing spacers shall be Type 304 (18-8) 14-gauge (minimum) stainless steel. The liner

Provided to Builders Exchange of WA, Inc. For usage Conditions Agreement see www.bxwa.com - Always Verify Scale

shall be neoprene rubber or PVC, and the runners shall be polyethylene with a low friction factor. Casing spacers shall be designed for center restraint. Casing spacers shall be Model CCS by Cascade Waterworks manufacturing, or District approved equal.

Where casing spacers must be custom designed to account for a specific grade of the carrier pipe inside the casing, submittals must be provided which include drawings and dimensions for each of the casing spacers and the respective location of each of the spacers relative to the casing and carrier pipe.

Casing end seals shall be 1/4-inch thick synthetic rubber with two stainless steel bands and clamps. The end seal shall be Model C by Pipeline Seal and Insulator, or APS Model AL, or approved equal.

Steel Casing Pipe Wall Thickness Table	
Diameter of Casing Pipe	Minimum Thickness
22" or Less	0.3750"
Over 22" – 28"	0.4375"
Over 28" – 34"	0.5000"
Over 34" – 42"	0.5625"
Over 42" – 48"	0.6250"
Over 48"	Review Required

7. FOUNDATION, BEDDING AND BACKFILL GRAVEL FOR TRENCHES

(a) FOUNDATION GRAVELS

Foundation gravel shall consist of clean, granular material free from objectionable materials such as organic matter or other deleterious substances with at least 90 percent coarse material ranging from 1" in diameter to 3" in diameter and 100 percent 3" in diameter or less, unless otherwise specified or approved by the District.

(b) BEDDING GRAVELS

Rigid Pipe:

Bedding material for rigid pipe shall consist of imported gravel backfill, crushed rock, controlled density fill, or native material as indicated on the plans or as directed by the District. Native material, if allowed by the District, shall be sand and gravel with no material larger than 1-1/2". The

Provided to Builders Exchange of WA, Inc. For usage Conditions Agreement see www.bxwa.com - Always Verify Scale

material shall be free from wood waste, organic material, and other extraneous or objectionable materials.

Flexible Pipe:

Bedding material shall consist of clean, granular, manufactured pea gravel conforming to the following gradation:

U. S. Standard Sieve Size	% Passing by Weight
1/2"	100
3/8"	85 – 95
No. 4	5 – 15
No. 8	0 – 2

(c) TRENCH BACKFILL

Native material may be used for trench backfill if the material meets the requirements of Section 9-03.14(2) of the 2010 Standard Specifications for Road, Bridge and Municipal Construction of the Washington State Department of Transportation for Select Borrow. Native material shall be free from wood waste, organic waste, coal, charcoal, and other extraneous or objectionable materials and shall have no material larger than 2" in diameter. The material shall be non-plastic and shall not contain more than 3 percent organic material by weight.

Imported gravel backfill shall be a granular material conforming to Section 9-03.14(1) of the 2010 Standard Specifications for Road, Bridge and Municipal Construction of the Washington State Department of Transportation.

Where designated on the Contract Drawings, as required by the roadway permitting agency or as directed by the District, the trench backfill shall be controlled density fill (CDF), as manufactured by Cadman, inc., product #110021, "Pro-Flow Trench Five Hour", or District approved equal.

8. REPLACING ROAD SURFACE

(a) CRUSHED SURFACING

Crushed surfacing material shall be 1-1/4" base course and 3/4" minus top course crushed gravel and shall be manufactured from ledge rock, talus or gravel in accordance with the provisions of Section 9-03.9(3) of the 2010 Standard Specifications for Road, Bridge and Municipal Construction of the Washington State Department of Transportation.

Provided to Builders Exchange of WA, Inc. For usage Conditions Agreement see www.bxwa.com - Always Verify Scale

(b) GRAVEL BASE

All gravel base shall conform to the requirements of Section 9-03.10 of the 2010 Standard Specifications for Road, Bridge and Municipal Construction of the Washington State Department of Transportation.

(c) ASPHALT CONCRETE SURFACING

Asphalt concrete surfacing or repair shall be asphalt concrete pavement, Class "B", and shall conform to Section 5-04 of the 2010 Standard Specifications for Road, Bridge and Municipal Construction of the Washington State Department of Transportation and the Standard Specification Drawing for Permanent Asphalt Concrete Patch.

(d) CEMENT CONCRETE PAVEMENT

Cement concrete pavement shall be Class "B" in accordance with Section 5-05 of the 2010 Standard Specifications for Road, Bridge and Municipal Construction of the Washington State Department of Transportation and shall be furnished only by manufacturers who are members of the Portland Cement Association. All reinforcing steel shall conform with and be placed in accordance with Section 5-05 of the 2010 Standard Specifications for Road, Bridge and Municipal Construction of the Washington State Department of Transportation and shall conform to the requirements of ASTM Designation A-15 and A-305, latest revisions.

(e) RIGID-TYPE PAVEMENTS RESURFACED WITH ASPHALT CONCRETE

Asphalt concrete surface mat to be placed over Portland cement concrete base shall be as designated by the Washington State Department of Transportation as Class "B"; both the base and the surface mat shall be carefully prepared, placed and cured in full compliance with Section 5-04.3 of the 2010 Standard Specifications for Road, Bridge and Municipal Construction of the Washington State Department of Transportation.

9. GRASS SEEDING AND SOD

(a) TOPSOIL

Topsoil shall be Type B or C in accordance with Section 9-14.1 of the 2010 Standard Specifications for Road, Bridge and Municipal Construction of the Washington State Department of Transportation. The Contractor shall provide a topsoil material submittal to the District for review and approval prior to construction.

Provided to Builders Exchange of WA, Inc. For usage Conditions Agreement see www.bxwa.com - Always Verify Scale

(b) SEED

Seed material, storage and certification shall conform to Section 9-14.2 of the 2010 Standard Specifications for Road, Bridge and Municipal Construction of the Washington State Department of Transportation. Seed shall be "Certified" grade seed or better. The Contractor shall provide a seed mix material submittal to the District for review and approval prior to construction.

(c) FERTILIZER

Fertilizer shall be commercial grade in conformance with Section 9-14.3 of the 2010 Standard Specifications for Road, Bridge and Municipal Construction of the Washington State Department of Transportation. The Contractor shall provide a fertilizer material submittal to the District for review and approval prior to construction.

(d) MULCH

Mulch shall be approved by the District and shall be certified grass hay or straw or wood cellulose fiber for hydroseeding. Wood cellulose fiber shall be in accordance with Section 9-14.4(2) of the 2010 Standard Specifications for Road, Bridge and Municipal Construction of the Washington State Department of Transportation.

(e) SOD

The Contractor shall provide grass mixtures to the District for review and approval prior to construction.

Sod shall be field grown one year or older, have a well-developed root structure and be free of all weeds, disease and insect damage.

Prior to cutting, the sod shall be green, in an active and vigorous state of growth and mowed to a height not exceeding 1-inch.

The sod shall be cut with a minimum of 1-inch of soil adhering.

Provided to Builders Exchange of WA, Inc. For usage Conditions Agreement see www.bxwa.com - Always Verify Scale

Northshore Utility District
King County, Washington

2014 ENGINEERING SPECIFICATIONS

METHODS OF CONSTRUCTION

February, 2014

Provided to Builders Exchange of WA, Inc. For usage Conditions Agreement see www.bxwa.com - Always Verify Scale

TABLE OF CONTENTS

SECTION 5

ENGINEERING SPECIFICATIONS
Methods of Construction

1. GENERAL 1
2. CLEARING AND GRUBBING 1
3. DEWATERING AND CONTROL OF WATER 2
4. TEMPORARY EROSION & SEDIMENTATION CONTROL (TESC) 3
5. SEWER PIPE INSTALLATION 5
6. SIDE SEWER STUBS 6
7. TESTING GRAVITY SEWERS 7
8. TESTING SANITARY SEWER FORCE MAINS 11
9. MANHOLE VACUUM TESTING 12
10. LAYING DUCTILE IRON WATER MAIN 12
11. GALVANIZED IRON PIPE 13
12. CONCRETE BLOCKING 13
13. FIRE HYDRANT INSTALLATION 14
14. GUARD POST INSTALLATION 14
15. GATE VALVE AND BUTTERFLY VALVE INSTALLATION 14
16. VALVE BOX INSTALLATION 14
17. AIR AND VACUUM RELIEF VALVE INSTALLATION 15
18. 2-INCH BLOW-OFF INSTALLATION 15
19. LOCATING WIRE 15
20. WATER SERVICE INSTALLATION 15
21. HYDROSTATIC TESTS 15
22. STERILIZATION AND FLUSHING OF WATER MAIN 16
23. CONNECTION TO EXISTING WATER MAIN 19
24. STEEL CASING 19
25. EXCAVATION AND BACKFILL FOR UTILITY CONSTRUCTION 20
26. COMPACTION OF TRENCH BACKFILL 22
27. REPLACING ROAD SURFACE 23

Provided to Builders Exchange of WA, Inc. For usage Conditions Agreement see www.bxwa.com - Always Verify Scale

28. ADJUSTMENT OF NEW AND EXISTING UTILITY STRUCTURES TO GRADE 26
29. HAZARD OF ASBESTOS CEMENT PIPE REMOVAL 27
30. RIGHT-OF-WAY MONUMENTS AND LOT MARKERS 27
31. RE-DESIGN OF LINES 28
32. GRASS SEEDING AND SOD 28
33. FINISHING AND CLEANUP 29

Provided to Builders Exchange of WA, Inc. For usage Conditions Agreement see www.bxwa.com - Always Verify Scale

Section 5 – Engineering Specifications Methods of Construction

1. GENERAL

A pre-construction conference will be held at the District office prior to the start of construction.

The Contractor shall notify the District a minimum of 5 days in advance of contemplated construction to allow for construction staking and review of materials to be used on the job.

Except as otherwise noted herein, all work shall be accomplished with adopted standards and specifications of Northshore Utility District and according to the recommendations of the manufacturer of the material or equipment used. The Contractor shall have a copy of the plans and specifications on the jobsite at all times.

2. CLEARING AND GRUBBING

Clearing and grubbing shall consist of the removal of all trees, stumps, brush and debris and shall be confined within the limits of the easements obtained for the construction of this project and/or existing public rights-of-way. Removal of clearing and grubbing debris shall be subject to the approval of the District and shall, in no way, constitute a hazard to the continuous operation of any existing utilities. Any damage to the existing utilities shall be repaired by the respective utility company, at the expense of the Contractor.

Within the limits described, all growth and organic matter such as trees, shrubs, brush, logs, fences, upturned stumps and roots of down trees and other similar items, shall be removed and disposed. All trees shall be felled within the area to be cleared. Where the tree limb structure interferes with utility wires or where the trees to be felled are in close proximity to utility wires, the tree shall be taken down in sections to eliminate the possibility of damage to the utility. Any damage that does occur shall be the responsibility of the Contractor.

All fences adjoining any excavation or embankment that may be damaged or buried shall be carefully removed and temporarily erected on the adjoining property or stored for reinstallation as directed by the District.

No debris of any kind shall be deposited in any stream or body of water or in any street or alley.

Provided to Builders Exchange of WA, Inc. For usage Conditions Agreement see www.bxwa.com - Always Verify Scale

Trees, shrubbery, and flower beds designated by the District shall be left in place and care shall be taken by the Contractor not to damage or injure such trees, shrubbery or flower beds by any of its operations.

The refuse resulting from the clearing operation shall be hauled to an approved waste site secured by the Contractor and shall be disposed of in such a manner as to meet all requirements of State, County and municipal regulations regarding health, safety and public welfare.

NO burning is allowed.

In no case, shall any material be left on the project, shoved onto abutting private properties, or be buried in embankments or sewer trenches on the project.

Where trees exist in planting areas and are not to be removed, it shall be the Contractor's responsibility to trim low limbs which will interfere with the normal operation of its equipment and paint or seal pruned areas with an approved pruning tar or paint. The trimming shall be performed in a professional manner by competent personnel prior to its machine operations and in such a manner as the District and/or the property owner may direct.

The Contractor shall be responsible for all damages to existing improvements resulting from its operations.

3. DEWATERING AND CONTROL OF WATER

The Contractor shall dewater and dispose of the water so as not to cause injury to public or private property or to cause a nuisance or a menace to the public and shall meet all regulatory agency requirements.

The control of groundwater shall be such that softening of the bottom of excavations or formation of "quick" conditions or "boils" shall be prevented. Dewatering systems shall be designed and operated so as to prevent the removal of the natural soils.

During excavating, installing, placing of trench backfill and the placing and setting of concrete, excavations shall be kept free of water. The static water level shall be drawn down below the bottom of the excavation so as to maintain the undisturbed state of the natural soils and allow the placement of backfill to the required density. The dewatering system shall be installed and operated so that the ground water level outside the excavation is not reduced to the extent that would damage or endanger adjacent structures or property.

The release of groundwater to its static level shall be performed in such a manner as to maintain the undisturbed state of the natural foundation soils,

Provided to Builders Exchange of WA, Inc. For usage Conditions Agreement see www.bxwa.com - Always Verify Scale

prevent disturbance of compacted backfill and prevent flotation or movement of structures, pipelines.

In carrying out the work within the limits of streams or an area that will drain into a stream, the Contractor is required to comply with the regulations of the appropriate local, State and Federal agencies.

The Contractor shall contact the above referenced departments and secure such permits as may be necessary to cover its proposed method of operation within the areas described above. If no permit is necessary and, if requested by the District, the Contractor shall provide written approval from the appropriate agency.

4. TEMPORARY EROSION & SEDIMENTATION CONTROL (TESC)

The Contractor shall comply with all applicable permit conditions and recommendations of the geotechnical report, if available.

The detrimental effects of erosion and sedimentation are to be minimized in conformance with the following general principles:

- § Leaving soil exposed for the shortest possible time.
- § Reducing the velocity and controlling the flow of runoff.
- § Detaining runoff in an approved on-site temporary sedimentation control facility to trap sediment.
- § Releasing runoff safely to downstream areas.
- § Installing temporary filter fabric fence.
- § Protecting existing catch basins.

In applying these principles, the Contractor shall provide for erosion control by conducting work in workable units; minimizing the disturbance to cover crop material, providing mulch and/or temporary cover crops, sedimentation basins, and/or diversions in critical areas during construction; properly controlling and conveying runoff; and establishing permanent vegetation and installing erosion control structures as soon as possible.

(a) TEMPORARY EROSION & SEDIMENTATION CONTROL (TESC)

The Contractor shall provide, install and maintain TESC facilities to protect the existing surface waters, drainage systems and adjacent properties.

The TESC facilities must be constructed prior to the start of construction to ensure that the transport of sediment to surface waters, drainage systems and adjacent properties is minimized.

Provided to Builders Exchange of WA, Inc. For usage Conditions Agreement see www.bxwa.com - Always Verify Scale

The TESC facilities shown on the plan are the minimum requirements for anticipated site conditions. During the construction periods, these TESC facilities shall be upgraded as needed for unexpected storm events and modified to account for changing site conditions (e.g., additional sump pumps, relocation of ditches and silt fences, etc.).

The TESC facilities shall be inspected daily by the contractor/TESC supervisor and maintained to ensure proper functioning. Written records shall be kept of weekly reviews of the TESC facilities during the wet season (Oct. 1 to March 31) and of monthly reviews during the dry season (April 1 to Sept. 30).

Any areas of exposed soils, including roadway embankments, that will not be disturbed for two days during the wet season or seven days during the dry season shall be immediately stabilized with the approved TESC methods (e.g., seeding, mulching, plastic covering, etc.).

The TESC facilities shall be inspected and maintained within 24 hours following a storm event.

At no time shall more than one (1) foot of sediment be allowed to accumulate within a catch basin. All catch basins and conveyance lines shall be cleaned prior to paving. The cleaning operation shall not flush sediment-laden water into the downstream system.

(b) TRENCH MULCHING

Where, in the opinion of the District, there is danger of backfill material being washed away due to steepness of the slope along the direction of the trench, material shall be held in place by covering the disturbed area with straw and holding it in place with a covering of jute matting or wire mesh anchored down with wooden stakes, or as directed by the District.

(c) COVER CROP SEEDING

A cover crop shall be in place in all areas excavated or disturbed during construction that were not paved, landscaped, and/or covered prior to construction. Areas landscaped prior to construction shall be restored to their prior condition in accordance with Landscaping, Lawn Removal and Replacement sections. The Contractor shall be responsible for protecting all areas from erosion until the cover in place affords such protection.

Cover-crop seeding shall follow backfilling operations.

The Contractor shall be responsible for protecting all areas from erosion until the cover crop affords such protection. The cover crop shall be reseeded, if required, and additional measures taken to provide protection from erosion until the cover crop is capable of providing protection.

Provided to Builders Exchange of WA, Inc. For usage Conditions Agreement see www.bxwa.com - Always Verify Scale

During winter months, the Contractor may postpone seeding at the direction of the District, if conditions are such that the seed will not germinate and grow. The Contractor will not, however, be relieved of the responsibility of protecting all areas until the cover crop has been sown and affords protection from erosion.

Submittals shall be provided for cover crop seed, mulch and fertilizer as specified herein.

5. SEWER PIPE INSTALLATION

Unless specified otherwise, a 10-foot horizontal separation and an 18-inch vertical separation must be maintained between all sanitary sewer mains and water mains in accordance with the Department of Ecology criteria.

Where it is necessary to cross an existing asbestos-cement water line, the asbestos-cement pipe shall be removed and replaced with ductile iron pipe in accordance with the Standard Detail. All other non-metallic water main crossings shall be backfilled with CDF per NUD Standard Sewer Details.

(a) CONNECT TO EXISTING SYSTEM

Connections to existing manholes shall be made by core-drilling. Invert of manhole shall be rechannelized as necessary to accommodate flow directions and provide a minimum of 0.10' drop from the inlet to the outlet. Connections shall be watertight. If connection is made to an existing manhole with a fiberglass reinforced plastic baseliner, the disturbed channel must be re-glassed by a District approved contractor.

(b) PLUG(S) FOR EXISTING SYSTEM

The District will furnish and install a plug at the time the project is connected to the District's sewer system. The plug(s) must remain in position to prevent debris and water from entering the existing sewer system until such time as the sewer system within the project has been accepted by the District for maintenance and operation. A $2,000.00 fine will be levied against the Contractor when a District installed sewer mainline plug is removed at any time during the work. The Contractor will also be accountable for all expenses incurred to clean and flush sanitary sewer mainlines as a result of said plug removal.

(c) PIPE LAYING

The sewer pipe, unless otherwise approved by the District, shall be installed upgrade from point of connection on the existing sewer or from a designated starting point to line and grade per approved plans. The sewer

Provided to Builders Exchange of WA, Inc. For usage Conditions Agreement see www.bxwa.com - Always Verify Scale

pipe shall be installed with the bell end forward or upgrade. When pipe laying is not in progress, the forward end of the pipe shall be kept tightly closed with an approved temporary plug.

(d) Pipe Jointing

All extensions, additions and revisions on the sewer system, unless otherwise indicated, shall be made with sewer pipe joined by means of a flexible gasket which shall be fabricated and installed in accordance with these specifications.

All joints shall be made up in strict compliance with the manufacturer's directions and all sewer pipe manufacture and handling shall meet or exceed the ASTM recommended specifications, current revisions.

Pipe handling after the gasket has been affixed shall be carefully controlled to avoid disturbing the gasket and knocking it out of position or loading it with dirt or other foreign material. Any gaskets so disturbed shall be removed, cleaned, re-lubricated, if required, and replaced before the re-joining is attempted.

Care shall be taken to properly align the pipe before joints are entirely forced home. During insertion of the tongue or spigot, the pipe shall be partially supported by hand, sling or crane to minimize unequal lateral pressure on the gasket and to maintain concentricity until the gasket is properly positioned.

Sufficient pressure shall be applied in making the joint to assure that it is home, as described in the installation instructions provided by the pipe manufacturer.

6. SIDE SEWER STUBS

A side sewer stub is considered to be that portion of a sewer line that will be constructed between a main sewer line and a property line or easement limit.

All applicable specifications given herein for sewer construction shall be held to apply to side sewer stubs.

3" wide, green metallic side sewer detector tape shall be laid 12" above the pipe, for the entire length of the side sewer which is 8’ deep or less continuing up the side sewer 2”x4” marker post. Identification on the tape shall include the words "Sanitary Sewer".

Provided to Builders Exchange of WA, Inc. For usage Conditions Agreement see www.bxwa.com - Always Verify Scale

Side sewers shall be single and installed according to the Standard Details. In no case may the specified side sewers be changed without the approval of the District.

Side sewers shall be connected to the tee provided in the sewer main where such is available utilizing approved fittings or adapters. The side sewer slope shall be a maximum of 100 percent (45°) and a minimum of 2 percent.

The maximum bend permissible at any one fitting shall not exceed 45°. Bends exceeding 45° with any combination of two fittings shall have a straight pipe of not less than three (3) feet in length installed between such adjacent fittings, unless one of such fittings be a wye branch with a cleanout provided on the straight leg. The maximum length of 6 inch sewer stub shall be 100 feet; minimum length shall be 5 feet unless otherwise approved by the District.

Where there are no basements, the minimum side sewer depth shall be six (6) feet below final ground at the property line. The Contractor shall provide for each 6-inch stub a 2-inch x 4-inch wooden post that extends from the invert of the 6-inch stub to a point 18 inches (minimum) and 2 feet (maximum) above the existing ground. The exposed area of this post shall be painted white and shall have marked thereon the letters S/S. The elevations of the side sewer connections shall be of sufficient depth to serve all existing and possible future structures.

Rigid Pipe:

Where no tee is provided or available at the sewer main, connection shall be made by machine-made tap and suitable saddle, or otherwise as approved by the District Engineer.

Flexible Pipe:

Where no tee is provided or available at the sewer main, a cut-in tee shall be installed with two (2) PVC couplings as approved by the District Engineer.

7. TESTING GRAVITY SEWERS

Before sewer lines are accepted, all lines shall be inspected for line and grade, air tightness, deflection and television inspection. Any corrections required shall be made at the expense of the Contractor.

The first section of pipe not less than 300' in length installed by each crew shall be tested, in order to qualify the crew and/or the material. A successful installation of this first section shall be a prerequisite to further pipe installation by the crew. At the Contractor's option, crew and/or material qualification testing

Provided to Builders Exchange of WA, Inc. For usage Conditions Agreement see www.bxwa.com - Always Verify Scale

may be performed at any time during the construction process after at least three feet of backfill has been placed over the pipe.

(a) PREPARATION FOR TESTING

Prior to testing the Contractor shall clean and flush all sewer lines.

The Contractor shall conduct preliminary tests to confirm that the section to be tested is in an acceptable condition before requesting the District to witness the test. The manner and time of testing shall be subject to approval of the District.

(b) LINE AND GRADE

Variance from established line and grade shall not be greater than one thirty-second (1/32) of an inch per inch of pipe diameter and not to exceed one-half (1/2) inch, provided that such variation does not result in a level or reverse sloping invert; provided, also, that variation in the invert elevation between adjoining ends of pipe, due to non-concentricity of joining surface and pipe interior surfaces, does not exceed one sixty-fourth (1/64) of an inch per inch of pipe diameter, or one-half (1/2) inch maximum.

(c) LOW PRESSURE AIR TEST

Gravity sewers shall be tested with low pressure air, by the pressure drop method in accordance with Section 7-17.3(2)F, *Low Pressure Air Test for Sanitary Sewers Constructed of Non Air-Permeable Materials*, of the 2010 Standard Specifications for Road, Bridge and Municipal Construction of the Washington State Department of Transportation. The Contractor shall furnish all facilities and personnel for conducting the air test under the supervision of the District. The Contractor may desire to make an air test prior to backfilling for its own purposes. However, the acceptance air test shall be made after backfilling has been completed and compacted.

All wyes, tees or the end of the side sewer stubs shall be plugged with flexible joint caps, or acceptable alternative, securely fastened to withstand the internal test pressures. Such plugs or caps shall be readily removable and their removal shall provide a socket suitable for making a flexible, jointed lateral connection or extension. No double plugs shall be allowed.

Immediately following the pipe cleaning, the pipe installation shall be tested with low pressure air. A maximum reach to be tested shall be the reach between two consecutive manholes. Air shall be slowly supplied to the plugged pipe installation until the internal air pressure reaches 4.0 pounds per square inch greater than the average back pressure of any groundwater above the center of the pipe being tested. At least two

Provided to Builders Exchange of WA, Inc. For usage Conditions Agreement see www.bxwa.com - Always Verify Scale

minutes shall be allowed for temperature stabilization before proceeding further.

The requirements of this specification shall be considered satisfied if the time required in seconds for the pressure to decrease from 3.5 to 2.5 lbs. per square inch greater than the average back pressure of any groundwater that may submerge the pipe is not less than the listed values shown in the following table:

Allowable Time for Pressure Drop Method

Diameter (inches)	Minimum Test Times for Length of Main (seconds)							
	50'	**100'**	**150'**	**200'**	**250'**	**300'**	**350'**	**400'**
8	144	286	428	570	712	854	908	908
10	222	444	666	888	1110	1134	1134	1134
12	320	640	960	1280	1360	1360	1360	1462
15	500	1000	1500	1700	1700	1714	1998	2284
18	720	1440	2040	2040	2056	2468	2878	3290
24	1280	2558	2720	2924	3654	4386	5116	5846

According to the following:

$T = 4*K$, *for* $C < 1$

$T = 4*(K/C)$, *for* $1 \leq C < 1.75$

$T = 4*(K/1.75)$, *for* $C \geq 1.75$

Where: $C = 0.0003918*d*L$

$K = 0.0111*d^2*L$

d = *Pipe diameter (inches)*

L = *Pipe length (feet)*

T = *Minimum test time (seconds)*

Note: All test times in the above table are rounded up to the nearest even number.

The use of air pressure for testing sewer lines creates hazards that must be recognized. The Contractor shall be certain that all plugs are securely blocked to prevent blowouts. The air testing apparatus shall be equipped with a pressure release device such as a rupture disc or a pressure relief valve designed to relieve pressure in the pipe under test at greater than 6 lbs. per square inch.

Precautions shall be taken to prevent any damage caused by testing. Any damage resulting shall be repaired by the Contractor at its own expense.

Provided to Builders Exchange of WA, Inc. For usage Conditions Agreement see www.bxwa.com - Always Verify Scale

All visible leaks showing flowing water in pipelines or manholes shall be stopped even if the test results fall within the allowable leakage.

(d) DEFLECTION TESTING

If required by the District, all PVC sewer pipes shall be tested for deflection not less than 30 days after the trench backfilled and compacted has been completed. The testing shall be conducted by pulling a properly sized mandrel through the pipe in accordance with Section 7-17.3(2)G of the 2010 Standard Specifications for Road, Bridge and Municipal Construction of the Washington State Department of Transportation.

(e) TELEVISION INSPECTION

All sanitary sewers shall be inspected by the use of a Closed Circuit Television (CCTV) camera and footage provided to the District on DVD in MPEG1 format before final acceptance of the project. No VHS tapes will be accepted.

At the beginning of each sewer main inspection, the following information shall be electronically generated and displayed on the CCTV footage:

1. Date of inspection
2. Contractor Company Name
3. Operator Name
4. Upstream Manhole number to downstream manhole number
5. Direction of inspection (upstream or downstream)
6. Pipe material and size

During inspections, the following information shall be electronically generated, automatically updated, and displayed on the CCTV footage:

1. Inspection location in the sewer line in feet from adjusted zero
2. Manhole number to manhole number (with direction of travel US/DS)
3. Date of inspection
4. Elapsed time of inspection

Each individual sewer main inspection, from manhole-to-manhole, shall be recorded on one digital file. If a pipe reach cannot be recorded to a single digital file due to extreme pipe length or obstructions in the pipe, multiple digital files for a single pipe are acceptable. On the other hand, multiple sewer main inspections recorded on a single digital file shall not be accepted.

For District projects, the District will complete the initial or first CCTV inspection. Subsequent inspections required will be at the Contractor's expense.

Provided to Builders Exchange of WA, Inc. For usage Conditions Agreement see www.bxwa.com - Always Verify Scale

For private development projects, all CCTV inspections shall be furnished by the Contractor.

This CCTV inspection will be performed prior to final restoration of the street or easement. The Contractor shall inform the District ahead of time when and which lines are ready to be inspected.

The Contractor shall bear all costs incurred in correcting any deficiencies found during the CCTV inspection including the cost of any additional CCTV inspection that may be required by the District to verify the correction of said deficiency.

The project will not be accepted by the District until the CCTV inspection has been performed.

8. TESTING SANITARY SEWER FORCE MAINS

(a) TEST SPECIFICATIONS

The pressure tests shall be performed in the following manner:

Water shall be pumped into the main, bringing the pressure in the main equal to, or greater than, 1.5 times the design operating pressure. After a period of thirty minutes, water shall again be pumped into the main to bring the pressure up to the required test pressure and the quantity of water used during the test shall be accurately measured through a standard water service meter with a sweep unit hand that registers one gallon per revolution. The meter shall be approved by the District prior to testing. The allowable water consumption shall not exceed the quantities given by the following formula:

$$L = \frac{N \times D \times P}{1{,}850}$$

Where:

- **L** = allowable leakage in gallons per hour
- **N** = number of pipe joints
- **D** = pipe diameter in inches
- **P** = test pressure in pounds per square inch

A positive displacement type pump shall be furnished by the Contractor for the testing. Feed for the pump shall be from a container wherein the actual amount of "make-up" water can be measured.

Any leakage caused by defective workmanship or materials shall be repaired and the line shall again be tested to full compliance at the Contractor's expense. Concrete thrust blocking for fittings shall be in place and the concrete strength is sufficiently to withstand the test pressure before starting the test. Where permanent blocking is not

Provided to Builders Exchange of WA, Inc. For usage Conditions Agreement see www.bxwa.com - Always Verify Scale

required, the Contractor shall furnish and install temporary blocking and remove it after testing. The test pressure shall be applied at the low end of the section of pipe being tested. Air in the pipe shall be vented at all high points.

All field equipment for testing as above described shall be furnished and operated by the Contractor, subject to approval by the District.

The Contractor shall conduct preliminary tests and assure itself that the section to be tested is in an acceptable condition before requesting the District Engineer to witness the test.

(b) FORCE MAIN Thrust Blocks

All fittings, such as bends, shall be blocked with concrete in order to prevent movement and separation of pipe joints in accordance with the Water Standard Details for concrete thrust blocking. Sufficient time shall be allowed for the concrete to attain sufficient strength before commencement of pressure tests.

9. MANHOLE VACUUM TESTING

All manholes shall be vacuum tested in accordance with ASTM C1244-05 to verify water tightness. All manhole penetrations shall be blocked or sealed and braced prior to the testing in order to prevent pipes, boots, gaskets or any other materials from being drawn into the manhole. A vacuum of ten (10) inches of Hg shall be drawn on the manhole and the vacuum pump shut off. The time for the vacuum on the manhole to drop from ten (10) inches of Hg to nine (9) shall be measured and the manhole shall have passed the vacuum test if the time measured is greater than shown in the following table:

Minimum Test Times for MH Vacuum Testing

MH Diameter (inches)	Depth (feet)									
	8 or less	10	12	14	16	18	20	22	24	26
	Time (seconds)									
48	20	25	30	35	40	45	50	55	59	64
54	23	29	35	41	46	52	53	64	64	75

If the time required for the pressure to drop from 10 inches of Hg to 9 inches of Hg is less than the value indicated in the table, the manhole shall be rejected by the District and shall be repaired or replaced and re-tested by the Contractor.

10. LAYING DUCTILE IRON WATER MAIN

All pipes shall be installed in accordance with these specifications and the instructions of the manufacturer subject to the approval of the District.

Provided to Builders Exchange of WA, Inc. For usage Conditions Agreement see www.bxwa.com - Always Verify Scale

Unless otherwise indicated on the plans, minimum cover shall be 3' for 8" diameter pipe and smaller, and 4' for pipe that is larger than 8" in diameter.

All pipe ends shall be square with the longitudinal axis of the pipe and any damage to the ends shall be cut off before installation, if approved by the District. Where necessary to cut the pipe, the pipe shall be cut with approved cutting tools.

The pipe shall be laid in a straight grade through localized breaks in grade, the excavation shall be deepened gradually at changes in the street grades so that there are no abrupt changes in pipeline grade. To maintain the required alignment, use short lengths and deflect the joints or use necessary bends.

Each pipe section shall be carefully lowered into place in the ditch after inspecting it for defects and removing any gravel or dirt, etc., from the interior of the pipe.

Where it is necessary to cross sanitary sewer or storm sewer trenches, all trench backfill shall be removed and replaced with mechanically compacted pit run material or CDF in order to provide a uniform support for the full length of the pipe.

A 10-foot horizontal separation must be maintained between all sanitary sewer lines and water lines. A 3-foot minimum horizontal separation shall be maintained between other underground utilities, unless otherwise approved.

All pipe shall be kept free of gravel, dirt and other contaminants. Temporary pipe plugs must be installed at all exposed pipe ends at the end of each working day. The pipe plug must be a water tight, mechanical device, and shall be cleaned thoroughly prior to installation.

11. GALVANIZED IRON PIPE

Galvanized iron pipe and fittings shall be threaded. Joints shall be made up in accordance with good plumbing practice. All threads shall be coated with pipe thread sealer before connecting.

12. CONCRETE BLOCKING

Concrete blocking shall be 2500psi minimum strength, cast in place and have a minimum of 1/2 square foot bearing against the fitting. Blocking shall bear against fittings only and shall be clear of joints so as to permit taking up or dismantling joint. The Contractor shall install blocking which is adequate to withstand full test pressure as well as to continuously stand operating pressures under all conditions of service. For concrete blocking based upon a 250 psi test pressure, see the Standard Details.

Provided to Builders Exchange of WA, Inc. For usage Conditions Agreement see www.bxwa.com - Always Verify Scale

13. FIRE HYDRANT INSTALLATION

Fire hydrant shall be set as shown in the Standard Detail. Mega-lugs or stainless steel tie rods shall be used to restrain the ductile iron pipe between the hydrant foot and the 6" hydrant valve.

The location of the fire hydrant shall be shown on the plans to determine length of hydrant run required. The hydrant shall be set on a solid concrete block 4"x8"x16" and a minimum of 6 cubic feet of clean gravel shall be placed around the base of the hydrant for a drain pocket.

Fire hydrants shall be set plumb and with the ports oriented as directed by the Fire Protection District having jurisdiction over said area.

In some instances, it may be necessary to make a cut or provide a fill to set a hydrant. Where this occurs, the area for at least a three (3) foot radius around the hydrant shall be graded and leveled, and the cut slopes or fill slopes shall be neatly graded by hand, unless otherwise approved by the District and the Fire Chief.

No tool other than an approved hydrant-operating wrench shall be used when operating hydrants.

Fire hydrants shall be prime-coated and finish coated in accordance with the Standard Detail.

14. GUARD POST INSTALLATION

Fire hydrant guard posts shall be installed if indicated on the plans or specified by the District. Guard posts shall be set with the top of the guard posts level with bonnet flange of the fire hydrant. They shall be plumb, and where two posts are used at a hydrant, they shall be set with their tops at the same elevation. The posts shall be coated in the same manner and with the same color as the fire hydrants.

15. GATE VALVE AND BUTTERFLY VALVE INSTALLATION

Gate and butterfly valves shall be set in the ground vertically and shall be opened and shut under pressure to check operation and, at the same time, show no leakage. Valves 8 inches and larger that are not flanged to other fittings shall be blocked in accordance with the Standard Blocking Details.

16. VALVE BOX INSTALLATION

Valve boxes shall be set flush to the adjacent finished grade.

Provided to Builders Exchange of WA, Inc. For usage Conditions Agreement see www.bxwa.com - Always Verify Scale

For valves located outside of paved areas, an asphalt pad for the valve box shall be constructed according to the Standard Detail. The asphalt pad shall be provided for all valves, unless otherwise directed.

17. AIR AND VACUUM RELIEF VALVE INSTALLATION

Air and vacuum relief valve assembly shall be installed as shown on the Standard Detail.

Location of the air release valves shall be at the high points of the line. Water line must be constructed so that the air release valve may be installed in a convenient location.

18. 2-INCH BLOW-OFF INSTALLATION

2" Blow-offs shall be installed for 12" diameter pipe and smaller in accordance with the Standard Detail.

19. LOCATING WIRE

All water mains and side services installed shall have 14-gauge solid copper wire with neoprene coating. Wire shall be placed in the trench over the water main and the ends brought up into the valve boxes. Locating wire shall also be placed over the water service line and brought up into the meter box. All connections or splicing shall be made with District approved split-bolt wire connectors.

20. WATER SERVICE INSTALLATION

All service installations shall be according to the Standard Details.

21. HYDROSTATIC TESTS

After backfilling the water main with sufficient material to prevent movement of the pipeline and allowing sufficient time for the concrete blocking to set, the water main shall be pressure tested in convenient lengths as directed by the District. In general, new mains shall be tested between valves and large sections of untested main will not be permitted to accumulate.

The pipeline shall be filled by the District with water slowly and air expelled from the pipeline prior to starting the test. All pipelines shall be tested at a hydrostatic pressure of 250 psi at high point. All necessary pump, valves, meter gauges, piping, 2" blow-offs, hose and labor required shall be furnished by the Contractor.

The pressure tests shall be performed in the following manner:

Provided to Builders Exchange of WA, Inc. For usage Conditions Agreement see www.bxwa.com - Always Verify Scale

Water shall be pumped into the main, bringing the pressure in the main up to the required test pressure. After a period of one hour, water shall again be pumped into the main to bring the pressure up to the required test pressure and the quantity of water used during the test shall be accurately measured through a standard water service meter with a sweep unit hand that registers one gallon per revolution. The meter shall be approved by the District prior to any testing. The allowable water consumption shall not exceed the quantities as shown in the following table.

Allowable Water Consumption

Pipe Diameter (inches)	Allowable Water Leakage (gallons per hour/1000 feet of pipe)
2	0.21
4	0.42
6	0.63
8	0.84
12	1.26
16	1.68
18	1.89
Larger Sizes	As determined by District

All visible leakage shall be corrected and all new valves installed under these specifications shall be tight.

Any pressure drop during the test period shall not be abrupt under any circumstances and the District shall be the sole judge as to whether the pressure drop is acceptable for the conditions existing in the pipeline being tested.

Whenever repairs or corrections are necessary, the pressure test shall be repeated to provide acceptability.

22. STERILIZATION AND FLUSHING OF WATER MAIN

Upon successful completion of the hydrostatic test, all new water mains and repaired portions of, or Extension to, mains shall be flushed and sampled for purity per AWWA C651-05. The District will collect two consecutive samples for testing taken 24 hrs apart and will forward the bacteriological test results to the Contractor. Only upon receipt of a satisfactory bacteriological report will the Contractor be allowed to make connections to the existing main.

Water supply for filling, testing and flushing of the new mains will be available from the existing distribution system. The Contractor shall make arrangements with the District for the necessary flushing of the pipeline. Opening of valves and

Provided to Builders Exchange of WA, Inc. For usage Conditions Agreement see www.bxwa.com - Always Verify Scale

use of water from the District's system will be done by the District and water for flushing will be provided by the District.

Taps required by the Contractor for temporary or permanent release of air, chlorination or flushing purposes shall be provided by the Contractor as a part of the construction of water mains.

(a) DECHLORINATION AND DISPOSAL OF TREATED WATER

Unless otherwise specified, the District shall be responsible for disposal of treated water flushed from mains and shall neutralize the wastewater for protection of aquatic life in the receiving water before disposal into any natural drainage channel.

(b) REQUIREMENT OF CHLORINE

Before being placed into service, all new mains and repaired portions of, or extensions to, existing mains shall be chlorinated by the Contractor so that a chlorine residual of not less than 10 ppm remains in the water after standing 24 hours in the pipe.

The initial chlorine content of the water shall be not less than 50 ppm.

(c) FORM OF APPLIED CHLORINE

Chlorine shall be applied by one of the following methods, to give a dosage of not less than 50 ppm of available chlorine.

1. DRY CALCIUM HYPOCHLORITE

   As each length of pipe is laid, sufficient high test calcium hypochlorite (65-70% chlorine) shall be placed in the pipe to yield a dosage of not less than 50 ppm available chlorine, calculated on the volume of the water which the pipe and appurtenances will contain.

   The number of ounces of 65% test calcium hypochlorite required for a 20-foot length of pipe equals $0.008431D^2$, in which "D" is the diameter in inches.

2. LIQUID CHLORINE

   A chlorine gas-water mixture shall be applied by means of a solution-feed chlorinating device, or the dry gas may be fed directly through proper devices for regulating the rate of flow and providing effective diffusion of the gas into the water within the pipe being treated. Chlorinating devices for feeding solution of the chlorine gas, or the gas

Provided to Builders Exchange of WA, Inc. For usage Conditions Agreement see www.bxwa.com - Always Verify Scale

itself, must provide means for preventing the backflow of water into the chlorine.

3. CHLORINE-BEARING COMPOUNDS IN WATER

   A mixture of water and high-test calcium hypochlorite (65-70% Cl) may be substituted for the chlorine gas-water mixture. The dry powder shall first be mixed as a paste and then thinned to a 1 per cent chlorine solution by adding water to give a total quantity of 7.5 gallons of water per pound of dry powder. This solution shall be injected in one end of the section of main to be disinfected while filling the main with water.

4. SODIUM HYPOCHLORITE

   Sodium hypochlorite, commercial grade (15% Cl) or in the form of liquid household bleach (5% Cl) may be substituted for the chlorine gas-water mixture.

   This liquid chlorine compound may be used full strength or diluted with water and injected into the main in correct proportion to the fill water so that dosage applied to the water will be at least 50 ppm.

(d) PREVENTING REVERSE FLOW

During flushing, filling and testing, the District shall make the connections to the existing distribution system and the new water pipelines and shall utilize a backflow prevention device approved by the State Department of Health.

(e) RETENTION PERIOD

Treated water shall be retained in the pipe for a minimum of 24 hours and a maximum of 48 hours. After this period, the chlorine residual at pipe extremities and at other representative points shall be at least 10 parts per million.

(f) CHLORINATING VALVES AND HYDRANTS

In the process of chlorinating newly-laid pipe, all hydrant valves and other appurtenances shall be opened while the pipeline is filled with the chlorinating agent and under normal operating pressure.

(g) CHLORINATING FINAL CONNECTIONS TO EXISTING WATER MAINS AND SERVICE CONNECTIONS

The chlorinating procedure to be followed shall be as specified by AWWA. All closure fittings shall be swabbed with a 50 ppm minimum chlorine solution.

Provided to Builders Exchange of WA, Inc. For usage Conditions Agreement see www.bxwa.com - Always Verify Scale

(h) FINAL FLUSING AND TESTING

Before placing the lines into service, a satisfactory bacteriological test report shall be received.

(i) REPETITION OF FLUSHING AND TESTING

Should the initial treatment result in an unsatisfactory bacteriological test, repeat flushing and testing shall be completed by the District. Should the second test fail, the costs for subsequent disinfection and testing shall be the responsibility of the Contractor.

23. CONNECTION TO EXISTING WATER MAIN

The Contractor shall not operate any gate valves on the water system. Connections to the existing main shall not occur until satisfactory purity tests have been obtained and without approval of the District.

The Contractor shall make the necessary arrangements with the District for the connection to the existing water main.

Water service outages shall be limited to a four-hour duration in order to minimize inconvenience to water users and maintain fire protection for the area. The Contractor shall provide a minimum of 72 hours notice to the District prior to the required shutdown. The District will alert affected property owners of the proposed service interruptions.

Existing mains shall be kept in operation until the new main has been constructed, satisfactorily tested and disinfected and is ready for operation. Connections to the existing system shall then be made.

All material used for the connection shall be thoroughly sterilized by swabbing the interior with a chlorine solution of 50 ppm.

24. STEEL CASING

Steel casing shall be in accordance with the Materials of Construction and the Standard Details.

Sizing and wall thickness of casing shall be approved by the District.

Jacking and boring of casing pipe shall be accomplished in such a manner that there will be no damage to the existing improvements. Boring shall be accomplished by mechanical augering or drilling of the soil. The casing shall be jacked close enough behind the boring operation so there is no caving of soil

Provided to Builders Exchange of WA, Inc. For usage Conditions Agreement see www.bxwa.com - Always Verify Scale

from above. Removal of the material from the bored hole by washing or sluicing will not be permitted.

If excess voids are created around the casing, holes shall be drilled through the casing and the voids shall be pumped full of cement grout. All excess excavated material shall be disposed of in a manner acceptable to the District and permitting agencies.

The carrier pipe shall be supported on casing spacers at 10 ft. maximum spacing and shall be installed with restrained joints. See the Engineering Specifications, Materials of Construction and the Standard Detail for additional information.

25. EXCAVATION AND BACKFILL FOR UTILITY CONSTRUCTION

(a) TEMPORARY TRAFFIC CONTROL

The Contractor shall make suitable, safe, and adequate provision for necessary traffic around, over, or across the work in progress and shall schedule pavement patching to follow after backfill is completed as directed by regulatory agency.

The contractor shall submit a traffic control plan for review and approval by the District and the permitting agency prior to beginning work. Traffic control shall conform to Section 1-10 of the 2010 Standard Specifications for Road, Bridge and Municipal Construction of the Washington State Department of Transportation.

(b) EXCAVATING IN PAVED AREAS

Prior to excavating in paved areas, the existing road surface shall be cut a minimum of 1' back from the outer edge of the excavation with approved cutting equipment. The cuts are to be made in clean, straight lines to insure a minimum of damage to the existing pavements. All cuts in existing concrete pavement are to be made with a concrete saw, except that where the concrete has been overlaid with asphalt, the pavement may be drilled on three (3) inch centers 1' (minimum) from the outer edge of the excavation on each side of the trench section. If the Contractor fails to adequately protect the cut edges during construction, it will be required, at its own expense, to re-cut the edges a minimum of 1' back from the edge of excavation prior to repairing the pavement.

(c) TRENCH SAFETY AND EXCAVATION

Contractor shall provide and install trench safety systems such as shoring or trench boxes or shall employ construction techniques such back sloping that meet the applicable State and Federal safety regulations.

Provided to Builders Exchange of WA, Inc. For usage Conditions Agreement see www.bxwa.com - Always Verify Scale

Use and removal of trench safety systems shall be accomplished in such a manner that there will be no damage to the work or to the other properties.

Maximum and minimum trench widths shall be in accordance with the dimensions shown on the Standard Details.

In all cases, trenches must be of sufficient width to permit proper joining of the pipe and backfilling of material along the sides of the pipe. Trench width at the surface of the ground shall be kept to the minimum amount necessary for proper installation of the work in a safe manner.

Trenches wider than the maximum specified may result in a greater load on the pipe and, consequently, if the maximum trench width is exceeded by the Contractor, the Contractor shall, at its own expense, provide pipe of higher strength classification or provide a higher class of bedding where necessary to assure that the pipe will not be overloaded.

The maximum length of open trench permissible on any line, in advance of pipe laying, will be 100 feet for sewer pipe and 250 feet for water mains, except at the end of each day's operations, there shall be no trench in which pipe laying, embedment and backfill have not been completed.

Upon completion of work each day, all open trenches shall be completely backfilled, leveled and temporarily patched, graveled, fenced, or sheeted as required by the regulatory agency and the District.

Excavation for manholes, valves, structures and other appurtenances shall be sufficient to provide enough room for compaction equipment between the outside surfaces and the sides of the excavation.

All material excavated from trenches and stored adjacent to trench or in a roadway or public thoroughfare shall be maintained in such manner that will cause a minimum of inconvenience to public travel. Provision shall be made for traffic where such is necessary. Free access shall be provided to all fire hydrants, water valves, and meters and clearance shall be left to enable the free flow of storm water in all gutters, conduits, and natural water courses. Where the trench bottom is a material which is unsuitable for providing an adequate foundation or material which will make it difficult to obtain uniform bearing for the pipe such material shall be removed and replaced with “foundation gravel", as previously defined.

(d) PIPE BEDDING AND TRENCH BACKFILL

The placement and compaction of the pipe bedding and trench backfill shall be in accordance with the requirements of the various applicable sections of these specifications and as shown on Standard Details.

Provided to Builders Exchange of WA, Inc. For usage Conditions Agreement see www.bxwa.com - Always Verify Scale

Where excavated material is not approved for backfill or bedding, imported backfill gravel conforming to the Materials of Construction shall be provided

Where governmental agencies other than the District have jurisdiction over roadways, the backfill shall be in accordance with the agencies requirements.

Bedding material shall be carefully placed and firmly compacted to provide a firm, uniform cradle for the pipe. The minimum thickness of the layer of bedding material required shall be 4 inches under the bell for all pipe sizes of 27 inches diameter and smaller, 6 inches for all pipe sizes 30 inches diameter and larger and 6 inches under the bell of the pipe for all diameter pipes where rock is excavated. The Contractor shall provide firm, continuous support for the pipe.

After the pipe laying operation, additional bedding material shall be placed and compacted by hand tools for the full width of the trench to a height of 6" above the top of the pipe.

In backfilling the trench, the Contractor shall take all necessary precautions to protect the pipe and protective coating from any damage or shifting of the pipe.

No timber bracing, lagging, sheathing or other lumber shall be left in any excavation.

At all roadway and driveway crossings and within existing paved rights-of-way and in such additional locations as may be directed by the District, the trench shall be immediately backfilled after the pipe is installed and inspected and shall be immediately provided with a temporarily graveled surface and continually maintained on a daily basis until replaced with permanent repair as required.

The Contractor shall be responsible for restoring to a condition equal to the prior condition of any and all existing utilities, culverts, ditches, drains, landscaping or other facilities which are damaged as a result of the Contractor's operation.

26. COMPACTION OF TRENCH BACKFILL

(a) TRENCHING PARALLEL TO ROAD ALIGNMENT

All trench backfill under roadway shall be mechanically compacted to 95% of maximum dry density.

In any trench in which 95% density cannot be achieved with existing backfill, the existing backfill shall be replaced with imported gravel backfill

Provided to Builders Exchange of WA, Inc. For usage Conditions Agreement see www.bxwa.com - Always Verify Scale

as specified in the Engineering Specifications. The imported gravel backfill shall be mechanically compacted to 95% of maximum dry density for the full depth of the trench.

All backfill material shall be compacted in 24" maximum lifts using heavy machinery or 12" maximum lifts using hand equipment.

(b) TRENCHING TRANSVERSE TO ROAD ALIGNMENT

For transverse trenching locations, such as side sewers and intersections, the entire trench shall be backfilled with 1-1/4" minus crushed rock per the Engineering Specifications and placed in the maximum lifts listed above in Section 5.25 (a) and compacted to 95% of maximum dry density.

The moisture content of all soils used shall be within 2% of optimum. All densities shall be determined by the ASTM D-1557 (Modified Proctor) test procedure. The District will conduct on-site materials sampling and in-place density testing for all District projects. For private development projects, all testing is to be provided and paid for by the developer. The Contractor shall coordinate the testing with the District and shall provide convenient and safe access to the site and the trench for sampling and testing.

27. REPLACING ROAD SURFACE

The Contractor shall restore all roadway and driveway surfaces and features excavated or disturbed to a condition acceptable to the District and the governmental agency having control of the road.

All work in County right-of-way shall be subject to the approval of the King County. All work in the City street right-of-way shall be subject to approval of the City.

Paving restoration consists of two steps. The first step is installation of a temporary cold mix patch to be maintained until all work and other restoration is complete or up to 30 days. The second step is installation and sealing of the permanent pavement trench patch.

This work shall consist of the preparation, placing and compaction of subgrade and the patching of various types of pavement cuts to the complete resurfacing of roadways, the performance of which shall be in accordance with the requirements outlined herein. Roadway surface restoration and patching shall be in accordance with the 2010 Standard Specifications for Road, Bridge and Municipal Construction of the Washington State Department of Transportation, unless specifically directed otherwise by the District.

Provided to Builders Exchange of WA, Inc. For usage Conditions Agreement see www.bxwa.com - Always Verify Scale

Before patching material is placed, all pavement cuts shall be trued so that marginal lines of the patch will form a rectangle with straight edges and vertical faces a minimum of one (1) foot back from the maximum trench width.

The Contractor shall maintain proper signs, barricades, lights and other warning devices in accordance with the traffic control plan.

(a) GRAVEL BASE

Gravel base for road restoration shall conform to the Materials of Construction specifications and shall be placed and compacted in conformance with Sections 2 and 9 of the 2010 Standard Specifications for Road, Bridge and Municipal Construction of the Washington State Department of Transportation. Gravel base shall be placed and compacted before succeeding course material is placed.

Gravel base shall be used as shown on the plans or as directed by the District.

(b) ASPHALT CONCRETE SURFACING

Asphalt concrete surfacing or repair shall be asphalt concrete pavement, Class "B", according to the Materials of Construction and shall be placed in accordance with Section 5-04 the 2010 Standard Specifications for Road, Bridge and Municipal Construction of the Washington State Department of Transportation and the Standard Specification Drawing for Permanent Asphalt Concrete Patch. All edges and joints of asphalt concrete pavement repair shall be sealed with asphalt cement. After pavement is in place, all joints shall be sealed with SS-1, or equal.

(c) CEMENT CONCRETE PAVEMENT

Concrete shall be as specified in the Materials of Construction and shall be placed in accordance with Section 5-05 of the 2010 Standard Specifications for Road, Bridge and Municipal Construction of the Washington State Department of Transportation. Concrete cylinder samples will be taken by the District for the purpose of testing the compressive strength of the concrete to meet the standards as defined by the regulatory agency. Subgrades shall be prepared as shown on the plans and in compliance with the 2010 Standard Specifications for Road, Bridge and Municipal Construction of the Washington State Department of Transportation.

All reinforcing steel shall conform with and be placed in accordance with Section 5-05 of the 2010 Standard Specifications for Road, Bridge and Municipal Construction of the Washington State Department of

Provided to Builders Exchange of WA, Inc. For usage Conditions Agreement see www.bxwa.com - Always Verify Scale

Transportation and shall conform to the requirements of ASTM Designation A-15 and A-305, latest revisions.

(d) RIGID-TYPE PAVEMENTS RESURFACED WITH ASPHALT

Those areas that now have a Portland cement concrete base and are surfaced with the asphalt concrete mat shall be replaced in kind. The surface of the cement concrete portion of the patch shall be left low enough to accommodate the asphalt portion of the patch. Brush finishing will not be required. Joints shall be placed as directed by the District. The asphalt concrete surface mat and the Portland cement concrete base shall be as specified in the Materials of Construction. Both the base and the surface mat shall be carefully prepared, placed and cured in full compliance with Section 5-04.3 of the 2010 Standard Specifications for Road, Bridge and Municipal Construction of the Washington State Department of Transportation.

Asphalt concrete or bituminous plant mix shall not be placed until the day after the cement concrete has been placed unless otherwise permitted by the District. The edges of the existing asphalt pavements and castings shall be painted with hot asphalt cement or asphalt emulsion immediately before placing the asphalt patching material. The asphalt concrete pavement shall then be placed, leveled and compacted to conform to the adjacent paved surface. Immediately thereafter, all joints between the new and original asphalt pavement shall be painted with hot asphalt or asphalt emulsion and be covered with dry paving sand before the asphalt solidifies.

(e) SHOULDER, GRAVEL SURFACES

Shoulders, gravel driveways, and all other gravel surfaced areas disturbed by construction shall be repaired with a minimum 2 inch lift of 3/4 inch minus crushed rock (top course crushed surfacing). Immediately prior to placement of the gravel, the drainage ditch, shoulders and/or driveways shall be graded to the original smooth contours existing prior to the construction of sewer lines in the area. The gravel shall then be placed and compacted in accordance with the applicable State Highway Standard Specifications.

Crushed surfacing shall be in accordance with Materials of Construction.

Final crushed surfacing shall be placed within 30 days after construction disturbance unless otherwise specified or directed by the District.

Provided to Builders Exchange of WA, Inc. For usage Conditions Agreement see www.bxwa.com - Always Verify Scale

28. ADJUSTMENT OF NEW AND EXISTING UTILITY STRUCTURES TO GRADE

This work consists of constructing and/or adjusting all new and existing utility structures encountered on the project to finished grade.

The castings shall not be adjusted until the pavement is completed, at which time the center of each casting shall be relocated from references previously established by the Contractor. The pavement shall be cut as further described and base material removed to permit removal of the casting. The casting shall then be brought to proper grade.

Prior to commencing manhole adjustments, a plywood and visqueen cover, as approved by the District, shall be placed over the manhole base and channel to protect them from debris.

The asphalt concrete pavement shall be cut and removed to a neat circle, the diameter of which shall not exceed 6" from the outside diameter of the casting frame. The casting frame shall be brought up to desired grade, which shall conform to surrounding road surface. For manholes, adjustment to desired grade shall be made with the use of concrete adjustment rings or bricks. No iron adjustment rings will be allowed. An approved class of mortar (one part cement to two parts of plaster sand) shall be placed between adjustment rings or bricks and casting frame to completely fill all voids and to provide a watertight seal. No rough or uneven surfaces will be permitted inside or out. Adjustment rings or brick shall be placed and aligned so as to provide vertical sides and vertical alignment of ladder steps (if steps are necessary).

Check manhole specifications and the Standard Details for minimum and maximum manhole adjustment and step requirements. Special care shall be exercised in all operations in order not to damage the manhole, frames and lids or other existing facilities.

The annular space between the casting and the pavement shall be filled with crushed rock and compacted with hand tamper to within 2" of the top of the frame. Asphalt concrete patching shall not be carried out during wet ground conditions or when air temperature is below 50°. Asphalt concrete mix must be at the temperature as specified by the regulatory agency when placed. Before making the asphalt concrete repair, the edges of the existing asphalt concrete pavement and the outer edge of the casting shall be tack coated with hot asphalt cement. The remaining 2" shall then be filled with Class B asphalt concrete and compacted with hand tampers and a patching roller.

Provided to Builders Exchange of WA, Inc. For usage Conditions Agreement see www.bxwa.com - Always Verify Scale

The completed patch shall match the existing paved surface for texture, density and uniformity of grade. The joint between the patch and the existing pavement shall then be carefully painted with hot asphalt cement or asphalt emulsion and shall be immediately covered with dry paving sand before asphalt cement solidifies. Before acceptance of a job, castings shall be cleaned of all debris and foreign material. All ladders must be cleaned free of grout. Any damage occurring to the existing facilities due to the Contractor's operations shall be repaired at its own expense.

29. HAZARD OF ASBESTOS CEMENT PIPE REMOVAL

To remove existing asbestos cement pipe from the trench, permitting as determined by regulatory agencies is required.

30. RIGHT-OF-WAY MONUMENTS AND LOT MARKERS

Contractor shall take necessary precautions to locate and protect existing markers, property corners, monuments and other reference points that may be affected by construction. Each such marker shall be identified, and if it is necessary for the marker to be removed due to construction then the following procedure shall apply:

- The Contractor shall notify the District of the location of the marker at least three days prior to any construction which may affect the marker.
- If the marker is for survey use, or if requested by the District, a qualified, licensed land surveyor shall be scheduled by District to establish reference points and eventually reset the marker.
- If the marker is within the right-of-way or easement limits for the Work, the District will pay for the required survey work and recording of survey.
- If the marker is at the edge of or outside the right-of-way or easement limits for the Work, Contractor shall pay for the required survey work and recording of survey.

The Contractor shall not knowingly remove any such marker before such marker can be referenced by a land surveyor. All survey costs for replacing markers and recording of survey shall be paid by Contractor if such markers are removed by Contractor prior to proper referencing by a land surveyor. The Contractor will not be entitled to any delay costs for referencing an existing marker unless its work is physically delayed by the referencing work, and a minimum of 72 hours (3 working days) notice has been previously given to District of the existence of the marker and the need for it to be referenced.

Provided to Builders Exchange of WA, Inc. For usage Conditions Agreement see www.bxwa.com - Always Verify Scale

31. RE-DESIGN OF LINES

Should interferences or obstructions create construction difficulties that the District determines shall require redesign or relocation of the lines, the District will prepare the necessary revised drawings.

32. GRASS SEEDING AND SOD

Areas of existing grass and all areas disturbed by construction which do not receive a specific type of restoration, such as paving, rock, or bark, shall be reseeded, or restored with sod as specified.

The Contractor shall be responsible for providing a finished grass area, which meets the approval of the property District and the District.

The Contractor shall maintain the grass, including furnishing water and mowing, until project approval, unless otherwise specified.

(a) TOPSOIL

All areas to be seeded, reseeded or sodded shall be provided with 4" minimum depth of topsoil. Topsoil used shall be imported and shall be subject to approval by the District. Prior to providing topsoil, all areas shall be raked smooth and all debris removed and disposed. The topsoil shall be tilled to a depth sufficient to key into the subsoil, raked to a smooth and even grade without low areas to trap water and compacted.

The Contractor shall notify the engineer not less than 24 hours in advance of any seeding or sodding operation and shall not begin seeding or sodding until areas prepared or designated have been approved by the District.

(b) SEEDING AND FERTILIZING

Prior to beginning seeding operations, the contractor shall submit seed mix and rate of application to the District for approval.

Seeding shall not be done during windy weather or when the ground is frozen, excessively wet or otherwise untillable.

Seed and fertilizer may be sown by one of the following methods:

1. An approved hydroseeder in accordance with the 2010 Standard Specifications for Road, Bridge and Municipal Construction of the Washington State Department of Transportation.

Provided to Builders Exchange of WA, Inc. For usage Conditions Agreement see www.bxwa.com - Always Verify Scale

2. Hand methods where allowed by the District in areas that are impossible to hydroseed. Seed shall be applied after the fertilizer and shall be raked into the top one (1) inch of the fertilized topsoil. Immediately following the raking of the seed into the soil, the total area shall be covered with District approved mulch and shall be rolled with a water-filled roller.

The seed shall have a tracer added to visibly aid uniform application. The tracer shall not be harmful to plant and animal life. If wood cellulose fiber is used as a tracer the application rate shall not exceed 250 lbs. per acre.

Fertilizer shall be provided and applied in accordance with the manufacturer's recommendations. The Contractor shall submit for approval a guaranteed fertilizer analysis label for the specified product.

Unless otherwise specified, seeding, fertilizing and mulching shall be completed between April 15 to June 1 and August 15 to October 15.

(c) GRASS SOD

Sod shall be provided at all locations of established lawn disturbed by construction activities and at other locations as indicated on the plans.

Sod strips shall be placed within 48 hours of being cut. Placement shall be without voids and the end joints shall be staggered. The sod shall be rolled with a smooth roller following placement.

33. FINISHING AND CLEANUP

Before acceptance of the project, all pipes, manholes, catch basins, and other appurtenances shall be cleaned of all debris and foreign material. After all other work on the project is completed and before final acceptance, the entire roadway, including the roadbed, planting, sidewalk areas, shoulders, driveways, alley and side street approaches, slopes, ditches, utility trenches, and construction areas shall be neatly finished to the lines, grades and cross-sections shown on the plans and as hereinafter specified.

In undeveloped areas, the entire area which has been disturbed by the construction shall be shaped so that, upon completion, the area will present a uniform appearance, blending into the contour of the adjacent properties. All other requirements outlined previously shall be met. Slopes, sidewalk areas, planting areas and roadway shall be smoothed and finished to the required cross-section and grade.

Provided to Builders Exchange of WA, Inc. For usage Conditions Agreement see www.bxwa.com - Always Verify Scale

Upon completion of the cleaning and dressing, the project shall appear uniform in all respects. All graded areas shall be true to line and grade as shown on the typical sections and as required by the District.

All rocks in excess of one (1) inch diameter shall be removed from the entire construction area and shall be disposed of the same as required for other waste material. In no instance, shall the rock be thrown onto private property. Overhang on slopes shall be removed and slopes dressed neatly so as to present a uniform, well sloped surface.

All excavated material at the outer lateral limits of the project shall be removed entirely. All debris resulting from clearing and grubbing or grading operations shall be removed and disposed.

Drainage facilities, such as inlets, catch basins, culverts, and open ditches, shall be cleaned of all debris resulting from the Contractor's operations.

All pavements and oil mat surfaces, whether new or old, shall be thoroughly cleaned. Existing improvements, such as Portland cement concrete curbs, curb and gutters, walls, sidewalks, and other facilities which have been sprayed by the asphalt cement shall be cleaned to the satisfaction of the District.

Castings for manholes, monuments, water valves, lamp poles, vaults, and other similar installations which have been covered with the asphalt material shall be cleaned to the satisfaction of the District.

Provided to Builders Exchange of WA, Inc. For usage Conditions Agreement see www.bxwa.com - Always Verify Scale