Saint Edward Park Sports Fields

Draft Stormwater Technical Information Report

City of Kenmore, Washington

July 2016

505 Fifth Avenue S, Suite 300
Seattle, WA 98104
1.800.615.9900 / 206.436.0515

Perteet

Table of Contents

1.0 PROJECT OVERVIEW 1

1.1 EXISTING CONDITIONS 1
1.2 PROPOSED CONDITIONS 1
1.3 SITE SOILS 2

2.0 CONDITIONS AND REQUIREMENTS SUMMARY 2

3.0 OFFSITE ANALYSIS 3

3.1 UPSTREAM ANALYSIS 3
3.2 DOWNSTREAM ANALYSIS 3

4.0 FLOW CONTROL AND WATER QUALITY FACILITY ANALYSIS AND DESIGN 3

4.1 EXISTING SITE HYDROLOGY 3
4.2 PROPOSED CONDITIONS 4
4.3 FLOW CONTROL FACILITIES 4
4.4 WATER QUALITY TREATMENT 5

5.0 CONVEYANCE SYSTEM ANALYSIS AND DESIGN 5

6.0 SPECIAL REPORTS AND STUDIES 5

7.0 OTHER PERMITS 5

8.0 CSWPPP ANALYSIS AND DESIGN 5

9.0 BOND QUANTITIES, FACILITY SUMMARIES, AND DECLARATION OF COVENANT 6

10.0 OPERATIONS AND MAINTENANCE MANUAL 7

List of Tables

TABLE 4.2.1 SUMMARY OF PROPOSED LAND USE TYPES 4
TABLE 8.1 SUMMARY OF ESC MEASURES 6

List of Attachments

FIGURE 1 – EXISTING DRAINAGE CONDITIONS
FIGURE 2 – EXISTING LAND COVER TYPES
FIGURE 3 – PROPOSED LAND COVER TYPES
FIGURE 4 – UPSTREAM BASIN MAP
FIGURE 5 – DOWNSTREAM ROUTE MAP
DRAINAGE PLANS AND DETAILS
FLOW CONTROL CALCULATIONS WITH CONTRIBUTING AREA MAP

1.0 PROJECT OVERVIEW

The Saint Edward Park Sports Fields project in the City of Kenmore proposes to improve the surface of an existing baseball field. The project will also add pedestrian paths around the field and pave a parking strip on the west edge of the field, creating at least one ADA compliant parking stall. The entire baseball field and pedestrian walkways will be considered new impervious surface, which will require flow control. Figure 1, below, shows the location of the project.

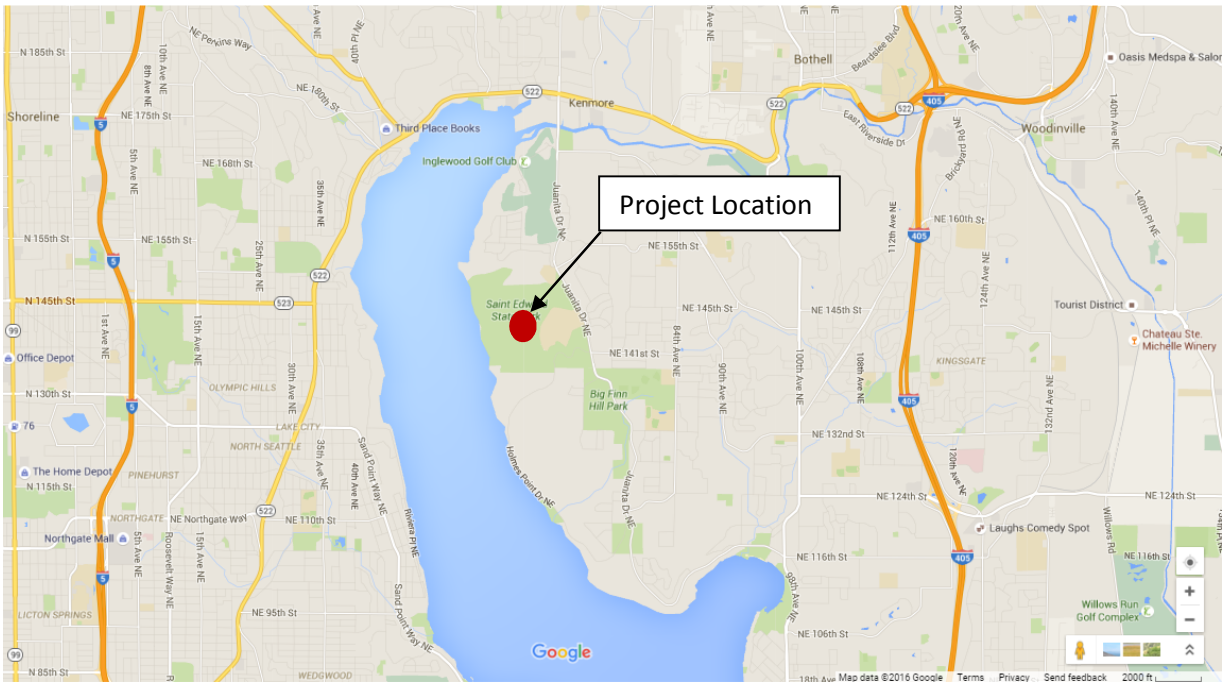

Figure 1 – Vicinity Map

1.1 EXISTING CONDITIONS

In the existing condition, the entire project drains to one common discharge point at the south edge of the baseball field, therefore, there is only one threshold discharge area (TDA) for this project. The baseball field is flat, however the ground on the west, north, and east sides of the field are higher than the field. The area to the south of the field begins to slope downward away from the baseball field, allowing surface water to flow to the south away from the site. There is a small ditch on the west side and a wetland on the east side of the baseball field, both of which collect runoff from the surrounding offsite areas and convey it to the south.

The existing baseball field does not appear to have any stormwater conveyance systems in place to help drain the field. It appears as though the original design was for water within the soil layer of the field to seep out into the two ditches on either side of the field and drain to the south. Proper drainage is not occurring across the existing field, leaving it saturated and essentially unusable during the entire wet season.

1.2 PROPOSED CONDITIONS

The proposed Saint Edward Park Sports Field Project will use permeable synthetic turf for the surface of the baseball fields which will be graded completely flat. Directly below the permeable turf will be a plastic collection grid system that has 95% void space for stormwater runoff to accumulate and flow to a detention system constructed below it. The plastic collection system is 6" deep, providing enough depth to keep the turf from accumulating water at the surface. After removing the existing topsoils, the field will be built up to an

elevation that keeps the plastic grid system at or above the adjacent wetland to prevent lateral flow from the wetland from getting into the field's underdrain system.

Permeable pavement will be used for all pedestrian paths, and underdrains below the paths will collect runoff and route it to the detention system. The existing asphalt path at the north edge of the baseball field will remain in place. A trench drain with an underdrain will collect runoff from the path and route it to the detention system as well to prevent sheet flow from entering the field area.

The existing wetland to the east of the baseball field will remain undisturbed, collecting offsite runoff from the adjacent upstream area to the east of the site.

1.3 SITE SOILS

The Natural Resources Conservation Service (NRCS) Web Soil Survey was used to determine the general soil types present on the site. Based on this, the entire site is on Alderwood soils. Alderwood soils are classified as hydrologic Group B or D by the NRCS, however, geotechnical engineers usually define these soils as Group C after performing lab tests on the soils. Group C and D soils are generally poorly infiltrating soils, and if infiltration is desired, it is recommended to have a geotechnical engineer perform pilot infiltration tests (PIT tests) where ever infiltration facilities are desired.

High groundwater is present in the area, however, after performing a wetland inventory to the east of the project, it was determined that the groundwater is likely due to water accumulating on top of the till layer. It is anticipated that once proper drainage is installed under the field that groundwater will no longer be an issue.

2.0 CONDITIONS AND REQUIREMENTS SUMMARY

The Saint Edward Park Sports Fields Project will comply with the requirements outlined in the 2009 King County Surface Water Design Manual and is subject to a full drainage review because it results in more than 2,000 square feet of new plus replaced impervious surface. Typically in a full drainage review, core requirements 1 through 8 apply including special requirements 1 through 5. This project will be exempt from some of the core requirements and special requirements. A summary of which requirements will be required or exempt and why is provided below.

Core Requirements #1 (Discharge at Natural Location): There are no exemptions to this requirement; therefore, it will apply to this project.

Core Requirement #2 (Offsite Analysis): A full offsite analysis will be required for this project, including an upstream analysis and a level 1 downstream analysis.

Core Requirement #3 (Flow Control): Flow control will be required because this project creates more than 2,000 square feet of new impervious surface.

Core Requirement #4 (Conveyance System): Any new conveyance systems necessary will be designed for a minimum of the 25 year design storm, and all existing conveyance systems that will have additional flow contributing to them will be analyzed for the 10 year design storm to ensure that adequate capacity is still being provided.

Core Requirement #5 (Erosion & Sediment Control (ESC)): There are no exemptions for this requirement; therefore, it will apply to this project. Site preparation plans showing the temporary erosion and sediment control measures will be included with the construction plans, and a Construction Stormwater Pollution Prevention Plan will be submitted by the contractor awarded to construct this project.

Core Requirement #6 (Maintenance & Operations): There are no exemptions for the requirement; therefore, it will apply to this project. Maintenance and Operations for stormwater features used on this project will be included as an Appendix to this report at a later date.

Core Requirement #7 (Financial Guarantees & Liability): There are no exemptions for this requirement; therefore, it will apply to the contractor awarded to construct this project.

Core Requirement #8 (Water Quality): This project is exempt from water quality because it includes less than 5,000 square feet of new plus replaced pollution generating impervious surface (PGIS).

Special Requirement #1 (Other Adopted Requirements): The project is not located within any critical areas and City of Kenmore does not have any other adopted mater plans for this area, therefore, this project is exempt from Special Requirement #1.

Special Requirement #2 (Flood Hazard Area Delineation): Per FEMA floodplain mapping of King County, the project is not located in or near any flood plains and is therefore exempt from Special Requirement #2.

Special Requirement #3 (Flood Protection Facilities): The project does not rely on any flood protection facilities, therefore, this project is exempt from Special Requirement #3.

Special Requirement #4 (Source Control): This project does not require a commercial building or commercial site development permit and is therefore exempt from Special Requirement #4.

Special Requirement #5 (Oil Control): This project is not located within a high use area and is therefore exempt from providing oil control.

3.0 OFFSITE ANALYSIS

3.1 Upstream Analysis

There is one offsite basin which contributes runoff to the Saint Edward Park Sports Fields project. This basin is approximately 2.2 acres of forested land located to the east of the project limits. The basin is shaped like a quarter circle, with the west edge adjacent to the baseball fields, from the southern limit of the fields to NE 145th Street. The southern edge of the basin begins at the southeast corner of the baseball field and extends to the Bastyr University access road. An arc connecting the southeast corner of the offsite basin to the northwest corner of the basin forms the north and east basin limit. The South half of NE 145th Street from approximately 120' east of the east edge of the baseball fields to approximately 220' west of the east edge of the baseball fields will also contribute runoff to the project site. Runoff from this basin will flow from east to west and will sheet flow to a shallow ditch at the east edge of the baseball fields. Runoff from the small portion of NE 145th Street described above will sheet flow onto the north end of the baseball field.

3.2 Downstream Analysis

An onsite downstream analysis was performed on Tuesday February 2, 2016. The weather was sunny and the temperature was approximately 45 degrees Fahrenheit. The ground was dry in most places, however unpaved areas that do not drain properly were damp and muddy. The project discharge location is at the south edge of the existing baseball field where two small conveyance ditches converge into one south southeasterly flowing ditch. This ditch enters an area of dense vegetation. Approximately 700' after leaving the project site, the creek crosses through a 12" concrete culvert. At this location the creek is approximately 2.5' wide and 4" deep. There are no signs of erosion or sedimentation.

4.0 FLOW CONTROL AND WATER QUALITY FACILITY ANALYSIS AND DESIGN

4.1 Existing Site Hydrology

The existing project site is relatively flat with a gentle upward slope between the existing baseball field and private road. There is a ditch on the west side and a wetland on the east side of the baseball field, both of which gently slope to the south where they converge forming a small creek and leave the project site. This is the only existing method of stormwater conveyance on the site. The west ditch conveys a portion of the

existing baseball field and the grass area between the baseball field and the private road. The east wetland also conveys a portion of the baseball field and intercepts runoff from the upstream basin to the east of the project site before it can enter the field. In the existing condition, there is a small amount of impervious area, a private road with gravel parking and an asphalt pedestrian path next to the road, within the project site.

4.2 Proposed Conditions

In the proposed condition, the baseball field will be completely flat and will use a permeable surface with sub-surface conveyance to drain stormwater from the area. Pedestrian paths will be constructed of permeable pavement with underdrains below them due to poorly infiltrating soils. The overall grading of the site will remain unchanged with the exception that the baseball field will be constructed slightly elevated from the existing condition to help keep it dry.

Because the reconstructed baseball fields will be made of synthetic turf, they will be considered new impervious surface. Permeable pavement is also considered impervious surface when determining flow control and water quality treatment thresholds, therefore, all improvements being constructed will be considered new impervious surface. Table 4.2.1 below lists the land cover types in both existing and proposed conditions used for determining which core requirements will be required.

Table 4.2.1 - Summary of Land Cover Types

Land Use Type	Existing Site	Proposed Site
New PGIS*	0.00 ac	0.11 ac
Existing PGIS* (Gravel)	0.08 ac	0.00 ac
New NPGIS**	0.00 ac	2.79 ac
Existing NPGIS** to Remain	0.05 ac	0.04 ac
Total Impervious surface	0.13 ac	2.94 ac
Landscaping/Grass	5.01 ac	2.21 ac

*PGIS – Pollution Generating Impervious Surface
**NPGIS – Non-Pollution Generating Impervious Surface.

Figures 2 and 3 at the end of this report show where on the site each of these surface types are located.

4.3 Flow Control Facilities

As can be seen in Table 4.2.1, there are 0.11 acres of new PGIS and 2.79 acres of new NPGIS, creating a total new impervious surface area of 2.94 acres. This is well over the flow control threshold of 2,000 square feet, therefore, this project will be required to provide flow control for all new and replaced impervious surface. Flow control will be provided for all 2.94 acres of impervious surface within the project site as well as a portion of the grass/landscaping areas onsite. See the Contributing Areas Map at the end of this report for which areas are being collected and routed to the proposed flow control facility.

Western Washington Hydrology Model (WWHM) was used to size a flow control facility, and that calculation can be seen at the end of this report. The City of Kenmore directed the historic condition to be used for flow control sizing be grass/landscaping instead of forest based on a 1936 aerial map. For modelling purposes, all permeable pavements and turf with underdrains will be treated as 75% grass and 25% impervious. All new NPGIS will be permeable with an underdrain system.

A plastic detention grid such as StormTank, Permavoid, or a similar product will be constructed below the southwest corner of the baseball fields. Based on the Western Washington Hydrology Model (WWHM)

calculation, 10,800 cubic feet of detention will be required to meet current flow control requirements. The plastic detention grid will be 60' wide by 60' long by 3' deep, providing the required detention volume. An impermeable liner will be wrapped around the bottom and sides of the detention facility to help keep groundwater from the nearby wetland out of the detention facility.

A 12" pipe will extend from the plastic detention grid to a type 2-54" catch basin with a flow restrictor. The outfall from the flow restrictor riser will release stormwater to the south, using a rock splash pad since the built out 100-year flow is less than 0.2 cubic feet per second greater than the historic condition. This stormwater will flow to the creek just south of the project site.

4.4 Water Quality Treatment

Water quality treatment must be provided on projects which create 5,000 square feet of new plus replaced PGIS. This project creates 0.11 acres (4,890 square feet) of new PGIS and does not replace any PGIS, and is therefore exempt from water quality treatment.

No water quality treatment facilities are proposed for this project.

5.0 CONVEYANCE SYSTEM ANALYSIS AND DESIGN

Proposed conveyance within the Saint Edward Park Sports Fields Project will be in the form of trenched underdrains. The majority of these underdrains will be immediately adjacent to proposed permeable pavement paths. The underdrains will be placed within a layer of clean washed gravel to collect stormwater that infiltrates through the pathway pavement. Trench drains will be used to collect runoff from the existing impervious asphalt path to the north of the baseball fields. The trench drains will consist of a six inch underdrain pipe backfilled with clean washed gravel and covered with topsoil. The topsoil will have a low point at the center of the trench, intercepting the runoff as it infiltrates into the trench. Eight inch PVC pipes will convey stormwater from the underdrains to the proposed detention facility. A backwater analysis has not been performed because fine grading of the project site has not been completed at the time of this report, and therefore trench and pipe elevations and slopes have not been determined.

The baseball fields will also be permeable as previously mentioned. A plastic grid with 95% void space six inches deep will be placed below the baseball field turf. The plastic grid will allow stormwater runoff to sheet flow below the turf to the detention system. The plastic detention system will be connected to the plastic grid below the turf, making conveyance below the baseball fields unnecessary.

6.0 SPECIAL REPORTS AND STUDIES

No other reports or special studies have been performed for this project at the time of this report.

A Site Preparation plan has been included as part of the project plans and shows proposed temporary erosion and sediment control best management practices (BMPs). The contractor will be required to prepare a project Stormwater Pollution Prevention Plan (SWPPP) before construction begins to ensure that proper erosion and sediment control BMPs will be used during construction.

7.0 OTHER PERMITS

This project will disturb more than one acre of land and will therefore be required to obtain an NPDES Permit and will need to file a Notice of Intent with the Department of Ecology.

8.0 CSWPPP ANALYSIS AND DESIGN

The project plans will include site preparation sheets showing temporary erosion and sediment control BMPs necessary for construction. This project is located in a relatively flat area and has a very low potential for

erosion, however measures will need to be taken to ensure that sediment is prevented from leaving the project site since a creek is immediately downstream of the project low point.

Table 8.1 below summarizes how erosion and sediment control will be addressed during construction of this project.

Table 8.1 - Summary of ESC Measures

ESC Category	Proposed Measures
Clearing Limits	The clearing limits on the north and west sides of the project are bound by existing roadway which will remain in place during construction. The east clearing limit will be marked by high visibility construction fencing to protect the existing wetland. The south clearing limits will be marked by silt fence.
Cover Measures	There are no steep slopes on the construction site. If a steep slope is encountered, straw wattle can be used to reduce runoff velocities. Areas that will not be paved or turf after construction should be seeded or sodded as soon as possible.
Perimeter Protection	Silt fence or wattle will be used on the perimeter of the clearing limits in the locations where the adjacent ground is downslope of the project site. Sediment build-up at silt fences and wattles will removed when sediment is 6" high at silt fence or 3" from the top of the wattle.
Traffic Area Stabilization	Stabilized construction entrances will be installed at all construction vehicle access points.
Sediment Retention	Silt fence and wattle installed around the project perimeter should be sufficient for sediment retention because the project site is so flat and runoff will flow over undisturbed grass before reaching the silt fence, reducing flow velocities even more and removing sediment along the way. If groundwater is encountered, a sediment trap will be needed to retain sediment laden runoff pumped from excavated areas.
Surface Water Collection	The majority of the site is completely flat and will either infiltrate into the native soil, or will need to be pumped if it becomes a nuisance to construction efforts. A temporary ditch to the west of the baseball field with a level spreader at the end may be used to convey runoff from the parking and path areas off of the site.
Dewatering Control	It is unknown if groundwater will be encountered during construction, however, if it is, it will likely accumulate in the excavated pit for the detention system. This water will need to be pumped from the pit into a sediment trap.
Dust Control	If dust become a problem, the contractor will spray water on exposed soils without creating runoff.
ESC Category	**Proposed Measures**
Flow Control	The project detention facility will most likely be constructed before anything else on the site and can be used to mitigate flow control during construction of the rest of the site. Sediment must be kept from entering the detention facility during construction.

None of the proposed erosion control facilities are required to be sized or designed by an engineer. If a sediment pond is deemed necessary during construction, it will be sized at that time. See the Site Preparation Plans for the locations of the temporary erosion control elements mentioned above.

9.0 BOND QUANTITIES, FACILITY SUMMARIES, AND DECLARATION OF COVENANT

The bond quantities worksheet is not required for this project because it is entirely owned and will be entirely maintained by the City of Kenmore. In lieu of a sketch, drainage plan sheets and design calculations have been included at the end of this report.

Draft declaration of covenants are not required for this project since there are no flow control facilities and the water quality facilities are located on public right-of-way and will be publicly maintained.

10.0 OPERATIONS AND MAINTENANCE MANUAL

Maintenance requirements for all proposed stormwater related facilities will be included as an appendix in a later version of this report, including manufacturer's maintenance recommendations. At a minimum, all stormwater facilities should be inspected annually using the checklists included.

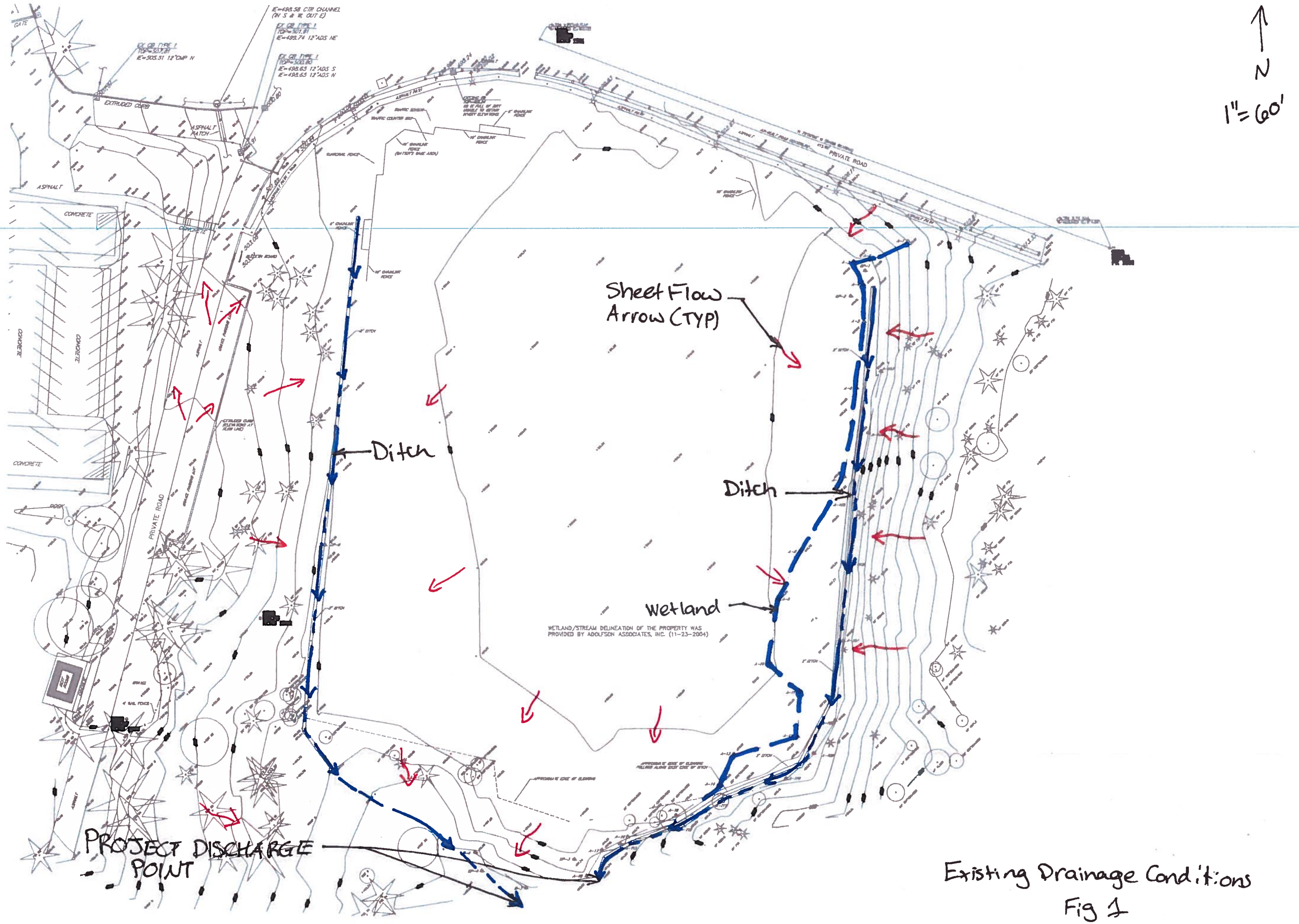

Existing Drainage Conditions
Fig 1

Gravel	3,702 SF
NPGIS	2,065 SF
Pervious	218,274 SF

Existing Land Use Types
Fig. 2

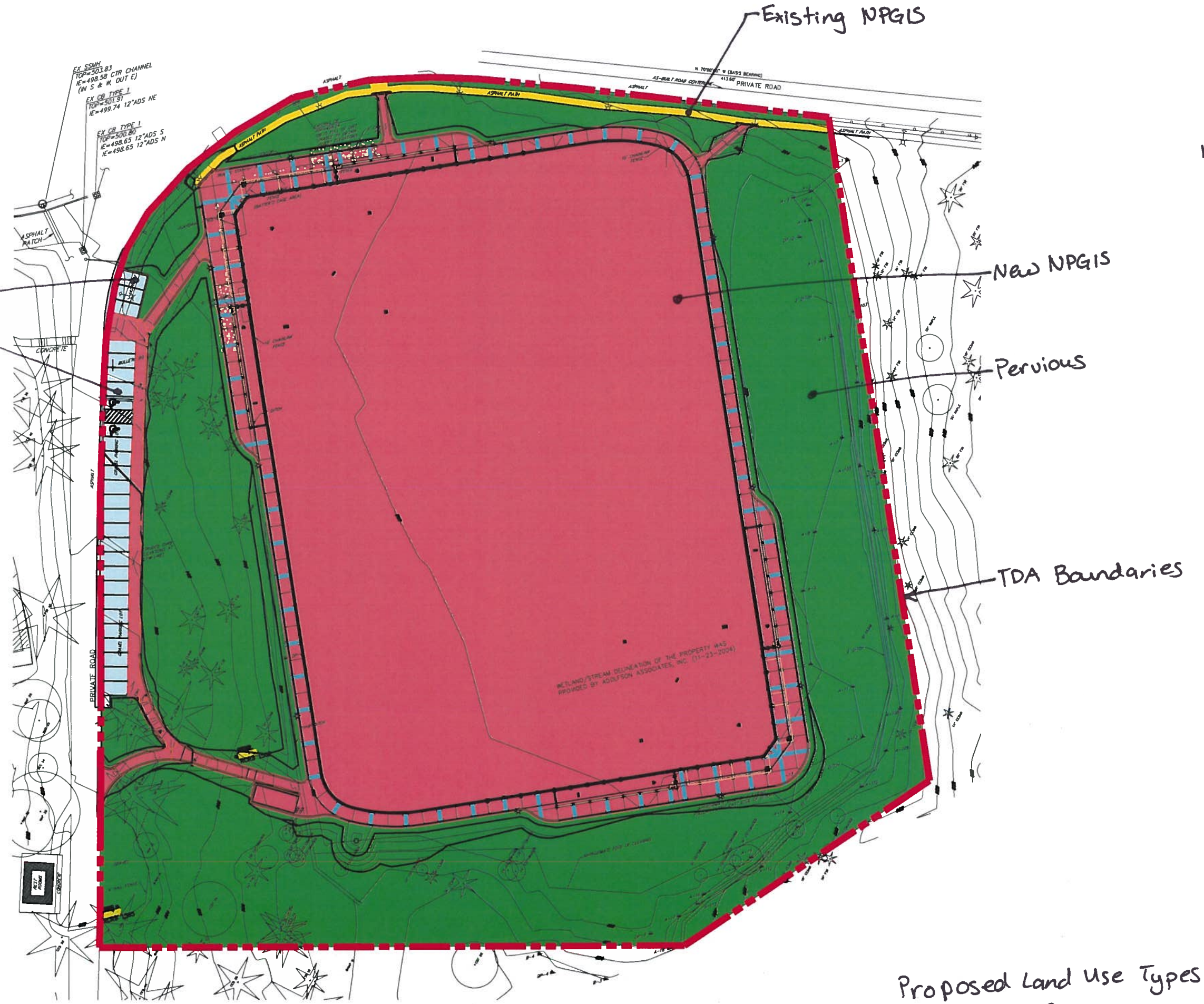

Gravel	0 SF
New PGIS	4,890 SF
Exist NPGIS	1,625 SF
New NPGIS	121,315 SF
Pervious	96,211 SF

Proposed Land Use Types
Fig. 3

N

1"=600'

UPSTREAM BASIN MAP
FIG 4

N

1"=60'

DOWNSTREAM ROUTE MAP

FIG 5

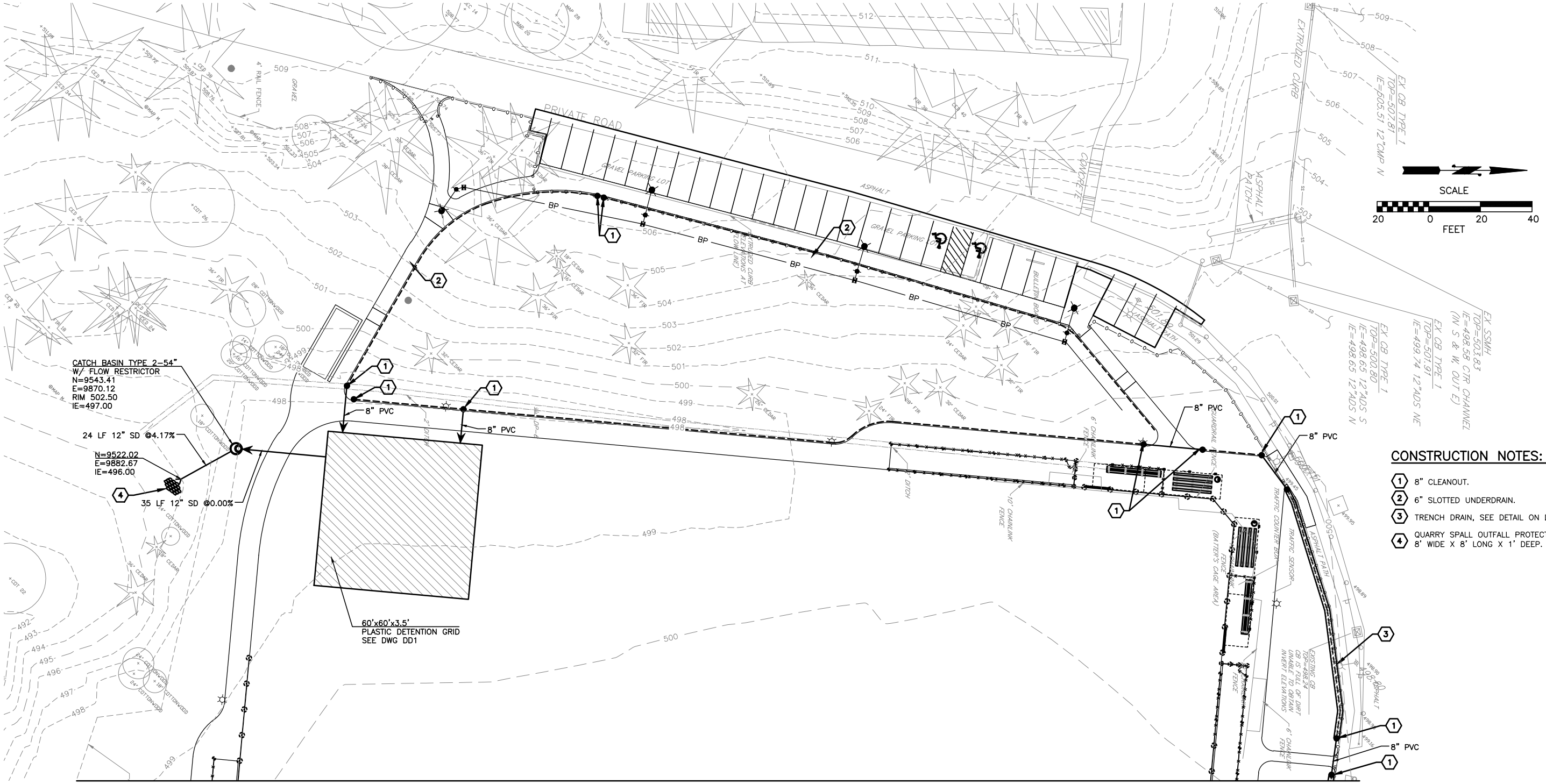

CONSTRUCTION NOTES:

1. 8" CLEANOUT.
2. 6" SLOTTED UNDERDRAIN.
3. TRENCH DRAIN, SEE DETAIL ON DWG DD1.
4. QUARRY SPALL OUTFALL PROTECTION, 8' WIDE X 8' LONG X 1' DEEP.

CALL 2 BUSINESS DAYS BEFORE YOU DIG
1 800 424 5555
UTILITIES UNDERGROUND LOCATION CENTER

No.	Date	Revision	By	Appr.

Perteet
425-252-7700 | 1-800-915-9959
21707 Cedar Avenue, Suite 200
Everett, Washington 98201

KENMORE WASHINGTON

60% SUBMITTAL
NOT FOR CONSTRUCTION

Drawn By MMC	Date 02/12/16	
Designed By MJ	02/12/16	
Checked By DS	02/12/16	
Approved By		Project Number 20120170.035

CITY OF KENMORE
ST. EDWARD STATE PARK SPORTS FIELD
DRAINAGE PLAN

Drawing No. DR1
Sheet No. of Total

Jul 08, 2016 - 1:07pm Jbean X:\Kenmore, City of\Projects\20120170 - Professional Services Contract 12-C1082\035 - St. Edwards Park Sports Fields\CADD\Plan Sheets\20120170.035-DR.dwg Layout Name: DR1

MATCHLINE SEE SHEET DR1

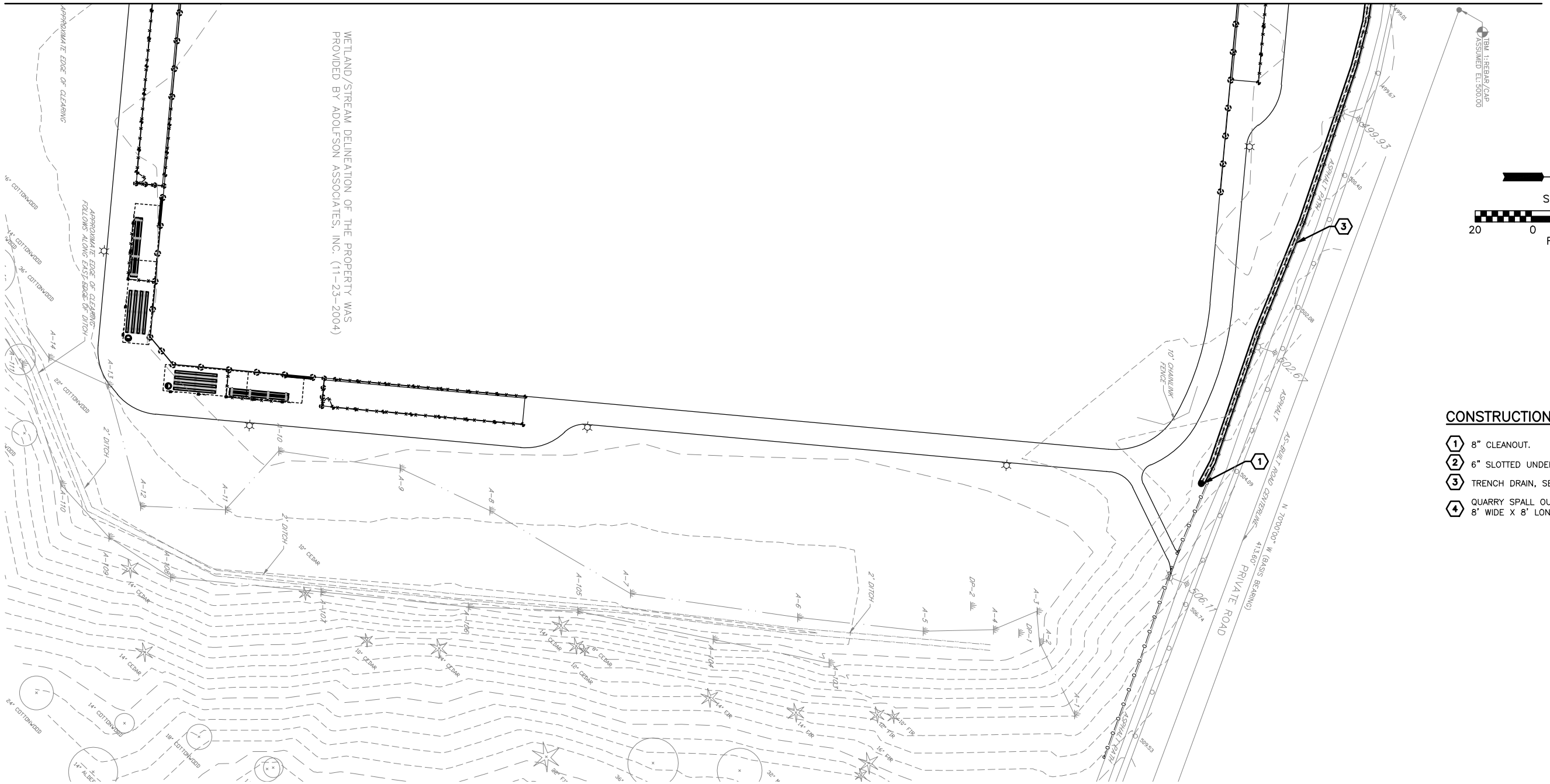

SCALE

20 0 20 40

FEET

CONSTRUCTION NOTES:

1. 8" CLEANOUT.
2. 6" SLOTTED UNDERDRAIN.
3. TRENCH DRAIN, SEE DETAIL ON DWG DD1.
4. QUARRY SPALL OUTFALL PROTECTION, 8' WIDE X 8' LONG X 1' DEEP.

CALL 2 BUSINESS DAYS BEFORE YOU DIG

1 800 424 5555

UTILITIES UNDERGROUND LOCATION CENTER

No.	Date	Revision	By	Appr.

Perteet

425-252-7700 | 1-800-815-9920

2707 Colby Avenue, Suite 500

Everett, Washington 98201

KENMORE BY THE LAKE

60% SUBMITTAL
NOT FOR CONSTRUCTION

Drawn By	MMC	Date 02/12/16
Designed By	MJ	02/12/16
Checked By	DS	02/12/16
Approved By		

Project Number 20120170.035

CITY OF KENMORE

ST. EDWARD STATE PARK SPORTS FIELD

DRAINAGE PLAN

Drawing No. DR2

Sheet No. of Total

Jul 08, 2016 - 1:07pm Jbean X:\Kenmore, City of\Projects\20120170 - Professional Services Contract 12-C1082\.035 - St. Edwards Park Sports Fields\CADD\Plan Sheets\20120170.035-DR.dwg Layout Name: DR2

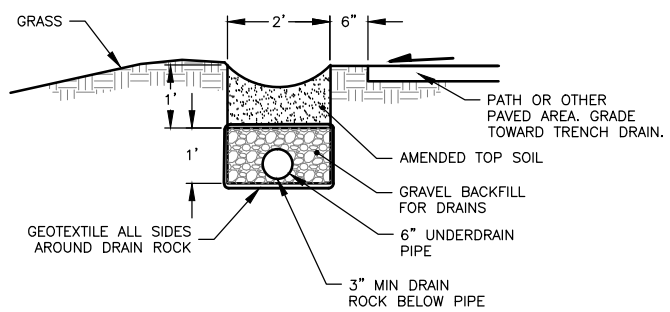

TRENCH DRAIN

N.T.S

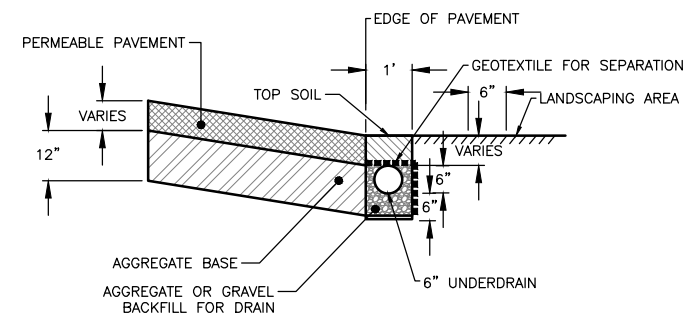

UNDERDRAIN

N.T.S

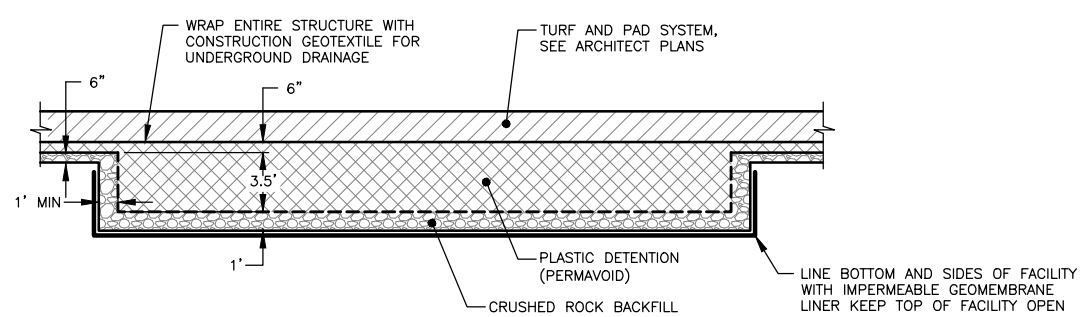

PLASTIC DETENTION GRID DETAIL

N.T.S

CALL 2 BUSINESS DAYS BEFORE YOU DIG

1 800 424 5555

UTILITIES UNDERGROUND LOCATION CENTER

No.	Date	Revision	By	Appr.

Perteet

[illegible]

[illegible]

60% SUBMITTAL
NOT FOR CONSTRUCTION

Drawn By	MMC	Date 02/12/16
Designed By	MJ	02/12/16
Checked By	DS	02/12/16
Approved By		

Project Number 20120170.035

CITY OF KENMORE

ST. EDWARD STATE PARK SPORTS FIELD

DRAINAGE DETAILS

Drawing No. DD1

Sheet No. of Total

Jul 08, 2016 - 1:08pm Jbean X:\Kenmore, City of\Projects\20120170 - Professional Services Contract 12-C1082\035 - St. Edwards Park Sports Fields\CADD\Plan Sheets\20120170.035-DD.dwg Layout Name: DD1

WWHM4
PROJECT REPORT

Project Name: Detention Volume_2016-06-30
Site Name : Saint Edwards Park
Site Address:
City : Kenmore
Report Date : 7/6/2016
Gage : Seatac
Data Start : 1948/10/01
Data End : 1998/09/30
Precip Scale: 0.83
Version : 2011/12/23

PREDEVELOPED LAND USE

Name : Basin 1
Bypass: No

GroundWater: No

Pervious Land Use	Acres
C, Lawn, Flat	3.66

Impervious Land Use	Acres

Element Flows To:

Surface	Interflow	Groundwater

MITIGATED LAND USE

Name : Basin 1
Bypass: No

GroundWater: No

Pervious Land Use	Acres
C, Lawn, Flat	2.81

Impervious Land Use	Acres
ROADS FLAT	0.11
SIDEWALKS FLAT	0.74

Element Flows To:

Surface	Interflow	Groundwater
Vault 1	Vault 1	

Name : Vault 1
Width : 60 ft.
Length : 60 ft.
Depth: 4 ft.
Discharge Structure
Riser Height: 3 ft.
Riser Diameter: 18 in.
Notch Type : Rectangular
Notch Width : 0.036 ft.
Notch Height: 1.287 ft.
Orifice 1 Diameter: 1.375 in. **Elevation:** 0 ft.

Element Flows To:
Outlet 1 **Outlet 2**

Vault Hydraulic Table

Stage(ft)	Area(ac)	Volume(ac-ft)	Discharge(cfs)	Infilt(cfs)
0.0000	0.082	0.000	0.000	0.000
0.0444	0.082	0.003	0.010	0.000
0.0889	0.082	0.007	0.014	0.000
0.1333	0.082	0.011	0.018	0.000
0.1778	0.082	0.014	0.020	0.000
0.2222	0.082	0.018	0.023	0.000
0.2667	0.082	0.022	0.025	0.000
0.3111	0.082	0.025	0.027	0.000
0.3556	0.082	0.029	0.029	0.000
0.4000	0.082	0.033	0.031	0.000
0.4444	0.082	0.036	0.033	0.000
0.4889	0.082	0.040	0.034	0.000
0.5333	0.082	0.044	0.036	0.000
0.5778	0.082	0.047	0.037	0.000
0.6222	0.082	0.051	0.039	0.000
0.6667	0.082	0.055	0.040	0.000
0.7111	0.082	0.058	0.041	0.000
0.7556	0.082	0.062	0.043	0.000
0.8000	0.082	0.066	0.044	0.000
0.8444	0.082	0.069	0.045	0.000
0.8889	0.082	0.073	0.046	0.000
0.9333	0.082	0.077	0.048	0.000
0.9778	0.082	0.080	0.049	0.000
1.0222	0.082	0.084	0.050	0.000
1.0667	0.082	0.088	0.051	0.000
1.1111	0.082	0.091	0.052	0.000
1.1556	0.082	0.095	0.053	0.000
1.2000	0.082	0.099	0.054	0.000
1.2444	0.082	0.102	0.055	0.000
1.2889	0.082	0.106	0.056	0.000
1.3333	0.082	0.110	0.057	0.000
1.3778	0.082	0.113	0.058	0.000
1.4222	0.082	0.117	0.059	0.000

1.4667	0.082	0.121	0.060	0.000
1.5111	0.082	0.124	0.061	0.000
1.5556	0.082	0.128	0.061	0.000
1.6000	0.082	0.132	0.062	0.000
1.6444	0.082	0.135	0.063	0.000
1.6889	0.082	0.139	0.064	0.000
1.7333	0.082	0.143	0.065	0.000
1.7778	0.082	0.146	0.068	0.000
1.8222	0.082	0.150	0.071	0.000
1.8667	0.082	0.154	0.074	0.000
1.9111	0.082	0.157	0.078	0.000
1.9556	0.082	0.161	0.083	0.000
2.0000	0.082	0.165	0.087	0.000
2.0444	0.082	0.169	0.092	0.000
2.0889	0.082	0.172	0.097	0.000
2.1333	0.082	0.176	0.102	0.000
2.1778	0.082	0.180	0.108	0.000
2.2222	0.082	0.183	0.113	0.000
2.2667	0.082	0.187	0.119	0.000
2.3111	0.082	0.191	0.124	0.000
2.3556	0.082	0.194	0.130	0.000
2.4000	0.082	0.198	0.136	0.000
2.4444	0.082	0.202	0.142	0.000
2.4889	0.082	0.205	0.148	0.000
2.5333	0.082	0.209	0.154	0.000
2.5778	0.082	0.213	0.160	0.000
2.6222	0.082	0.216	0.166	0.000
2.6667	0.082	0.220	0.172	0.000
2.7111	0.082	0.224	0.178	0.000
2.7556	0.082	0.227	0.185	0.000
2.8000	0.082	0.231	0.192	0.000
2.8444	0.082	0.235	0.200	0.000
2.8889	0.082	0.238	0.208	0.000
2.9333	0.082	0.242	0.215	0.000
2.9778	0.082	0.246	0.223	0.000
3.0222	0.082	0.249	0.276	0.000
3.0667	0.082	0.253	0.479	0.000
3.1111	0.082	0.257	0.770	0.000
3.1556	0.082	0.260	1.126	0.000
3.2000	0.082	0.264	1.536	0.000
3.2444	0.082	0.268	1.996	0.000
3.2889	0.082	0.271	2.499	0.000
3.3333	0.082	0.275	3.043	0.000
3.3778	0.082	0.279	3.624	0.000
3.4222	0.082	0.282	4.241	0.000
3.4667	0.082	0.286	4.891	0.000
3.5111	0.082	0.290	5.572	0.000
3.5556	0.082	0.293	6.284	0.000
3.6000	0.082	0.297	7.025	0.000
3.6444	0.082	0.301	7.793	0.000
3.6889	0.082	0.304	8.589	0.000
3.7333	0.082	0.308	9.411	0.000
3.7778	0.082	0.312	10.25	0.000
3.8222	0.082	0.315	11.13	0.000
3.8667	0.082	0.319	12.02	0.000
3.9111	0.082	0.323	12.94	0.000
3.9556	0.082	0.326	13.88	0.000

4.0000	0.082	0.330	14.84	0.000
4.0444	0.082	0.334	15.83	0.000
4.0889	0.000	0.000	16.84	0.000

ANALYSIS RESULTS

Flow Frequency Return Periods for Predeveloped. POC #1

Return Period	Flow(cfs)
2 year	0.120453
5 year	0.192637
10 year	0.243623
25 year	0.310481
50 year	0.361585
100 year	0.41352

Flow Frequency Return Periods for Mitigated. POC #1

Return Period	Flow(cfs)
2 year	0.079037
5 year	0.130591
10 year	0.175489
25 year	0.2468
50 year	0.31212
100 year	0.389359

Annual Peaks for Predeveloped and Mitigated. POC #1

Year	Predeveloped	Mitigated
1949	0.139	0.060
1950	0.372	0.101
1951	0.234	0.264
1952	0.090	0.051
1953	0.069	0.052
1954	0.105	0.078
1955	0.156	0.107
1956	0.158	0.111
1957	0.149	0.064
1958	0.111	0.080
1959	0.088	0.062
1960	0.200	0.196
1961	0.098	0.062
1962	0.061	0.048
1963	0.101	0.071
1964	0.113	0.065
1965	0.093	0.075
1966	0.096	0.058
1967	0.188	0.089
1968	0.101	0.059
1969	0.104	0.060
1970	0.103	0.061
1971	0.108	0.080
1972	0.237	0.170
1973	0.088	0.062
1974	0.094	0.072
1975	0.195	0.091

1976	0.112	0.086
1977	0.021	0.037
1978	0.099	0.061
1979	0.055	0.046
1980	0.141	0.141
1981	0.119	0.058
1982	0.278	0.194
1983	0.123	0.090
1984	0.099	0.052
1985	0.055	0.051
1986	0.213	0.170
1987	0.203	0.188
1988	0.078	0.055
1989	0.044	0.040
1990	0.384	0.344
1991	0.315	0.213
1992	0.101	0.064
1993	0.090	0.061
1994	0.038	0.037
1995	0.120	0.108
1996	0.266	0.254
1997	0.216	0.221
1998	0.086	0.054

Ranked Annual Peaks for Predeveloped and Mitigated. POC #1

Rank	**Predeveloped**	**Mitigated**
1	0.3840	0.3438
2	0.3718	0.2640
3	0.3148	0.2543
4	0.2783	0.2213
5	0.2656	0.2127
6	0.2370	0.1955
7	0.2341	0.1938
8	0.2156	0.1878
9	0.2135	0.1702
10	0.2030	0.1697
11	0.2004	0.1412
12	0.1954	0.1114
13	0.1882	0.1084
14	0.1585	0.1067
15	0.1556	0.1005
16	0.1495	0.0911
17	0.1414	0.0897
18	0.1392	0.0886
19	0.1235	0.0862
20	0.1201	0.0798
21	0.1188	0.0798
22	0.1126	0.0780
23	0.1116	0.0747
24	0.1111	0.0724
25	0.1084	0.0710
26	0.1054	0.0646
27	0.1044	0.0640
28	0.1034	0.0638
29	0.1009	0.0624
30	0.1006	0.0620

31	0.1006	0.0616
32	0.0987	0.0609
33	0.0986	0.0609
34	0.0977	0.0605
35	0.0962	0.0604
36	0.0943	0.0602
37	0.0929	0.0590
38	0.0902	0.0578
39	0.0899	0.0575
40	0.0881	0.0553
41	0.0876	0.0539
42	0.0862	0.0519
43	0.0777	0.0517
44	0.0693	0.0515
45	0.0608	0.0512
46	0.0547	0.0480
47	0.0545	0.0456
48	0.0440	0.0399
49	0.0380	0.0373
50	0.0209	0.0373

POC #1
The Facility PASSED

The Facility PASSED.

Flow(cfs)	Predev	Mit	Percentage	Pass/Fail
0.0602	3340	2783	83	Pass
0.0633	2970	2028	68	Pass
0.0663	2625	1629	62	Pass
0.0694	2344	1454	62	Pass
0.0724	2109	1318	62	Pass
0.0754	1889	1201	63	Pass
0.0785	1705	1083	63	Pass
0.0815	1552	979	63	Pass
0.0846	1413	890	62	Pass
0.0876	1258	810	64	Pass
0.0907	1139	734	64	Pass
0.0937	1028	682	66	Pass
0.0968	938	640	68	Pass
0.0998	860	590	68	Pass
0.1028	787	552	70	Pass
0.1059	721	517	71	Pass
0.1089	663	475	71	Pass
0.1120	611	436	71	Pass
0.1150	551	403	73	Pass
0.1181	503	379	75	Pass
0.1211	461	355	77	Pass
0.1242	417	333	79	Pass
0.1272	384	317	82	Pass
0.1302	358	302	84	Pass
0.1333	330	278	84	Pass
0.1363	301	263	87	Pass
0.1394	275	238	86	Pass
0.1424	260	220	84	Pass
0.1455	244	208	85	Pass

0.1485	227	194	85	Pass
0.1515	211	187	88	Pass
0.1546	196	170	86	Pass
0.1576	183	164	89	Pass
0.1607	167	151	90	Pass
0.1637	153	143	93	Pass
0.1668	140	132	94	Pass
0.1698	125	121	96	Pass
0.1729	108	112	103	Pass
0.1759	102	95	93	Pass
0.1789	89	86	96	Pass
0.1820	83	78	93	Pass
0.1850	65	71	109	Pass
0.1881	60	60	100	Pass
0.1911	55	51	92	Pass
0.1942	47	44	93	Pass
0.1972	45	38	84	Pass
0.2003	39	34	87	Pass
0.2033	35	31	88	Pass
0.2063	31	26	83	Pass
0.2094	29	23	79	Pass
0.2124	27	19	70	Pass
0.2155	24	16	66	Pass
0.2185	21	14	66	Pass
0.2216	21	12	57	Pass
0.2246	21	11	52	Pass
0.2276	19	11	57	Pass
0.2307	17	11	64	Pass
0.2337	15	11	73	Pass
0.2368	11	9	81	Pass
0.2398	9	9	100	Pass
0.2429	9	8	88	Pass
0.2459	9	7	77	Pass
0.2490	9	7	77	Pass
0.2520	9	6	66	Pass
0.2550	9	5	55	Pass
0.2581	9	5	55	Pass
0.2611	9	4	44	Pass
0.2642	9	2	22	Pass
0.2672	8	2	25	Pass
0.2703	8	2	25	Pass
0.2733	7	2	28	Pass
0.2764	7	2	28	Pass
0.2794	6	2	33	Pass
0.2824	6	2	33	Pass
0.2855	6	2	33	Pass
0.2885	6	2	33	Pass
0.2916	6	2	33	Pass
0.2946	6	2	33	Pass
0.2977	6	2	33	Pass
0.3007	6	2	33	Pass
0.3037	6	2	33	Pass
0.3068	6	2	33	Pass
0.3098	6	2	33	Pass
0.3129	6	2	33	Pass
0.3159	5	2	40	Pass
0.3190	5	2	40	Pass

0.3220	5	2	40	Pass
0.3251	5	2	40	Pass
0.3281	5	2	40	Pass
0.3311	4	2	50	Pass
0.3342	4	2	50	Pass
0.3372	4	2	50	Pass
0.3403	4	1	25	Pass
0.3433	4	1	25	Pass
0.3464	4	0	0	Pass
0.3494	4	0	0	Pass
0.3525	4	0	0	Pass
0.3555	3	0	0	Pass
0.3585	3	0	0	Pass
0.3616	2	0	0	Pass

Water Quality BMP Flow and Volume for POC #1
On-line facility volume: 0 **acre-feet**
On-line facility target flow: 0 **cfs.**
Adjusted for 15 min: 0 **cfs.**
Off-line facility target flow: 0 **cfs.**
Adjusted for 15 min: 0 **cfs.**

Perlnd and Implnd Changes
No changes have been made.

This program and accompanying documentation is provided 'as-is' without warranty of any kind. The entire risk regarding the performance and results of this program is assumed by the user. Clear Creek Solutions, Inc. disclaims all warranties, either expressed or implied, including but not limited to implied warranties of program and accompanying documentation. In no event shall Clear Creek Solutions, Inc. be liable for any damages whatsoever (including without limitation to damages for loss of business profits, loss of business information, business interruption, and the like) arising out of the use of, or inability to use this program even if Clear Creek Solutions, Inc. has been advised of the possibility of such damages.

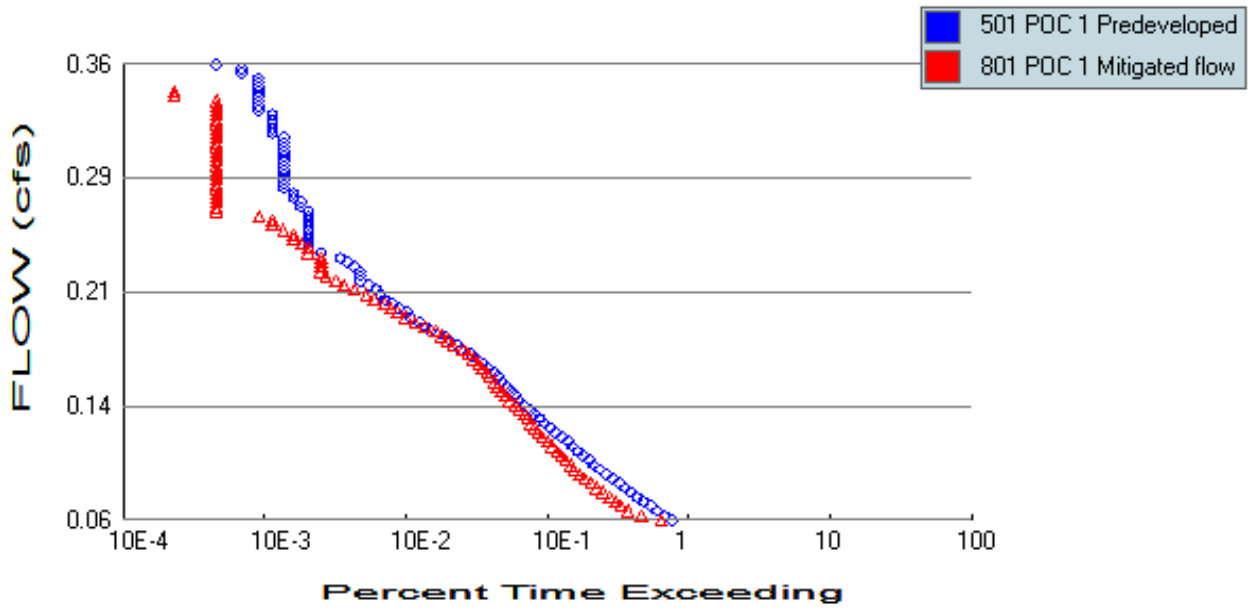
501 POC 1 Predeveloped
801 POC 1 Mitigated flow
FLOW (cfs)
0.36
0.29
0.21
0.14
0.06
10E-4
10E-3
10E-2
10E-1
1
10
100
Percent Time Exceeding

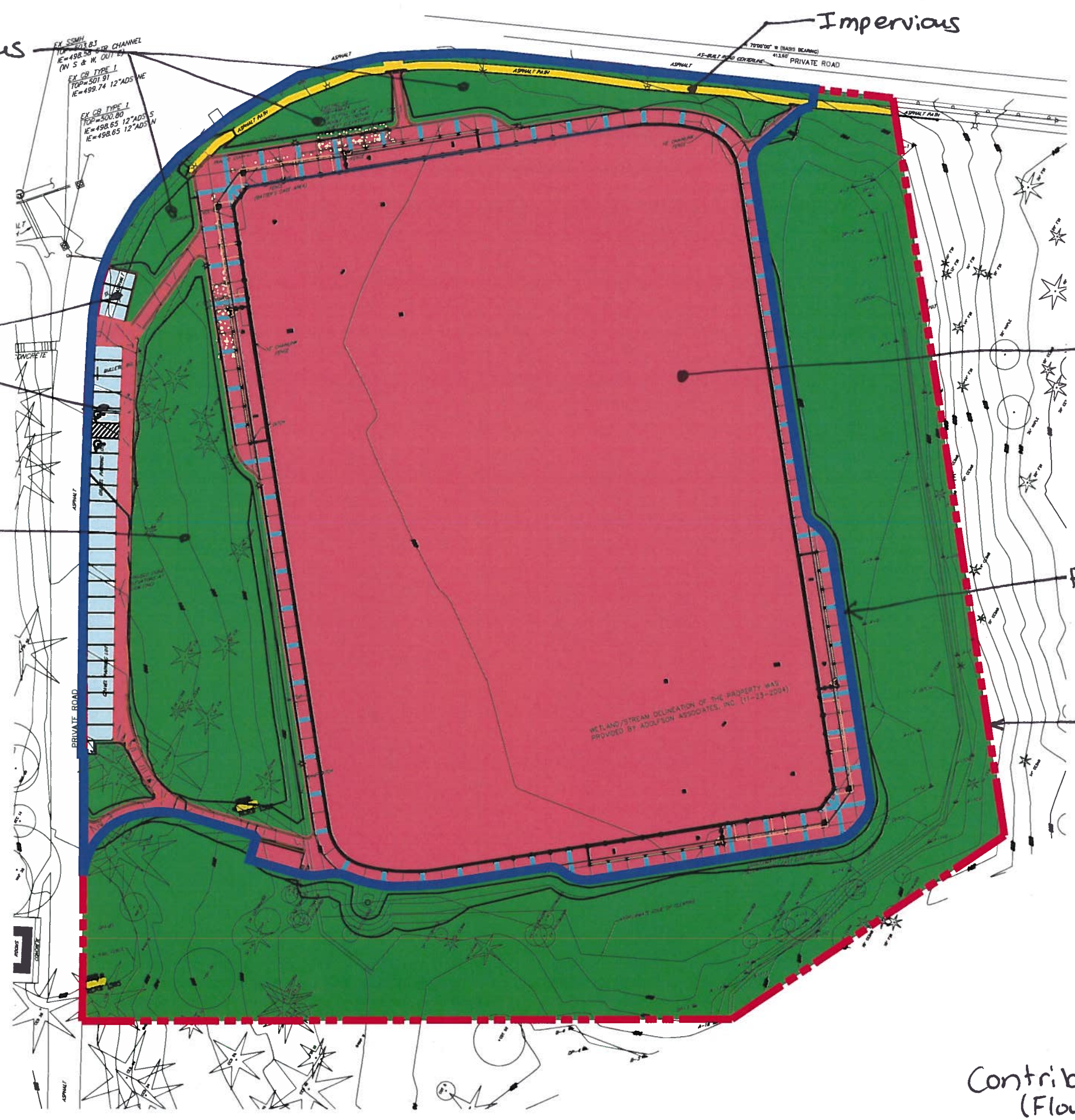

Impervious	6,515 SF
Porous Pave/ Turf	121,315 SF
Pervious	96,211 SF

Contributing Areas Map
(Flow Control)